NOTES:

1. FINISH 125 EXCEPT AS NOTED.
2. ALL EDGES SHALL BE BROKEN .010 MAX UNLESS OTHERWISE SPECIFIED.
3. MATERIAL: STEEL, CORROSION RESISTING FED SPEC QQ-S-763: CLASS 420, CONDITION A EXCEPT: COPPER 0.50% MAX.
4. HEAT TREATMENT: HEAT AT 1800°-1850°F. AIR QUENCH. TEMPER 30 MINUTES AT A MINIMUM TEMPERATURE OF 850°F, TO HARDNESS SPECIFIED. HEAT TREATMENT METHOD IS FOR GUIDANCE EXCEPT THAT TEMPERING TIME SHALL NOT BE REDUCED BELOW THAT SPECIFIED.
5. MIL-W-13855 SHALL APPLY.

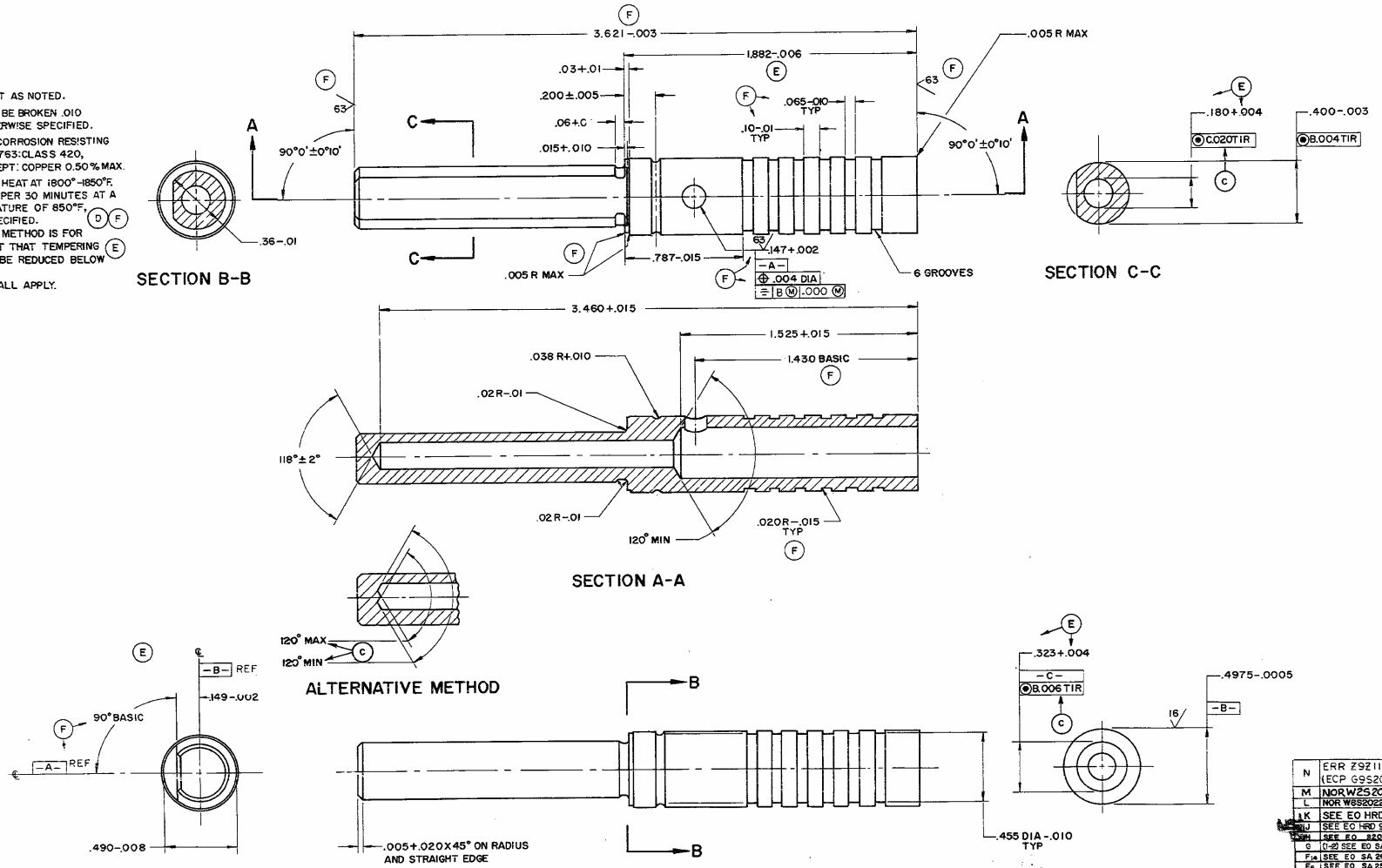

D7267047

SYM	DESCRIPTION	DATE	APPROVAL
N	ERR Z9Z1171AF (ECP G9S2024/990518)	891010	
M	NOR W2S2025	89-04-20	
L	NOR W8S2022/79-03-26	790401	
K	SEE EO HRD 02138	71FEB25	
J	SEE EO HRD 92078-2	25JUN68	
H	SEE EO 82048	11MAR68	
G	(1-2) SEE EO SA 29261	18MAY66	
F14	SEE EO SA 26507	11MAR63	
E5	SEE EO SA 25980	23DEC60	
D1	SEE EO SA 25511	15JAN60	
C3	SEE EO SA 24763	12SEP58	
B	REDRAWN AND REVISED		
	SEE EO SA 24529	10JUL58	
A		24FEB55	

REVISIONS

CURRENT DESIGN ACTIVITY FSCM NO.19200
US ARMY ARMAMENT RESEARCH AND DEVELOPMENT CENTER
DOVER, NEW JERSEY 07801

PART NO. 7267047

PHYSICAL PROPERTIES		
TP		
TS		
EL 2	F 7267000	RIFLE, M14
RA		
BH	NEXT ASSY	USED ON
RN	A74.5-77	

APPLICATION: DO NOT APPLY PART NO.

TOLERANCES ON DECIMALS ANGLES ±1° FRACTIONS
MATERIAL: SEE NOTE 3
HEAT TREATMENT: SEE NOTE 4
FINAL PROTECTIVE FINISH: NONE

ORIGINAL DATE OF DRAWING: 4 OCT 1954
DRAFTSMAN: CHECKER: E.Z.C.
TRACER: C. McC. CHECKER: E.Z.C.
ENGINEER: ENGINEER:
SUBMITTED: R. S. Henry ORD CORPS
APPROVED BY ORDER OF THE CHIEF OF ORDNANCE: H. F. Lynch ORD CORPS

PISTON

CODE IDENT NO. 19205
SCALE 3/1 UNIT WT

SPRINGFIELD ARMORY, SPRINGFIELD, MA

DWG SIZE D 7267047
SHEET 1 OF 1

RMH