UNITED STATES RIFLES AND MACHINE GUNS

COLVIN and VIALL

GIFT OF
School of
Military Aeronautics

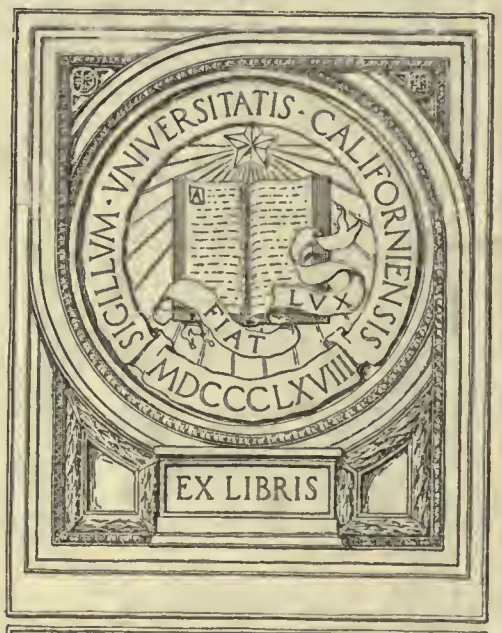

Digitized by the Internet Archive
in 2007 with funding from
Microsoft Corporation

http://www.archive.org/details/unitedstatesrifl00colvrich

UNITED STATES RIFLES
AND
MACHINE GUNS

McGraw-Hill Book Co. Inc.

PUBLISHERS OF BOOKS FOR

Coal Age ▿ Electric Railway Journal
Electrical World ▿ Engineering News-Record
Railway Age Gazette ▿ American Machinist
Electrical Merchandising ▿ The Contractor
Engineering & Mining Journal ▿ Power
Metallurgical & Chemical Engineering

UNITED STATES RIFLES AND MACHINE GUNS

A DETAILED ACCOUNT OF THE METHODS USED IN MANUFACTURING THE SPRINGFIELD, 1903 MODEL SERVICE RIFLE; ALSO DESCRIPTIONS OF THE MODIFIED ENFIELD RIFLE AND THREE TYPES OF MACHINE GUNS.

BY

FRED H. COLVIN

AND

ETHAN VIALL

ASSOCIATE EDITORS AMERICAN MACHINIST
MEMBERS AMERICAN SOCIETY OF MECHANICAL ENGINEERS
MEMBERS FRANKLIN INSTITUTE

FIRST EDITION

UNIV. OF CALIFORNIA

McGRAW-HILL BOOK COMPANY, INC.
239 WEST 39TH STREET. NEW YORK

LONDON: HILL PUBLISHING CO., LTD.
6 & 8 BOUVERIE ST., E. C.

1917

Copyright, 1917, by the McGraw-Hill Book Company, Inc.

PREFACE

The accompanying description of the methods used at the Springfield Armory in manufacturing the Springfield, 1903 Model Service Rifle was undertaken at the request of the Ordnance Bureau of the United States Army for the purpose of assisting manufacturers in undertaking large contracts for this arm should necessity arise. The immediate necessity arrived before this plan could be carried out, but as the Springfield still remains the standard arm of the United States Army, the work remains of value for the future. The methods shown are those in use during the fall of 1916, some of these being since modified in accordance with manufacturing requirements.

It is believed that this is the first instance of such an amount of detailed information being gathered into such a small compass where it is so readily available for use. The perspective drawings of operations are all from photographs, over 1000 being taken for this purpose. Credit for the plan of securing the material in this form belongs to John H. Van Deventer, Editor of the American Machinist, and we also desire to thank Col. W. S. Peirce, Maj. G. H. Stewart, Capt. R. R. Nix, T. H. Fletcher and Harry R. Johnson for valuable assistance in securing the material here presented.

While this was secured primarily for its value to makers of military rifles, it is hoped and believed that it will be found useful to other manufacturers making parts which in some way resemble those shown. Some of the uses of the profiler and miller should be available in other classes of manufacture.

We have also included the descriptions of the operation and mechanisms of the modified Enfield, the United States Machine Rifle, the Lewis Machine Gun, and the Vickers Machine Gun.

THE AUTHORS

CONTENTS

	Page
Preface	v
The Evolution of the American Military Rifle	1
General Specifications and Barrel Operations	9
Operations on the Barrel and the Fixed Stud	20
The Fixed Base and Final Barrel Operations	31
Operations on the Receiver	41
Operations on the Receiver (*Continued*)	50
Machining Operations on the Bolt	81
Operations on the Bolt (*Continued*)	89
Operations on the Sleeve	106
Operations on the Sleeve (*Continued*)	114
The Cocking Piece	123
Striker, Mainspring and Extractor	131
Safety-Lock Spindle and Plunger	149
Making the Guard	155
Sear, Trigger and Floor Plate	167
Floor-Plate Catch, Magazine Spring, Cutoff and Follower	175
Movable Stud—Front Sight and Movable Base	187
Slide and Cap	202
Drift Slides, Windage Screw, and Butt Plate	209
Stacking Swivel, Hand-Guard Clip, Front-Sight Cover, Cleaning Rods	231
Oiler and Thong Case, Spare-Parts Container, Screw Driver	233
Making the Stock	244
Operations on the Hand Guard	269
The Bayonet	283
Bayonet Catch, Grip, Guard, Scabbard-Catch, Etc	292
The Modified Enfield Rifle	303
U. S. Automatic Machine Rifle	305
The Lewis Machine Gun	315
The Vickers Machine Gun	320
Index	329

The Evolution of the American Military Rifle

By Ethan Viall

SYNOPSIS—While a brief outline is given of early small-arm developments, the main interest centers around the American military rifle, and especially on the gun made in the Springfield armory, which is the oldest in the United States. It is from this arsenal that the present as well as most of the past army rifles take their name.

The actual date of the first hand firearm is uncertain, but its appearance was at about the same time as that of the breech-loading cannon, both being of large bore and invented close to the beginning of the fourteenth century. Artillery is known to have been used in European warfare as early as 1327.

The first real improvement seems to have been along the line of locks, after which a reduction of weight took an important part. The hand cannon of the early part of the fourteenth century was at first very crude, simply being fastened to a block of wood, and was too large to be fired from the shoulder. The vent, or touch-hole, was on the top of the barrel, and the first improvement of this model was a cover over the vent to keep the powder dry. The portable hand cannon immediately followed and was made from the middle to the end of the fourteenth century. This style differs from the first in having some shape to the wood block, which is not unlike a stock, and it was capable of being shot by a strong man.

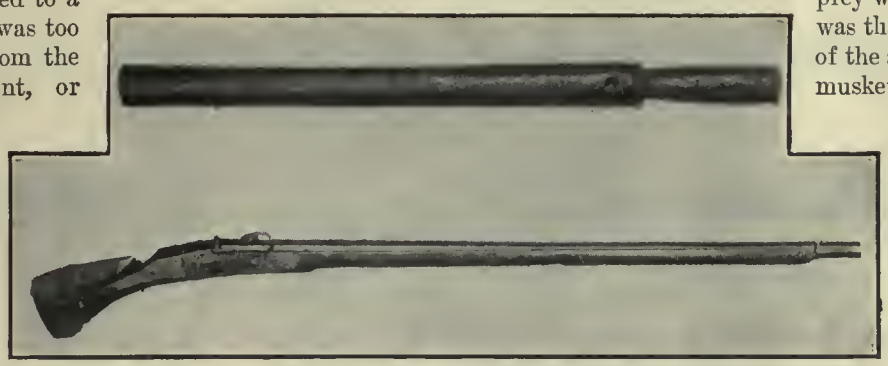

FIG. 1. PRIMITIVE CHINESE HAND CANNON
Length of barrel, 25½ in.; bore, about 1½ in.; diameter of muzzle, 2⅛ in.; diameter of breech, 2⅜ in.

FIG. 2. VERY EARLY FORM OF MATCHLOCK
Supposed to be of the fifteenth century; length of barrel, 47½ in.; bore, about ¾ in.; diameter of muzzle, 1 in.; diameter of breech, 1¼ in. octagon; entire length, 61 in.; weight, about 11 lb.

Beginning with this arm we find the vent placed on the right side and a pan added to hold the prime. A cover was also added, which was moved by hand. This gun is known to have been made as early as 1453 and possibly a little before that. It was fired by means of a match held in the hand.

The first lock seems to have been an S-shaped piece of metal, pivoted at the center, with the upper end slotted for the purpose of holding the match. The lower part was made large, like the lever of a crossbow, and so placed that the weight would keep the match raised above the pan of priming until the lower end, or "trigger," was pulled back, which action brought the match in contact with the priming and fired the piece.

Following this device came the more important form of matchlock, in which a spring was used in the lock, and it was also the first type to have a projecting open powder pan. This contrivance was improved soon afterward by the addition of a cover. Owing to their simplicity and cheapness these matchlocks were used for over two hundred years and in practically the same form until the introduction of the wheel-lock, which was invented in Nuremberg, Germany, somewhere between 1509 and 1517. Sparks for igniting the powder were obtained from a piece of sulphurous pyrites against which a steel wheel, having projections, was revolved. This wheel was rotated by means of a ribbon spring of the clock-spring type. The steel wheel had to be wound up each time and was released by pulling the trigger.

The so-called musket, according to Boutelle, was first used in Italy about 1530 and in France and England about 1570. It was a large and heavy "arquebus." At that time it was the custom to name guns after animals or birds, as for example the "falcon" and its diminutive, "falconette." As the musket was the most important small arm at that time, the name of the smallest bird of prey was given to it, which was that of the male young of the sparrow hawk, or the musket. Rifling of gun barrels, according to the same authority, was patented in England in 1635. Ancient bowmen had the idea when they arranged the feathers on the shafts of their arrows in a spiral so as to impart a rotary motion in flight. Rifling, however, was not popular in military muskets until after the introduction of breech-loaders, since the rifling was apt to foul and clog and make loading at the muzzle difficult at critical times. For this reason, smooth bores long were the standard weapon of the armies.

The snaphaunce gun, says Boulette, derived its name from the pecking hen, and by the same authority is said to have been invented by poachers, who were too poor to buy wheel-locks and who did not dare use matchlocks for fear the light would betray their movements. In these guns the wheel was replaced by a hammer, which struck a piece of pyrites placed above the priming pan. This gun was the immediate forerunner of the flintlock and, according to Boutelle, was invented about 1508. The flintlock proper is said by Norton to have been invented about 1630 and appears to have been first made in France.

Since most of the guns used round lead balls, the bore, or gage, of the gun early became known by the size of hole which it was necessary to use for a certain size or weight of ball. The balls were classified by the num-

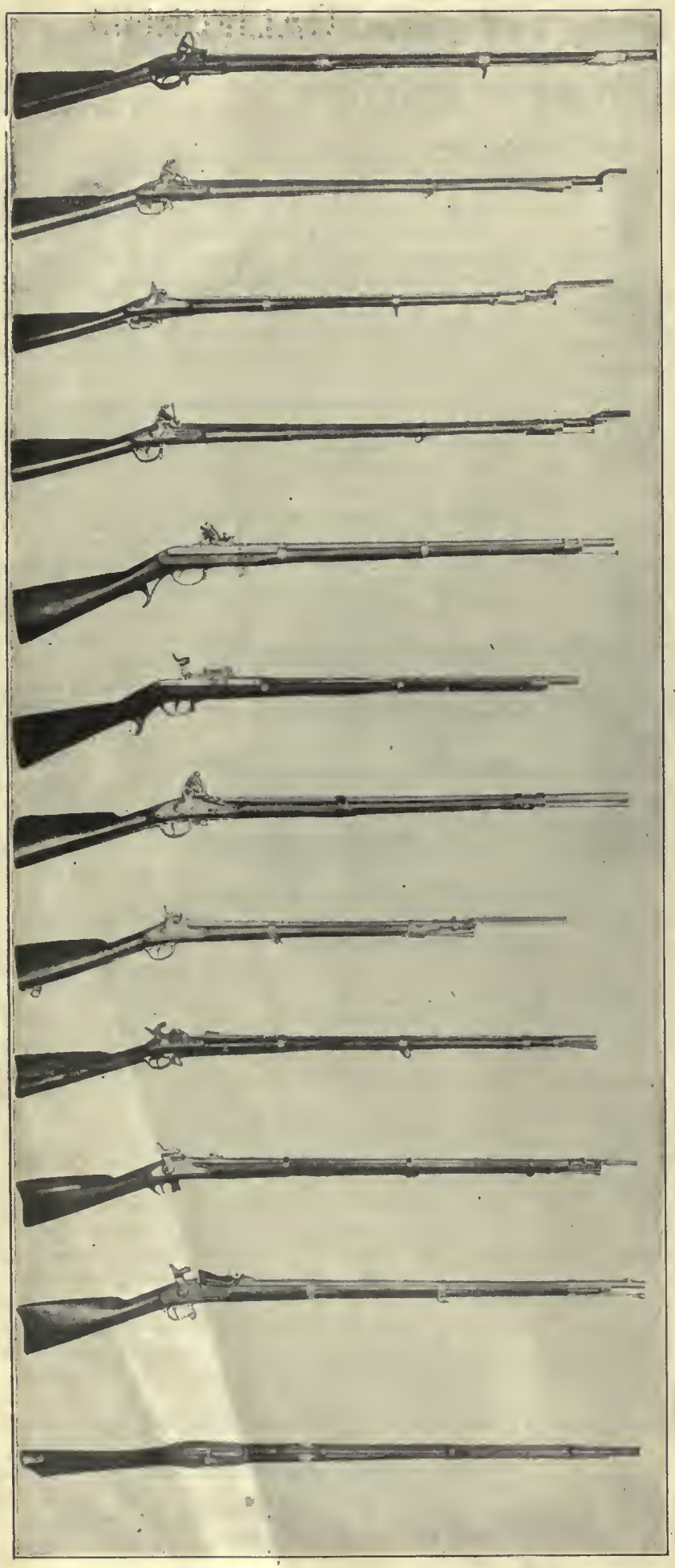

FIG. 3. UNITED STATES MUSKET, 1803
Flintlock; closely resembles French Charleville musket of 1763; made practically as in 1795 and following years at Springfield, Mass.; 71 cal.; diameter of breech, 2 3/16 in.; diameter of muzzle, 7/8 in.; length of barrel, 42 in. (barrel of 1809 musket was 45 in. long); entire length, 56½ in.; weight complete, 10 lb. 7 oz.; without bayonet, 9 lb. 11 oz.; made at Springfield

FIG. 4. UNITED STATES MUSKET, 1805
Flintlock; slight lock changes

FIG. 5. UNITED STATES MUSKET, 1821
Flintlock; altered later to percussion cap

FIG. 6. UNITED STATES MUSKET, 1825
Flintlock; blued barrel and darkened fittings; 69 cal.

FIG. 7. HALL BREECH-LOADER, 1831
Flintlock; paper cartridge; 54 cal.; diameter at breech, 1⅛ in.; diameter at muzzle, ¾ in.; length of barrel, 32½ in.; entire length, 52 in.; weight, 10 lb. 14 oz.; breech-block hinges at back and lifts up at front end; made at Harper's Ferry, Va.

FIG. 8. HALL BREECH-LOADER, 1839
Percussion lock; shown with breech-block raised for insertion of paper cartridge; otherwise same as Fig. 7

FIG. 9. UNITED STATES MUSKET, 1832
Flintlock; all brown; heavier powder pan; cal. 69

FIG. 10. ARTILLERY MUSKETOON, 1842
Percussion cap; new nipple seat; regular was practically the same, but had longer barrel; patterned after Charleville model of 1840; cal. 69

FIG. 11. SPRINGFIELD RIFLED MUSKET, 1855
Maynard primer; cal. 58; patch box in butt; rear sight; bulged nipple seat

FIG. 12. SPRINGFIELD RIFLED MUSKET, 1863
Percussion cap; cal. 58

FIG. 13. SPRINGFIELD BREECH-LOADING RIFLE, 1865
Allen alteration; breech-block hinge attached to top of barrel by short block and screws; has firing pin; used center-fire metallic cartridges; 58 cal.; diameter at breech-block, 1⅛ in.; diameter at muzzle, ¾ in.; from muzzle to hinge of breech-block, 37 in.; from muzzle to stock, 40 in.; entire length, 56 in.; weight, 10 lb.

FIG. 14. SPRINGFIELD BREECH-LOADING RIFLE, 1865
Top of barrel cut away to show insertion of tube for reducing caliber from 58 to 50; small piece of paper has been slipped between barrel and lining tube to show better how tube was placed; this changed the gun to an 1866 model

FIG. 15. SPRINGFIELD BREECH-LOADING RIFLE, 1866

Regular model; longer hinge-block screwed to top of barrel, as old one tended to work loose; brown barrel

FIG. 16. SPRINGFIELD BREECH-LOADING RIFLE, 1870

Barrel screwed into receiver frame; different rear sight; shown with breech-block up; cal. 50; length of barrel, 36 in.; entire length, 52 in.

FIG. 17. REMINGTON MODEL BREECH-LOADER, 1870

Thumb-block action; patented May 3, 1864; 50 cal.; length of barrel, 36 in.; entire length, 52 in.

FIG. 18. WARD-BURTON MODEL BREECH-LOADER, 1871

Bolt action; patented Dec. 20, 1859; cal. 45; diameter at breech-block, 1⅛ in.; diameter at muzzle, ¾ in.; length of barrel, 38 in.; entire length, 52 in.; weight, 9 lb. 6 oz.

FIG. 19. CHAFFEE-REECE BREECH-LOADING RIFLE, 1884

Bolt action; cal. 45; diameter at breech, 1⅛ in.; diameter at muzzle, ¾ in.; length of barrel, 28 in.; entire length, 48½ in.; weight, 9 lb. 13 oz.

FIG. 20. SPRINGFIELD BREECH-LOADING RIFLE, 1888

Rod bayonet (this is the 1884 regular model plus the rod bayonet); different rear sight; cal. 45

FIG. 21. UNITED STATES MAGAZINE RIFLE, 1892

Bolt-action modified Krag-Jorgensen; six shots—five in magazine and one in barrel; 30 cal.; wood-top barrel cover makes it easier to handle

FIG. 22. UNITED STATES MAGAZINE RIFLE, 1902

Side magazine removed; cal. 30; first type of present arm; rod bayonet; length of barrel, 31 in.; entire length, 50 in.; weight, 9 lb. 10 oz.

FIG. 23. UNITED STATES MAGAZINE CARBINE, 1899

Krag system; Buffington sight; cal. 30; wood top extends to front sight

FIG. 24. UNITED STATES MAGAZINE RIFLE, 1903 EXPERIMENTAL

Cal. 30; sight slightly changed; rod bayonet

FIG. 25. UNITED STATES MAGAZINE RIFLE, 1903 MODEL

Latest type with Maxim silencer; six shots—five in magazine and one in barrel; used as either single or magazine gun; sword bayonet; cal. 30; diameter of muzzle, 0.619 in.; diameter at breech, 1.14 in; length of chamber and bore, 23.79 in.

FIG. 28. SPENCER CARBINE

Patented Mar. 6, 1860; lever-action vertical slide block; rim-fire cartridge; 52 cal.; length of barrel, 20½ in.; entire length, 39¼ in.; weight, 9 lb. 5 oz.; 94,156 purchased 1861 to 1865

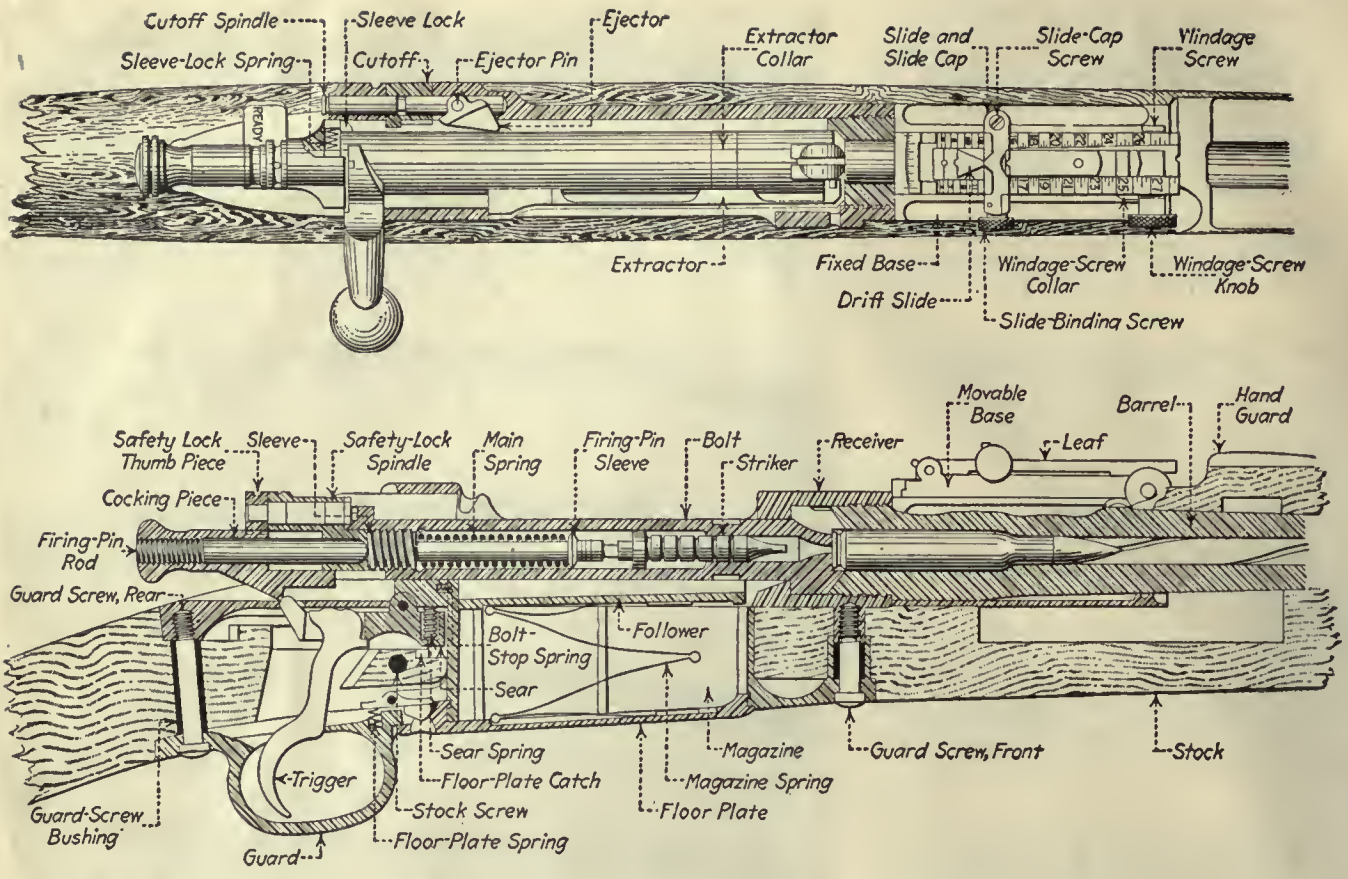

FIG. 26. SECTIONAL VIEW, BOLT AND MAGAZINE MECHANISM, U. S. MAGAZINE RIFLE, MODEL 1903

The bolt lever is shown projecting at the right in the top view. In operating the bolt, this lever is brought to a vertical position and pushed out or in. As the parts are shown, a cartridge is in place and the gun ready to fire, but the magazine is shown empty. Cartridges placed in the magazine are pushed upward to the feeding mechanism by means of the spring shown. The bolt moves backward and forward, as moved by the operator, and rotates in the well of the receiver. It carries a cartridge, either from the magazine or one placed by hand in front of it, into the chamber and supports its head when fired. The sleeve unites the parts of the bolt mechanism, and its rotation with the bolt is prevented by the lugs on its sides coming in contact with the receiver. The hook of the extractor engages in the groove of the cartridge case and retains the head of the latter in the countersink of the bolt until the case is ejected. The safety lock, when turned to the left, is inoperative. When turned to the right, which can only be done when the piece is cocked, the point of the spindle enters its notch in the bolt and locks the bolt; at the same time its cam forces the cocking piece slightly to the rear, out of contact with the sear, and locks the firing pin.

The bolt mechanism operates as follows: To open the bolt, raise the handle until it comes in contact with the left side of the receiver, and pull directly to the rear until the top locking lug strikes the cutoff.

Raising the handle rotates the bolt and separates the locking lugs from their locking shoulders in the receiver, with which they are brought in close contact by the powder pressure. This rotation causes the cocking cam of the bolt to force, the firing pin to the rear, drawing the point of the striker into the bolt, rotation of the firing pin being prevented by the lug on the cocking piece projecting through the slot in the sleeve into its groove in the receiver. As the sleeve remains longitudinally stationary with reference to the bolt, this rearward motion of the firing pin, and consequently of the striker, starts the compression of the mainspring, since the rear end of the latter bears against the front end of the barrel of the sleeve, and its front end against the rear end of the firing-pin sleeve. When the bolt strikes the receiver, the locking lugs have been disengaged; the firing pin has been forced to the rear until the sear notch of the cocking piece has passed the sear nose; the cocking piece has entered the cock notch in the rear end of the bolt; the sleeve lock has engaged its notch in the bolt; and the mainspring has been almost entirely compressed. During the rotation of the bolt a rear motion has been imparted to it by its extracting cam coming in contact with the extracting cam of the receiver, so that the cartridge will be started from the chamber. The bolt is then drawn directly to the rear, the parts being retained in position by the cocking-piece nose remaining in the cock notch remains longitudinally stationary with reference to the bolt.

To close the bolt, push the handle forward until the extracting cam on the bolt bears against the extracting cam on the receiver, thereby unlocking the sleeve from the bolt, and turn the handle down. As the handle is turned down, the cams of the locking lugs bear against the locking shoulders in the receiver, and the bolt is forced slightly forward into its closed position. As all movement of the firing pin is prevented by the sear nose engaging the sear notch of the cocking piece, this forward movement of the bolt completes the compression of the mainspring, seats the cartridge in the chamber and, in single loading, forces the hook of the extractor into the groove of the cartridge case. In loading from the magazine the hook of the extractor, rounded at its lower edge, engages in the groove of the top cartridge as it rises from the magazine under the action of the follower and magazine spring. This brings the parts to the position shown, and the piece is ready to fire.

After firing, just before the bolt is drawn fully to the rear, the top locking lug strikes the heel of the ejector, throwing its point suddenly to the right in the lug slot. As the bolt moves fully to the rear, the rear end of the cartridge case strikes against the ejector point and is ejected slightly upward and to the right from the receiver. Double loading from the magazine is prevented by the extractor engaging the cartridge case as soon as it rises from the magazine and holding its head against the face of the bolt until it is ejected.

It will be noticed that in this system of bolt mechanism the compression of the mainspring, the seating of the cartridge in the chamber and the starting of the empty case from the chamber are entirely done by the action of cams. The piece may be cocked either by raising the bolt handle until it strikes the left side of the receiver and then immediately turning it down, or by pulling the cocking piece directly back. In firing, unless the bolt handle is turned fully down, the cam on the cocking piece will strike the cocking cam on the bolt, and the energy of the mainspring will be expended in closing the bolt instead of on the primer. This prevents the possibility of a cartridge being fired until the bolt is fully closed.

The magazine may be charged either by cartridges held in a clip, or one at a time. To fill, the cutoff is turned up so as to show "on." The bolt is then drawn fully to the rear, the cartridges are inserted from the top, and the bolt is again closed. The magazine chamber is made wider than a single cartridge, but not as wide as two, so that the cartridges lie in it staggered, three on one side and two on the other, when the magazine is full.

When the cutoff is turned down, the magazine is "off" and the bolt cannot be drawn fully back. Its front end, projecting over the rear end of the upper cartridge, holds it down in the magazine below the action of the bolt. The magazine mechanism then remains inoperative, and the gun can be used as a single-loader, the cartridges in the magazine being held in reserve. The gun can also be readily used as a single-loader with the magazine empty.

When the cutoff is turned up, the magazine is "on," and the bolt can be drawn fully to the rear, permitting the top cartridge to rise high enough to be caught by the bolt in its forward movement. As the bolt is closed, this cartridge is pushed forward into the chamber, being held up during its passage by the pressure of those below. The last one in the magazine is held up by the follower, the rib of which directs it into the chamber. In magazine fire, after the last cartridge has been fired and the bolt drawn fully back, the follower rises and holds the bolt open to show that the magazine is empty.

ber required to make a pound. Consequently, if it took eight or twelve balls to make a pound, the corresponding size of gun would be known as eight or twelve ball. This naturally merged into bore, as the maker bored the barrels to the size of the ball used. Caliber, as now understood in the United States, is measured by the size of the bore in decimal parts of an inch, 30-caliber meaning 0.30 in.

While the very early and perhaps some of the first guns made were of the breech-loading type, considerable trouble was experienced in making the breech tight enough to prevent the escape of gas, which in many cases was extremely dangerous to the operator. It was for this reason that it was not until the invention of cartridges that breech-loading became practical. However, there are numerous specimens of other breech-loading mechanisms in existence in various museums. One example especially, which may be found in the British Museum, was made by John Cookson in 1586. This gun was not only a breech-loader, but was a repeater. Powder sufficient for ten loads was carried loose in one magazine and ten bullets in another. A revolving-disk mechanism fed a charge of powder and one bullet to the barrel, from which they were discharged. This gun appears to be in perfect condition in spite of the danger that is at once evident to the reader—of the ignition reaching the powder magazine itself.

An Early Repeating Breech-Loader

Another single breech-loader appears to have been made some 30 years previous to the Cookson gun, and in the same year of 1550 a matchlock revolver was invented, which had a seven-chambered cylinder revolved by the action of the hammer. Six of the seven chambers were exposed in practically the same way as in the modern revolver with which we are all familiar. Two weapons known to have been made during the reign of Henry VIII were veritable Snider action rifles.

In 1664 Abraham Hall invented a gun: "Which hath a hole at the upper end of the breech to receive the charge, which hole is opened or stopped by a piece of iron or steel that lies along the side of the barrel and that is moved by a ready and easy motion."

Numerous other examples of early breech-loading portable firearms could be cited, but the foregoing is sufficient to give an idea of some of the early inventions.

On May 21, 1811, John H. Hall, of North Yarmouth, Maine, patented a breech-loading gun that was the first one of the kind manufactured in this country, with the possible exception of a few isolated cases. It was at first a flintlock and later a percussion-cap gun, using paper cartridges. Official records show that about 100 were issued to a company of riflemen in 1816. In 1836, Congress voted Mr. Hall a reward of $10,000, based on $1 per gun, which shows that 10,000 had been made up to that time. These guns were priced at $20 each, and a number were used as late as the Civil War. There is no evidence of any foreign government having adopted a breech-loader previous to the invention of the Hall, so the United States must be credited with having been first in the field. It must not be understood, however, that this gun was ever officially adopted at any time for the entire United States Army. It was, however, used to a considerable extent in the Black Hawk and Seminole Wars, and also in the Mexican War; and while not generally known, quite a number were used in the Civil War.

Just how early paper cartridges were invented is uncertain, though in the year 1586 charges of powder and a bullet were placed together in a paper envelope or sack, the base of which was torn or bitten, and the powder poured into the barrel. The bullet was then rammed down on it. These cartridges were gradually improved in form, but did not carry their own means of ignition, being fired by matchlock, flintlock or percussion-lock mechanisms similar to those used for loose powder and ball. A cartridge carrying its own means of ignition is known to have been patented in 1827.

In the year 1836 Lefaucheux invented the pin-fire cartridge, which was made of thin brass and paper and had a pin projecting through the side which, on being struck, exploded a "cap" inside the shell. In this same year Greener, an Englishman, produced a very successful elongated bullet that would expand and fill the rifling grooves when fired, thus conserving the energy of the gas. Several others had tried the same scheme, but his appears to have been the earliest successful one.

The needle gun cartridge was invented by Deyse in 1838 and adopted by the Prussians in 1841. It had a conical bullet, with a wad at the base, behind which was a charge of powder in a lubricated paper case. The detonator was placed in the wad and was fired by means of a needle that was thrust through a perforation in the base, through the powder and into the "cap."

Percussion itself dates back to 1807 and is credited to the Rev. John Forsyth. It was first used in the form of powder ignited by means of a punch—hence the name of "punch-lock." Later, ignition was used in the shape of pills and gave the name of pill-lock to the type of arms to which it was applied. The copper percussion cap was invented in 1818 and is generally credited to Joseph Egg, of England.

In America the first metal cartridges appear to have been fired from percussion locks by means of a perforation in the base of the cartridge, which allowed the flame of the priming to ignite the charge. Probably the rim-fire cartridge closely followed. A center-fire cartridge was patented by Smith & Wesson in 1854. They also obtained patents on an improved rim-fire cartridge in 1860. It was the development of the metal cartridges that made possible the successful use of breech-loaders, as the expansion of the metal shell by the explosion for the first time produced an effectual seal for the prevention of the escape of gas at the breech.

Origin of the American Army Musket

The original model for the first musket made by the United States Government was the French model of 1763, which was largely furnished by the French Government during the American Revolution. This style was known as the Charleville musket, and it was copied in almost exact detail. The subsequent models brought out by the French were also closely followed for many years. The model of 1763 is especially noted as having been mentioned in the contracts of 1798. A model of 1797 was sent over from France by the American ambassador as an example of fine workmanship, and on the recommendation of Eli Whitney the improvements were later adopted in the United States guns. From the beginning of Government gun manufacture in the United States until the Krag system was adopted in 1892 the lines of the old Charleville musket are plainly visible. A few interpola-

tions were introduced to a limited extent, notably the Remington in 1870, the bolt-action Ward-Burton in 1871 and the Chaffee-Reece bolt-action in 1884. None of these were ever universally adopted for the regular army, though the Remington was issued in large numbers to militia in a number of the states.

The beginning of the manufacture of the Charleville pattern guns is pretty clearly traced. Soon after the Declaration of Independence steps were taken looking toward the establishment of an ammunition factory, but it was not until after the close of the Revolution that anything which could be called a Government small arm was manufactured. In 1776 General Washington ordered Col. David Manson, of Boston, to establish a laboratory for making all kinds of ammunition. Brookfield, Mass., and then Hartford, Conn., were suggested, but for sev-

FIG. 29. SHARP'S CARBINE
Patented Sept. 12, 1848, and Oct. 5, 1852; lever-action vertical sliding block; first ones used percussion caps and paper cartridges; cal. 50 and 52; length of barrel, 22 in.; total length, 39 in.; weight, 8 lb.; 80,512 purchased during Civil War

FIG. 30. MAYNARD CARBINE
Patented May 27, 1851, and Dec. 6, 1859; tip-up barrel; lever action; percussion cap; 50 cal.; length of barrel, 20 in.; total length, 36¾ in.; weight, 6 lb.; 20,002 purchased during Civil War

FIG. 31. BURNSIDE CARBINE
Patented May 25, 1856; percussion cap; flaring metal cartridge with small hole in butt end; lever-action tilting breech-block into which cartridges were placed butt end first; cal. 53.5; weight, 7 lb.; 55,567 purchased

FIG. 32. COLT REVOLVER REPEATER
5-shot; percussion caps; patented Nov. 24, 1857; cal. 56; length of barrel, 26 in.; total length, 44 in.; weight, 9 lb. 3 oz.

FIG. 33. CARBINE MADE BY B. KITTRIDGE & CO., CINCINNATI, OHIO
Rim-fire cartridges; 40 cal.; dated Oct. 25, 1859; tip-up barrel striker on hammer

FIG. 34. SMITH CARBINE
Patented June 23, 1857; percussion; top lever, tip-up barrel action; cal. 50; barrel, 21½ in.; total length, 39 in.; weight, 7 lb. 15 oz.; 30,062 purchased during Civil War

FIG. 35. JOSLYN CARBINE
Patented Oct. 8, 1861; rim-fire cartridge; firing pin; breech-block hinged at side; 53 cal.; weight, 7 lb. 3 oz.; 11,261 purchased

FIG. 36. REMINGTON CARBINE
Patented Dec. 28, 1863; thumb hinged block at breech; 44 cal.; weight, 5 lb. 4 oz.; 20,000 purchased

FIG. 37. GALLAGHER CARBINE
Patented July 17, 1860; percussion cap; tip-up barrel; 51 cal.; 22-in. barrel; weight, 7 lb. 8 oz.; 22,728 bought

FIG. 38. STARR CARBINE
Patented Sept. 14, 1858; firing pin; lever-action vertical sliding breech-block; 52 cal.; weight, 7 lb. 9 oz.; 25,603 bought

eral reasons were not selected. The final decision was centered on Springfield, Mass., and early records show that work was begun on this laboratory in April, 1778. After the Revolutionary War was over, all the employees were discharged and the buildings left in charge of a storekeeper.

In April, 1794, Congress authorized the establishment of two armories, one at Harper's Ferry, Va., and the other at Springfield, Mass. The manufacture of small arms began at Springfield in 1795 with 40 men, and 245 muskets were turned out the first year. There is no record of any small arms being produced at Harper's Ferry previous to 1801. In 1810 the output at Springfield was 9,700 muskets and 602 carbines. At this arsenal in 1819 the cost of labor per musket was $6.57, which together with the cost of the material brought the total cost to $12.40 each. The output of this arsenal continued from

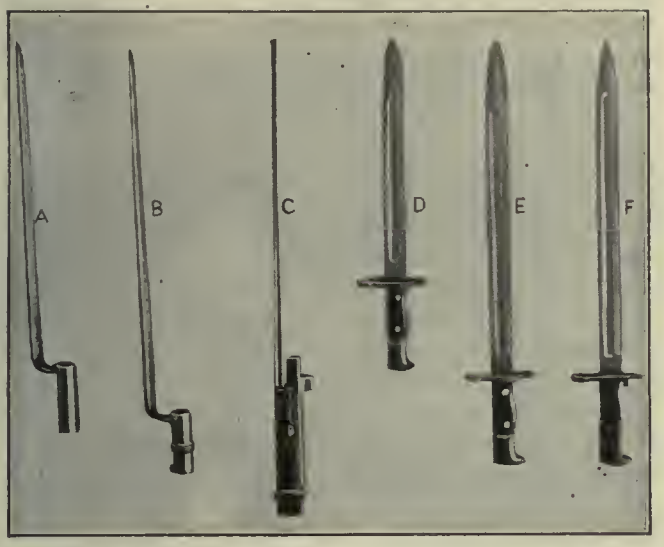

FIG. 27. TYPES OF BAYONETS ON UNITED STATES ARMY MUSKETS AND RIFLES

A, bayonet 1803, hollow ground point, 16 in. long, ⅞ in. at widest part of blade; B, bayonet 1865, hollow ground blade, 18 in. long, ¾ in. wide at widest part of blade, ⅜ in. thick at base of blade; C, rod bayonet 1888, when out projects 15 in. from end of barrel, rod is ⅝ in. in diameter with triangular point; D, Krag bayonet 1892; 11¾ in. long, ¼ in. thick at base; E, bayonet 1905, 16 in. long, 1x¼ in. at base of blade, handle 4⅝ in. long; F, bayonet 1906, slight changes in handle and catch

1811 to average about 1,000 per month. Twelve thousand muskets and 250 rifles were produced in 1819. This average was not materially changed until 1862, when it jumped to 102,410, and to 276,200 in 1864. The cost per gun the latter year was $10.69. In 1865 the output dropped to 195,341, and the cost rose to $14.12 each.

Besides the Government armories established, Congress in 1808 enacted a law for the annual payment from the United States Treasury of $200,000 for six private armories established that year. From among the more prominent gun makers were selected Asa Waters, Sutton (now Millbury), Mass.; Simeon North, Middletown, Conn.; Nathan Starr, Middletown, Conn.; Eli Whitney, Whitneyville (near New Haven), Conn.; Henry Derringer, Philadelphia, Penn.; and Lemuel Pomeroy, Pittsfield, Mass. Contracts were issued to these firms for a term of years, which were renewed from time to time until 1840. These private armories were regarded as permanent, having been recognized by the Government as a part of the United States industrial preparedness measures for the insurance of a supply of arms.

The six private armories assured, the Government proceeded to issue contracts for arms to supply the militia. From June 30 to Nov. 13, 1808, nineteen contracts were made; the total number of arms delivered by these nineteen firms to December, 1812, was 53,660.

In 1841 and 1842 the number of private armories was seven, with an output as follows: Pomeroy, 1,200 muskets; Whitney, 1,500 muskets; Starr, 1,200 rifles, Derringer, 1,200 rifles; Waters, 3,000 pistols; Johnston, 3,000 pistols; North, 2,000 Hall's carbines. These made a total of 13,100 annually. In 1845 the last of these contracts expired, and the whole system was broken up without notice.

Starting at the beginning, the strictly Government muskets and rifles were made as follows. The changes indicated can be easily traced by reference to the various illustrations, shown and described separately:

French Charleville musket, model 1763; pattern only.

Flintlock musket, smooth bore, 1795 to 1822; minor changes: bore reduced from 71 or more to 69 cal.

Musket altered to percussion, model 1822; cal. 69.

Musket, percussion; new nipple seat or boss; model 1842; cal. 69; patterned after French Charleville, model 1840.

Springfield rifled musket, model 1855; Maynard primer; cal. 58.

Springfield rifled musket, models 1861, 1863, 1864; different mountings.

Springfield breech-loading rifle; model 1865; Allen alteration; cal. 58.

Springfield breech-loading rifle, model 1866; cal. 50.

Springfield breech-loading rifle, models 1868 and 1870; cal. 50.

Springfield breech-loading rifle, model 1873; cal. 45.

Springfield breech-loading rifle, model 1884; cal. 45; rod bayonet.

United States magazine rifle, model 1892; cal. 30; Krag-Jorgensen system.

United States magazine rifle, models 1896 and 1898; Krag system.

United States magazine rifle, model 1903; cal. 30.

Briefly reviewing the various changes and interpolations that took place from time to time, only minor alterations were made in the muskets manufactured from 1795 until 1822, when the percussion system was adopted to supersede the flintlocks. Many flintlocks were altered later, so that frequently models of earlier years are encountered in museums, having the percussion system of ignition. A large number of the old flintlocks were allowed to accumulate at the various arsenals until in 1850 and 1851 a great many were changed to percussion. It was during this period that the Hall breech-loader was used to some extent, and many are to be found of both systems.

The model of 1842 shows a new nipple seat or boss, bulging out from the side of the barrel and an integral part of it. The next change of importance was the reduction of the bore from 69 to 58 caliber and the adoption of the Maynard primer, which was done in 1855. The Maynard primer consisted of a flat tape with an explosive mixture, or caps, at intervals. This tape was wound over a small drum, and the caps were fed one at a time up over the nipple. The action of the hammer, as it was cocked, brought a cap into position; and as it descended, it cut off a piece of the tape and a cap. This did away with the necessity of putting a cap on the nipple at each loading, as it was taken care of automatically as long as the priming tape lasted, when it was easily replaced. This system was later abandoned and return was made to the percussion caps. With this exception, few changes other than in the mountings were made for years, the essential parts remaining standard

Very few breech-loading arms except the Hall were tried by the Government previous to the Civil War. Among the principal ones were the Sharps, Burnside and Spencer, of which a few were issued to troops between 1845 and 1860. Some Maynards were also issued. The general opinion of the army boards of this time was that the breech-loader was not perfected enough for general adoption. At the outbreak of the Civil War the Government found itself unable to furnish its troops with arms, so they were purchased both here and abroad. None of these weapons, however, seem to have influenced the subsequent Government models to any noticeable extent. Since these guns had so little bearing on the regular army models and were so numerous, only a few of the better known ones are shown in the illustrations.

In 1865 the Government adopted its first official breech-loader. This was known as the Allen alteration and consisted mainly in crossmilling a section out of the top of the rear end of the barrel and fitting on a hinged breech-block. This block is plainly shown in the illustration for that year. The model of 1866 was very similar, but the caliber was reduced to 50, which was taken care of in the guns already made by inserting a rifled tube in the barrel to reduce it to the required size. Practically no change was made in the models of 1868 and 1870, except that in 1870 the barrel was made to screw into the receiver frame. It was also in this year that the Remington breech-loader was used to a limited extent. This was followed the next year by another brief experiment in the form of the Ward-Burton bolt-action rifle, which was one of the earliest of this type.

The model of 1873 had the caliber reduced to 45. Some of the officers' models of this year also were fitted with a three-cornered rod bayonet. Of course, it must be borne in mind that all through these periods numerous carbines for mounted troops, artillery, officers or others were made, but had no bearing on the main issue. All sorts of weapons were also being constantly tried out by the ordnance boards in the search for something better, but through it all the old lines of the original Charleville musket proved the more practical.

The Springfield model of 1884 carried the rod bayonet as its principal change. This was a round pointed rod that was carried in the rifle about like the old ramrod and could be pulled out a certain distance, when a catch would hold it until released and pushed back again. This year also saw the introduction of another experiment in the Chaffee-Reece bolt-action rifle, of which only a few hundred were manufactured and issued for regular service.

The next change is a radical one, the caliber being reduced to 30 and a magazine rifle of the modified Krag-Jorgensen type being adopted after extensive competitive tests. It is not necessary to describe this model in detail, though it continued in use with slight alterations until the adoption of the present model of 1903, the action and details of the latest type of which are described elsewhere. This last rifle contains many of the best features of both the Krag and the Mauser systems, and in its present form is considered by army men to be one of the best and hardest shooting rifles used by any army. The big advantage of the bolt action is that it lends itself so easily to either magazine or hand loading.

During the entire period of rifle evolution the bayonets varied but little, except as they were made to conform to the different sizes of barrels. Some special designs were introduced for different branches of the service, but three principal types only were used by the regular army, as shown by the illustrations.

General Specifications and Barrel Operations

By Fred H. Colvin

This article begins a complete description of the manufacture of the Springfield rifle, showing each operation on each component part and illustrating the machines, tools, jigs, fixtures and production methods.

These methods and tools represent the present government arsenal practice and enough details and data are given to enable any good designer or toolmaker to produce working jigs and fixtures for the parts designated or for similar ones if it is desired to work along these lines.

The Springfield rifle, known as the model of 1903, has a bore of 0.30 in. and uses a ball cartridge weighing 395.5 grains. The bullet weighs 150 grains, and the weight of the powder charge is about 50 grains. This gives an initial velocity of 2,700 ft. per sec. The total length of the barrel proper is 24.006 in., the bullet traveling 21.697 in. in the barrel. There are four right-hand rifling grooves with a uniform twist of one turn in 10 in. The width of the grooves is 0.1767 in., three times the width of the lands, which are 0.0589 in. The rifle groove is 0.004 in. deep. The total length of the gun is 43.212 in. without the bayonet, and its total weight, also without bayonet, is 8.69 lb. The weights of the various parts are given in Table 1.

There are 93 component parts in this rifle. These are illustrated on the board in Fig. 1. The names are listed under Fig. 2, which shows the important parts by number. Thus the action of the rifle is evident, all details being made clear by a reference to the various parts.

Before taking up the manufacture of the rifle, it seems best to show exactly the kind of material selected for the various parts. The steel used is divided into seven classes—A, B, C, D, E, also music wire and screw stock of commercial grade. The two latter require no physical tests. Classes A, B and C are simply carbon steel to be made by the openhearth or crucible process. Classes D and E are also carbon steel and may be produced by either the openhearth or the Bessemer process. The physical requirements and the chemical composition are given in full detail in Tables 2 and 3.

FIG. 1. SAMPLE BOARD, SHOWING VARIOUS PARTS OF SPRINGFIELD MODEL 1903 SERVICE RIFLE

The requirements for materials which are to be used for rifle parts are such as to insure dependability without calling for the fulfillment of impossible conditions. The necessity for machinability tests and the rejection of material which does not meet such requirements even if physical and chemical analyses are met, is apparent.

Steel of all classes must machine freely for its grade in the ordinary operations of manufacture. This is determined by taking samples from each lot and putting them through the different manufacturing processes. In order to be accepted the stock must be worked with the regular tools and at the piecework price in force. The allowance for rejection for various classes is as follows:

ALLOWANCES FOR SEAMS OR OTHER DEFECTS

Class A Class B	½ of 1 per cent. of the number of pieces machined in the working test
Class C Class D Class E	1 per cent. of the number of pieces machined in the working test

The chemical composition contained in Table 3 is based upon the analyses of steels that have been found satisfactory in both the physical and working tests and is for information only. The contractor may vary the proportion of carbon, manganese and silicon, but the maximum limits given for manganese, sulphur and phosphorus must not be exceeded, and Class C steel must not contain more than 0.35 carbon. No nickel or other alloys shall be used in any of the grades.

Steel of all classes must be free from checks, heavy scale and hard spots. All steel will be delivered unannealed, in lengths not exceeding 12 ft. and without any heat-treatment, unless otherwise specified. The sizes and classes of steel used for various parts are shown in Table 3-A.

Instructions for Annealing Components

In general, all forgings of the components of the arms manufactured at this armory and all forgings for other ordnance establishments will be packed in charcoal, lime or suitable material and anncaled before being transferred from the forge shop.

Except in special cases, all annealing will be done in annealing pots of appropriate size. One fire end will be inserted in the center of the annealing pot nearest the middle of the furnace and one in the furnace outside of but near the annealing pots.

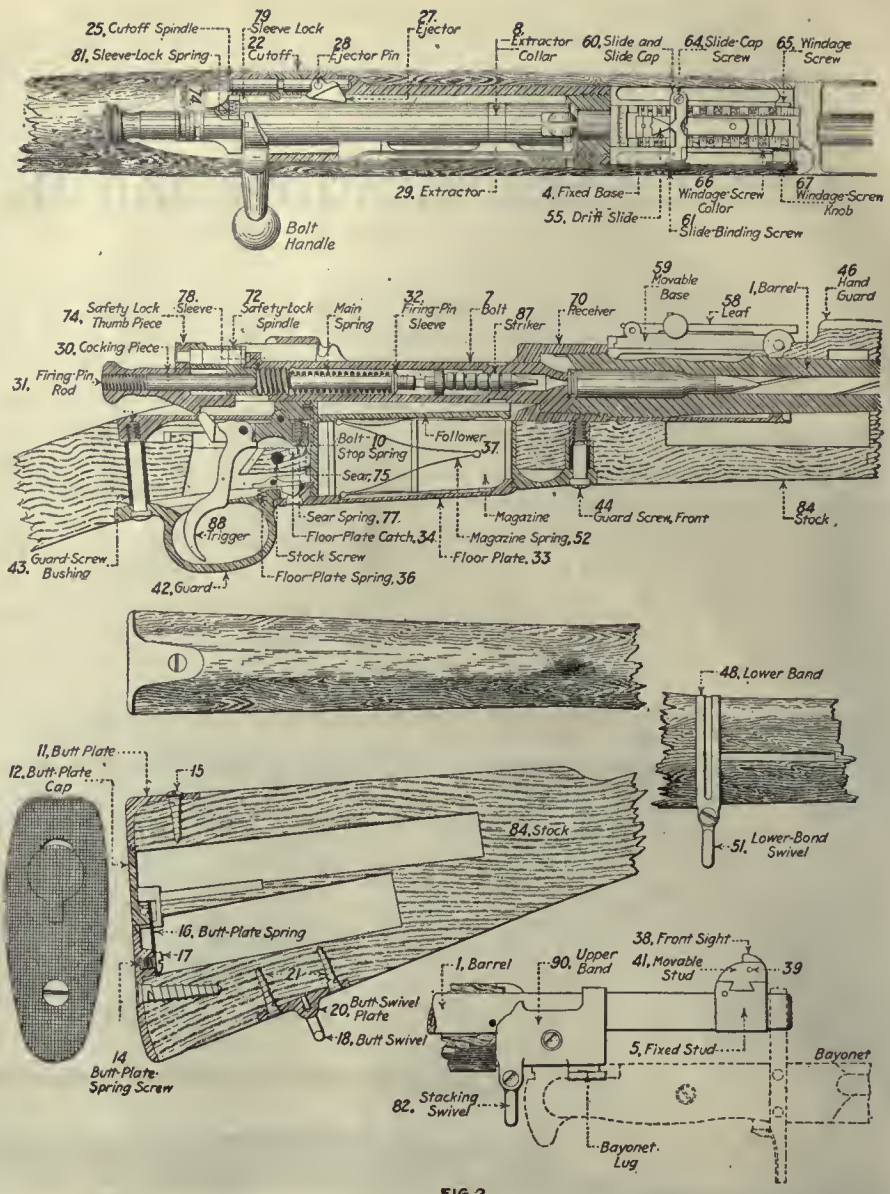

FIG. 2. SECTIONS OF SPRINGFIELD MODEL 1903 SERVICE RIFLE WITH PARTS NUMBERED FOR IDENTIFICATION

UNITED STATES RIFLE

Caliber 0.30—Model of 1903

Barrel:
1 Barrel
2 Base pin
3 Base spline
4 Fixed base
5 Fixed stud
6 Stud pin

Bolt:
7 Bolt
8 Extractor collar

Bolt Stop:
9 Bolt-stop pin
10 Bolt-stop spring

Butt Plate:
11 Butt plate
12 Butt-plate cap
13 Butt-plate pin
14 Butt-plate screw, large
15 Butt-plate screw, small
16 Butt-plate spring
17 Butt-plate spring screw

Butt Swivel:
18 Butt swivel
19 Butt-swivel pin
20 Butt-swivel plate
21 Butt-swivel screws (2)

Cutoff:
22 Cutoff
23 Cutoff plunger
24 Cutoff screw
25 Cutoff spindle
26 Cutoff spring
27 Ejector
28 Ejector pin
29 Extractor

Firing Pin:
30 Cocking piece
31 Firing-pin rod
32 Firing-pin sleeve
33 Floor plate
34 Floor-plate catch
35 Floor-plate pin
36 Floor-plate spring
37 Follower

Front Sight:
38 Front sight
39 Front-sight pin
40 Front-sight screw
41 Movable stud
42 Guard
43 Guard-screw bushing
44 Guard screw, front
45 Guard screw, rear
46 Hand guard
47 Hand-guard clips (2)
48 Lower band
49 Lower-band screw
50 Lower-band spring
51 Lower-band swivel
52 Magazine spring
53 Mainspring

Rear Sight:
54 Base spring
55 Drift slide, 0.05 peep
56 Drift-slide pin
57 Joint pin
58 Leaf
59 Movable base
60 Slide

Rear Sight (Continued):
61 Slide binding screw
62 Slide cap
63 Slide-cap pin
64 Slide-cap screw
65 Windage screw
66 Windage-screw collar
67 Windage-screw knob
68 Windage-screw pin
69 Windage-screw spring
70 Receiver

Safety Lock:
71 Safety-lock plunger
72 Safety-lock spindle
73 Safety-lock spring
74 Safety-lock thumb piece
75 Sear
76 Sear pin
77 Sear spring

Sleeve:
78 Sleeve
79 Sleeve lock
80 Sleeve-lock pin
81 Sleeve-lock spring
82 Stacking swivel
83 Stacking-swivel screw
84 Stock
85 Stock screw
86 Stock-screw nut
87 Striker
88 Trigger
89 Trigger pin
90 Upper band
91 Upper-band screw

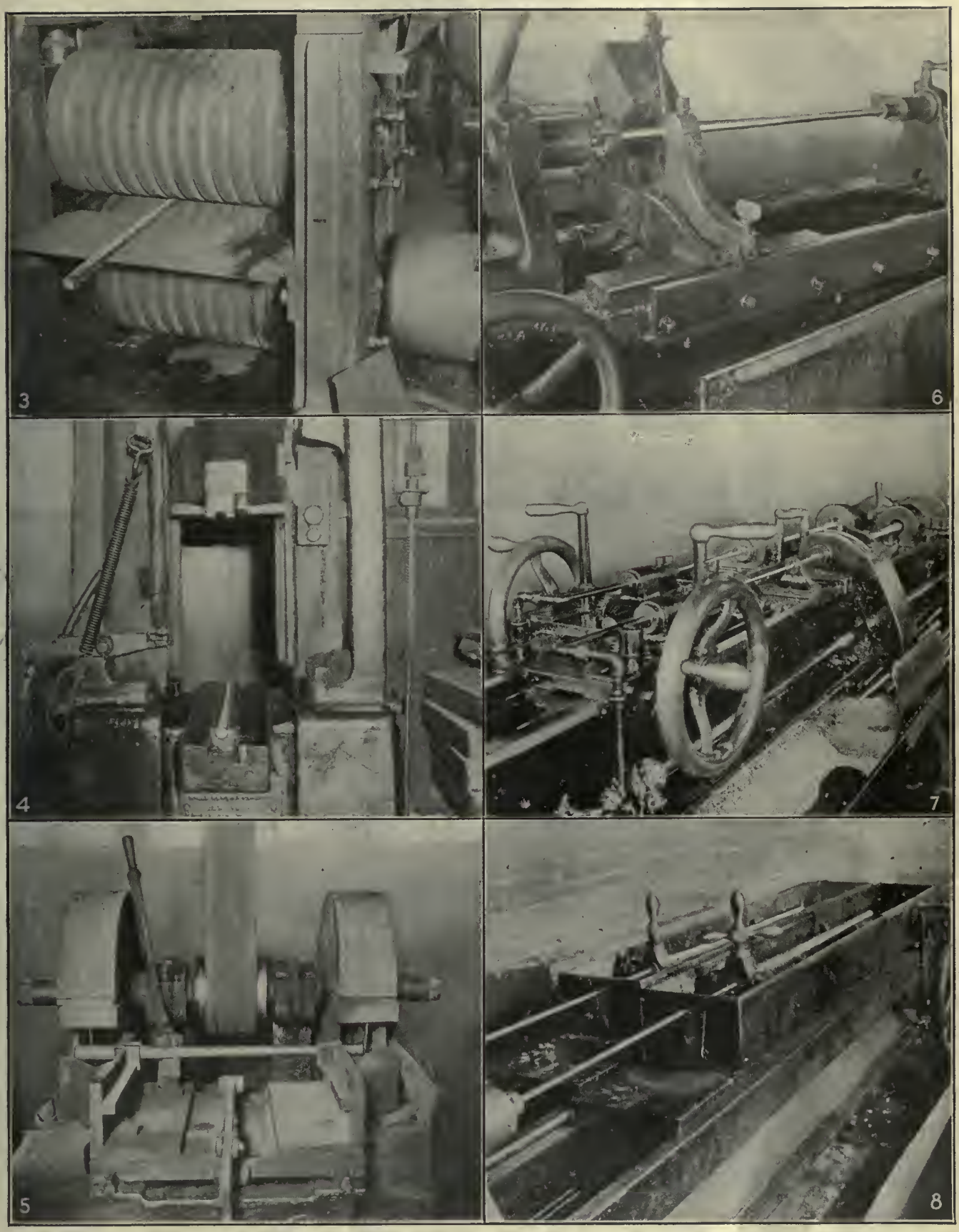

FIGS. 3 TO 8. SPECIALIZED OPERATIONS ARE FREQUENT IN MAKING THE SPRINGFIELD 1903 RIFLE BARREL

Fig 3—Rolling barrels. Fig. 4—Hammer for straightening barrels. Fig. 5—Sawing barrels to rough length. Fig. 6—Turning outside of barrels. Fig. 7—Drilling holes in barrels Fig. 8—Reaming holes in barrels

The Leeds & Northrup 8-point recording pyrometer will, in general, be used in keeping the record of the annealing temperatures. The following temperatures

These instructions have since been amended to authorize the annealing of components of Class D and Class E stock in a muffler furnace without the use of annealing

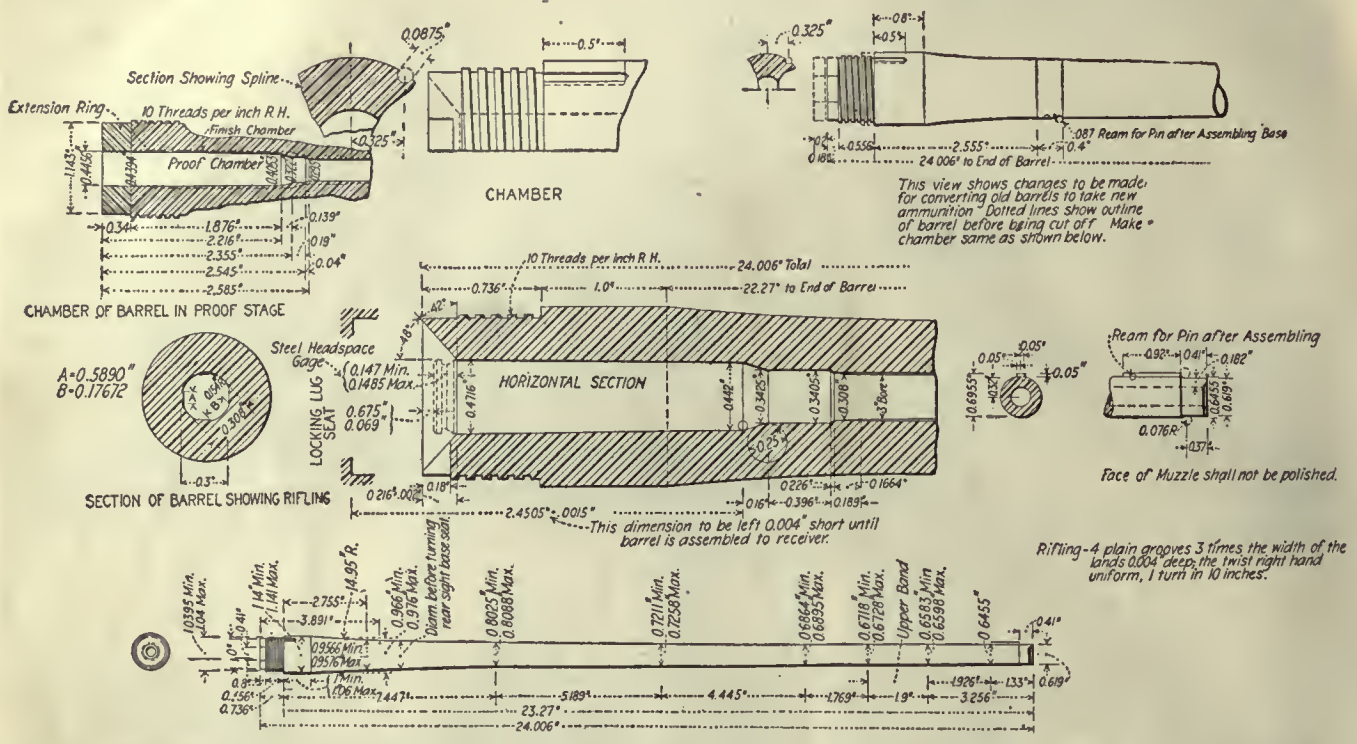

FIG. 9. SECTIONS OF SPRINGFIELD MODEL 1903 RIFLE BARREL, SHOWING WORKING LIMITS AND DIMENSIONS

will be used in annealing carbon-steel components of the various classes used at this armory:

Components of Steel	Deg. C.
Class A	800
Class B	800
Class C	820
Class D	850
Class E	880

The fuel will be shut off from the annealing furnace gradually as the temperature approaches the prescribed annealing temperature, so as to prevent heating beyond that point.

TABLE 1. FINISHED WEIGHTS OF PARTS OF THE SPRINGFIELD MODEL 1903 SERVICE RIFLE

	Lb.
Barrel	2.79
Barrel, with rear-sight base and front-sight stud	3.00
Butt plate	0.26
Receiver	0.98
Bolt mechanism	1.00
Magazine and trigger guard	0.44
Magazine mechanism, including floor plate	0.17
Bayonet	1.00
Stock	1.58
Hand guard	0.13
Front and rear hands, including swivels	0.25
Rear sight, not including base	0.20
Total weight of metal parts	7.30
Oiler and thong case	0.19
Total weight of arm, including oiler and thong case, with bayonet	9.69
Total weight of arm, including oiler and thong case, without bayonet	8.69
Weight to compress mainspring	16 to 18
Trigger pull (measured at middle point of bow of trigger)	3 to 4½

The forgings of the rifle barrel, it must be stated, are exceptions to the foregoing general rule. These forgings will be packed in lime and allowed to cool slowly from the residual heat after forging.

The classes of steel used in the forgings of the principal components manufactured in the forge shop at this armory as shown in Table 4, in which the grade of steel required is indicated after the name of the component, designation being by letter.

pots, when on account of lack of furnace capacity it is not practicable to anneal all components in pots. The annealing temperatures, however, remain the same in all cases.

TABLE 2. PHYSICAL REQUIREMENTS CALLED FOR IN VARIOUS GRADES OF STEEL

Class	Minimum Physical Qualities			
	Tensile Strength, Lb. per Sq.In.	Elastic Limit, Lb. per Sq.In.	Elongation, %	Contraction of Area, %
A	110,000	75,000	20	45
B	90,000	60,000	15	20
C	75,000	50,000	25	50
D	65,000	40,000	23	40
E	40,000	25,000	33	55

Physical Tests

Class A—Barrel steel: From each lot of Class A steel submitted at any time for test, there shall be taken a sample of not less than 300 lb. from each heat composing the lot submitted. When this sample is received, it will be cut up into barrel billets, heated to a temperature of not less than 725 deg. C. (1,337 deg. F.) and rolled into rifle-barrel blanks according to the prescribed methods in use. Immediately after rolling, the barrel blanks will be placed in dry, warm, slaked lime to cool. When cool, at least five barrel blanks will be selected at random and test specimens cut from the large end of the barrel blanks so selected. If these specimens pass the physical test, the remaining barrel blanks will be submitted to the working and high-pressure tests. When a lot of steel represented by an accepted sample as described above is received, one test specimen for each 4,000 lb. shall be selected and similarly tested, in order to determine whether the sample tested actually represents the lot received.

Classes B, C, D and E—Steel: From each heat of steel submitted at any one time for test, one test specimen for each 4,000 lb. of each size shall be selected; and in case of unannealed stock these specimens shall, before machining, be thoroughly annealed from a temperature of 10 to 20 deg. C. (50 to 68 deg. F.) above the lowest absorption point for the specimen tested. The absorption point and physical qualities shall be determined by the Ordnance Department. The specimens for physical test shall have a length of stem 2 in., and the diameter of the stem shall be 0.505 in. wherever the size of the stock permits. In all other cases the diameter of the stem shall be the maximum obtainable, except that for material having a cross-section of less than 0.05 sq.in. no physical test will be required. In testing a specimen as indicated above, if it fails in any of the requirements the contractor may submit three specimens to represent the steel being tested, all of which must fulfill requirements. All expenses involved in making the physical tests shall be borne by the contractor.

TABLE 3. CHEMICAL COMPOSITION

Class	Combined Carbon		Manganese		Silicon		Sulphur	Phosphorus
	Min.	Max.	Min.	Max.	Min.	Max.	Not more than	
A	0.50	0.60	1.00	1.29	0.15	0.25	0.06	0.08
B	0.95	1.10	0.25	0.40	0.15	0.20	0.022	0.019
C	0.30	0.35	....	1.30	0.05	0.10	0.06	0.06
D	0.10	0.30	....	0.50	0.02	0.15	0.12	0.15
E	0.04	0.08	....	0.50	....	0.05	0.12	0.15

In describing the making of the barrel and other important parts of the Springfield rifle all the prineipal operations will be shown in detail, minor operations being briefly deseribed. It will be noticed that the operation numbers, Table 5, do not follow in alphabetical or numerical order, owing to the fact that it has been found advisable to ehange the sequence of operations since these designations were established. It has been found best to rctain these symbols in order to avoid confusion both on the part of those who are now engaged in this work and those who may possibly take it up at some later date.

TABLE 3-A. SIZES OF STOCK FOR RIFLE COMPONENTS

Class A:
Barrel, 1.35 in. round in 12-ft. lengths

Class B:
For extractor, 0.33 in. square
For lower-band swivel, 0.47 in. round

Class C:
Bolt, 0.89x0.70 in. rectangular, length in multiples of 7⅛ in.
Receiver, 1⅛x1⅛ in. rectangular, length in multiples of 15 in.

Class D:
Sear, follower, stacking swivel, safety-lock thumb piece, movable stud and leaf, 0.47 in. round
Floor plate, 0.52 in. round
Rear-sight movable base, 0.60 in. round
Rear-sight fixed base, 1.4 in. round
Ejector, sleeve lock and slide cap, 0.26 in. square
Floor-plate catch and slide, 0.30 in. square
Extractor collar and butt swivel plate, 0.40 in. square
Cocking piece, 0.56 in. square
Sleeve and fixed stud, 0.80 in. square
Butt-plate cap, 0.48x0.28 in. rectangular
Trigger, 0.50x0.30 in. rectangular
Cutoff, 0.60x0.50 in. rectangular
Lower band, 0.68x0.38 in. rectangular
Butt plate, 0.88x0.48 in. rectangular
Guard, 1⅛x1 5/16 in. rectangular
Sight cover, 0.055 in. thick, 3½ in. wide by 48 in. long. This stock must be annealed, smooth, uniform in thickness and capable of being bent double, cold, without cracking

Class E:
Upper band, 1.4 in. round

Screw Stock:
This wire must be soft, bright, straight, free from kinks and capable of being easily worked in automatic machines. Wire to be shipped in boxes. No physical tests required.

For	Diameter, In.	Length, Ft.
Dropper	0.057 ±0.001	10
Screwdriver rivet, bright, soft rivet steel, capable of being headed twice its diameter, without splitting	0.190 +0.001	10
Cutoff spindle	0.229 −0.002	10
Ejector pin	0.245 −0.001	10
Bayonet-grip screw and safety-lock spindle	0.254 +0.001	10
Lower-band screw, stacking-swivel screw and upper-band screw	0.275 −0.001	10
Stock screw	0.325 +0.002	10
Guard-screw bushing, windage-screw collar and stock-screw nut	0.331 ±0.002	10
Butt-plate screw, large	0.46 ±0.001	10

For	Diameter, In.	Length, Ft.	In.
Firing-pin rod	0.290 −0.002	10	1
Striker	0.42 ±0.001	10	..

There are many details in connection with work of this kind which it is impossible to describe or illustrate so that the work can be exactly duplicated by inexperieneed men. We shall, however, as far as possible, point out the little kinks and devices which have been developed through long years of experience, in the belief that they will be found worthy of careful consideration.

One of the noticeable features of the work at the Springfield arsenal is the extremely smooth reaming of all essential holes. One instance of this is the use of what is known as a "scrape reamer," in which the teeth have no cutting rake, but as the name implies, serape the last thousandth of metal from the bore. The same is true of the rifling cutters, which have been found more satisfactory for shop use than those of the hook type.

The details of the rifle barrel are illustrated in Fig. 9. This makes it unneeessary to show the dimensions of the barrel gages. They will for the most part be presented in outline only, so as to indicate the form of gages used, the dimensions being obtainable from the barrel itself, Fig. 9. Some of the special gages will be shown in full detail in their proper place.

TABLE 4. CLASSES OF STEEL FOR FORGINGS

Component	Class	Component	Class
Bayonet			
Bayonet	B	Bayonet guard	D
Bayonet catch	D	Bayonet-scabbard catch	D
Rifle			
Barrel	A	Movable base	D
Base spring	B	Movable stud	D
Bolt	C	Receiver	C
Bolt stop spring	B	Safety-lock thumb piece	D
Butt-plate	D	Butt-swivel plate	D
Butt-plate cap	D	Cocking piece	D
Butt-plate cap spring	B	Cutoff	D
Fixed base	D	Drift slide	D
Fixed stud	D	Ejector	D
Floor plate	D	Extractor	B
Floor-plate catch	D	Extractor collar	D
Follower	D	Sear	D
Front sight	B	Sleeve	D
Front-sight cover	D	Sleeve lock	D
Guard	D	Slide	D
Leaf	D	Slide cap	D
Lower band	D	Stacking swivel	D
Lower-band spring	B	Trigger	D
Lower-band swivel	B	Upper band	E
Magazine spring	B	Hand-guard clips	B

Bearing in mind that the important part of the rifle barrel is the bore, the reason for straightcning and finish-turning the barrel after it has been bored and reamed will be apparent.

The working point of the barrel is the bore, and in connection with this are the two "spots" left on the outside for chucking in the skiving, operation 21.

TABLE 5. OPERATIONS ON RIFLE BARREL

Operation	
O	Cutting bars from stock
A	Heating
B	Rolling from billet
C	Catching
D	Straightening under hammer and sawing to length
E	Annealing
6	Milling to working length for turning
6-A	Stamping lot number to show maker
2	Centering on lathe ends
1	Straightening outside
8	Spotting muzzle, turning to working size
9	Turning outside rough
9-A	Stamping, repetition of 6-A, which has been removed by turning.
5	Drilling bore 0.293 in. in diameter
7	Reaming to 0.295 in. in diameter
19	Chambering to remove stock to working size
13	Straightening the bore when necessary
20	Turning spots for holding barrel for operation 21
21	Skiving with form cutter at both ends
11	Finish-turn outside
12	Filing outside to gage
11-A	Stamping
24	Milling muzzle to working length
32	Filing butt and tenon
33	Finishing butt-tenon-shoulder neck and reaming rear end of chamber for threading-machine center
34	Cutting thread for receiver and marking for draw
23	Milling front-sight spline
39½	Stamping shell and flame, S. A. and year on barrel
17	Reaming to 0.298 in. in diameter
26	Reaming to 0.300 in. in diameter
25	Straightening bore
27	Rifling bore
28	Burring thread and shoulder
35	Cutting chamber ramp
36	Chambering to finish
36-A	Burring chamber corner
37	Hand-milling extractor cut
37-A	Burring extractor cut
38	Rounding lips of muzzle to finish length and shape
38½	Hand-milling seat for fixed stud and front sight
39	Filing muzzle
40	Assembling rear-sight fixed base and front-sight fixed stud to barrel
41	Drilling and reaming front sight, fixed stud and barrel for securing pin
42	Drilling and reaming rear-sight fixed base and barrel for securing pin
43	Pinning front-sight fixed stud and rear-sight fixed base to barrel
44	Drilling rear-sight spline pin hole in base and barrel
45	Assembling and driving rear-sight fixed-base spline pin
46	Grinding and polishing ends of securing pin
47	Browning barrel

OPERATION O. CUTTING BLANKS FROM BAR

Transformation—Fig. 10. Machine Used—Hilles No. 2 stock shears, belt drive. Number of Operators per Machine—One. Number of Cuts—One. Coolant—None. Gages—Stop on machine. Production—250 billets per hr. Note—Size of stock, 1.35; crucible steel used; length of bars, 13¼ in.; work pushed to a stop.

OPERATION A. HEATING THE RIFLE BARRELS FOR ROLLING

Number of Operators—Two, one roiler and one catcher; these can be doubled for increased production. Description of Operation—Rolling general outline of barrel from billet 13¼ in. long to 25 or 25½ in.; the billets are preheated to about 550 deg. C. (1,025 deg. F.), then to 741 deg. C. (1,364 deg. F.). Apparatus and Equipment Used—Gilbert & Barker oil furnaces; use air at 13 to 15 lb. pressure; furnaces about

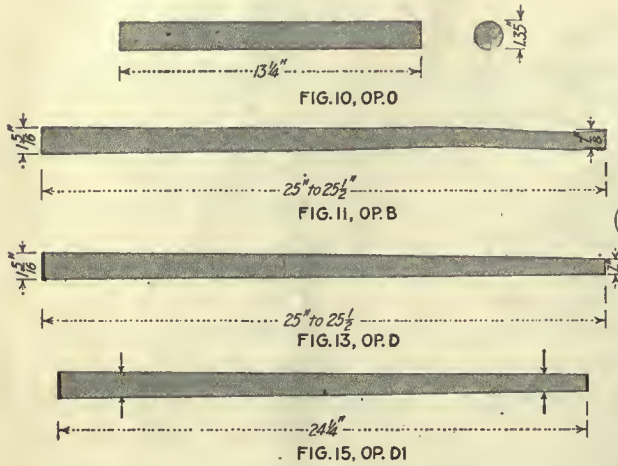

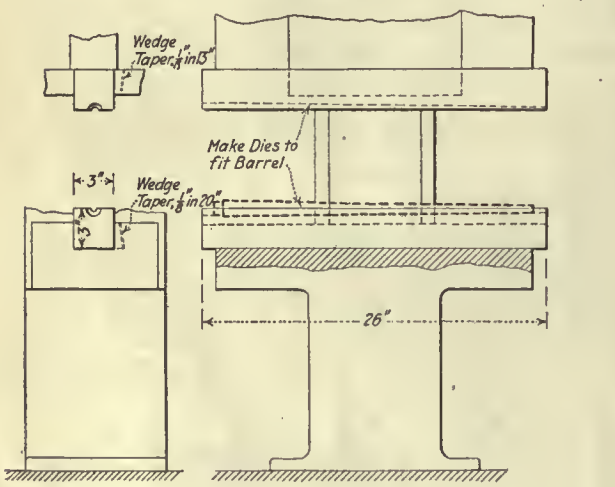

FIG. 14, OP. D

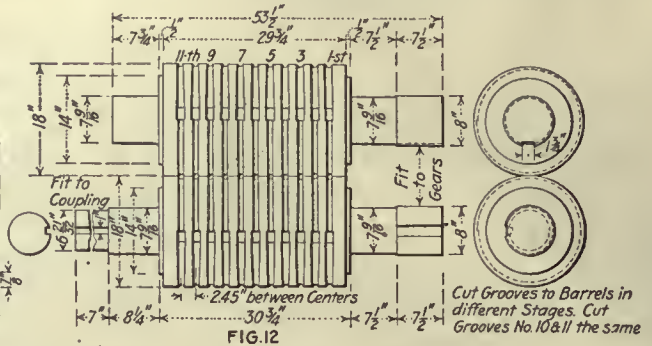

FIG. 12

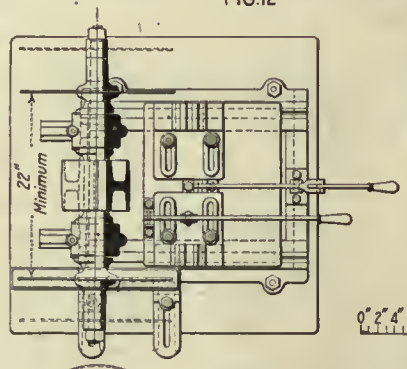

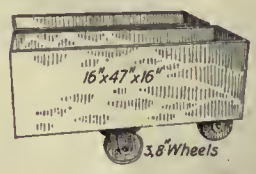

Annealing Trucks
FIG. 17
OP. E

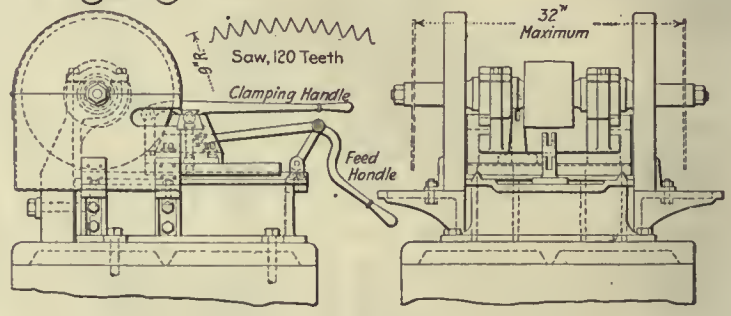

FIG. 16, OP. D1

3 ft. square. Gages—Leeds & Northrup pyrometer. Production—Present capacity, 40 per hr.; 300 per day with two men; four men, 600 per day.

OPERATIONS B AND C. ROLLING THE BARRELS

Transformation—Fig. 11. Number of Operators—Two or four men to a machine. Description of Operation—The first operator takes blanks from the second furnace and passes them between the rollers; the second operator catches bars and passes them back over the rolls to the first operator (this is operation C. Apparatus and Equipment Used—A machine, modified type of Farrel Foundry and Machine Co.; rolls made at arsenal (see appendix); rolls will last from 15,000 to 20,000 barrels (Fig. 12); the rolls are 18 in. in diameter by 31 in. long and are provided with 11 grooves; the barrel passes through the last groove twice; this rolls the barrel from 25 to 25½ in. long. Gages—Plain snap gages. Production—40 per hr. for two men.

OPERATION D. STRAIGHTENING BARRELS UNDER DROP HAMMER

Transformation—Fig. 13. Number of Operators—Same operator who "catches" barrel straightens and saws ends in suboperation D-1. Description of Operation—Barrels come from the rolls and are straightened under drop hammer at same heat; usually takes six blows. Apparatus and Equipment Used—400-lb. Bement drop hammer (see Figs. 4 and 14). Gages—None. Production—Same as barrel rolling.

OPERATION D-1. SAWING ENDS OF BARRELS TO ROUGH LENGTH

Transformation—Fig. 15. Machine Used—Special double-ended saw, Fig. 16. Number of Operators per Machine—Same as operations C and D; a suboperation of D. Work-Holding Device—Special clamp, Fig. 16. Tool-Holding Devices—Saws on arbor. Cutting Tools—Special saws of tool steel ⅛ in. thick by 18 in. in diameter (see Fig. 16). Number of Cuts—One at each end. Cut Data—Saws run 1,500 r.p.m. Coolant—None. Average Life of Tool Between Grindings—600 barrels. Special Fixtures—None. Gages—None. Production—Same as rolling barrels.

OPERATION E. ANNEALING RIFLE BARRELS IN DRY LIME

Number of Operators—Operator C anneals. Description of Operation—After cutting off ends, barrels are placed in dry lime in the truck boxes, Fig. 17, and allowed to cool. Apparatus and Equipment Used—Boiler-iron boxes 16x47x16 in. deep, mounted on three 8-in. wheels so that barrels can be moved to any desired point (see Fig. 17). Gages—None. Production—Same as operations B, C and D.

OPERATION 6. MILLING BOTH ENDS TO 24 1/16 IN.

Transformation—Fig. 18. Machine Used—Lincoln type miller. Number of Machines per Operator—Two. Work-Holding Devices—Special clamps, Fig. 19, hold two barrels side by side, one butt and one muzzle at each end. Tool-Holding Device—Standard cutter arbor. Cutting Tool—6-in. side-milling cutter, Fig. 19. Number of Cuts—Two. Cut Data—Spindle speed, 125 r.p.m.; hand feed, about ⅝ in. per min. Coolant—Triumph cutting oil. Average Life of Tool Between Grindings—600 barrels. Special Fixture—None. Gages—Length gage (see Fig. 20). Production—90 per hr., two machines.

OPERATION 6-A. STAMPING THE LOT NUMBER ON BARREL

Number of Operators—One. Description of Operation—This stamps the lot number on the butt end of the barrel in order to identify the maker of the steel. Apparatus and Equipment Used—Bench, hand stamp and hammer. Gages—None. Production—200 per hr. per man.

OPERATION 2. CENTERING

Transformation—Fig. 21. Machine Used—Whiton two-spindle centering machine. Number of Operators per Machine—One. Work-Holding Devices—Held in screw vise with V-jaws. Tool-Holding Device—Drill chuck. Cutting Tools—

Drill and separate countersink; Midvale high-speed steel used. Number of Cuts—Two. Cut Data—Speed, 400 r.p.m. Coolant—Triumph cutting oil. Average Life of Tool Between Grindings—300 barrels. Special Fixtures—None. Gages—None. Production—45 per hr.

OPERATION 1. STRAIGHTENING BARREL

Number of Operators—Same operator as centers. Description of Operation—Barrels are revolved by hand on ordinary bench centers and high spots noted; these are then straightened with a hammer and straightening block, same as bar stock. Apparatus and Equipment Used—Bench centers, straightening blocks and copper hand hammer. Gages—None. Production—Included in operation 2; 20 per cent. require straightening.

OPERATION 8. SPOTTING MUZZLE, TURNING END FOR DRILLING AND TURNING

Transformation—Fig. 22. Machine Used—Prentice barrel-turning lathe (see Fig. 6). Number of Machines per Operator—Four. Work-Holding Devices—Driven with dog

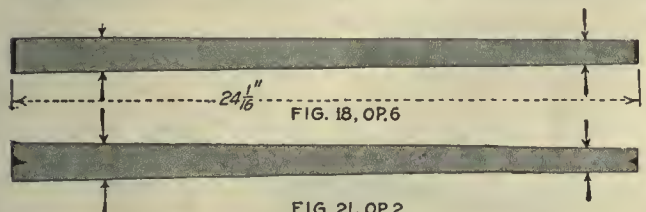

FIG. 18, OP. 6

FIG. 21, OP. 2

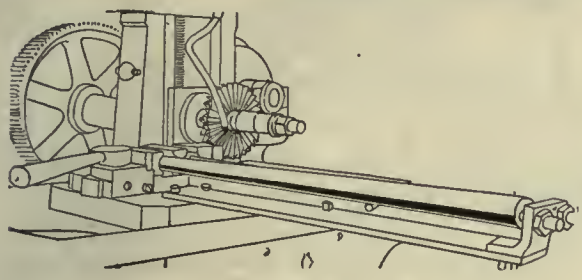
FIG. 19, OP. 6

FIG. 24

on centers (see Fig. 23). Tool-Holding Device—Regular tool holder. Cutting Tools—$\frac{5}{8}$ x $\frac{7}{16}$-in. A. A. Rex high-speed steel. Number of Cuts—One. Cut Data—Turned to fit dog on rough-turn operation; 200 r.p.m. Coolant—Compound. Average Life of Tool Between Grindings—8 to 10 barrels. Gages—Ring gages, Fig. 24. Production—4 per hr. per machine. Note—Cutting compound consists of 5 lb. of sal soda, 1 gal. of Triumph cutting oil, 5 gal. of water; this mixture is meant whenever compound is mentioned.

OPERATION 9. ROUGH-TURN

Transformation—Fig. 25. Machine Used—Prentice barrel lathe. Number of Machines per Operator—Four to six. Work-Holding Devices—Turned on centers, driven by dog on muzzle end (see Fig. 26). Tool-Holding Devices—Tools are held in arms pivoted in the center of lathe carriage beneath barrel:

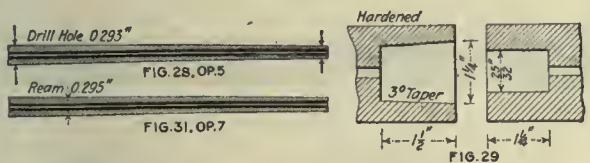

FIG. 28, OP. 5

FIG. 31, OP. 7

FIG. 29

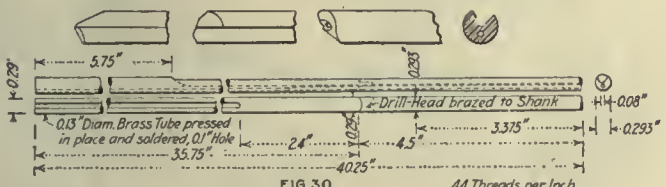

FIG. 30

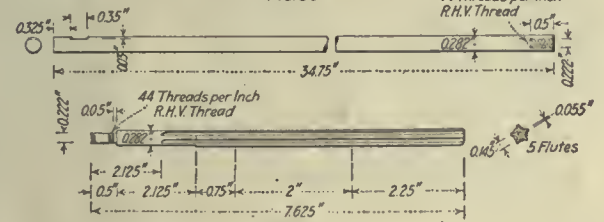

FIG. 32

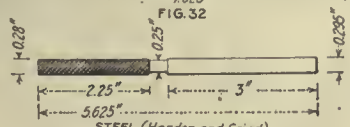

FIG. 33, OP. 7

these are guided by flat cams that control the distance of the cutting point from the center line of the barrel, turning it to the proper form, as shown in Fig. 26. Cutting Tools—$\frac{5}{8}$ x $\frac{7}{16}$-in. A. A. Rex high-speed steel. Number of Cuts—One. Cut Data—Speed, 200 r.p.m.; feed, 0.01 in. per revolution. Coolant—Compound, ¼-in. stream. Average Life of Tool Between Grindings—8 to 10 barrels. Gages—Snap gages, Fig. 27. Production—4 per hr. per machine.

OPERATION 9-A. STAMPING

Number of Operators—One. Description of Operation—Repetition of 6-A, which has been removed by turning in operation 9; this stamps the lot number on the butt end of the barrel in order to identify the maker of the steel. Apparatus and Equipment Used—Bench, hand stamp and hammer. Gages—None. Production—200 per hr. per man.

OPERATION 5. DRILLING THE BORE

Transformation—Fig. 28. Machine Used—Pratt & Whitney two-spindle barrel driller (see Fig. 7). Number of Machines per Operator—Two. Work-Holding Devices—Held by friction in

FIG. 20

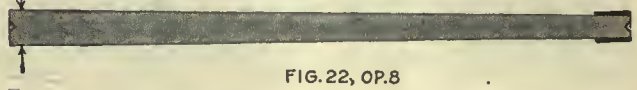
FIG. 22, OP. 8

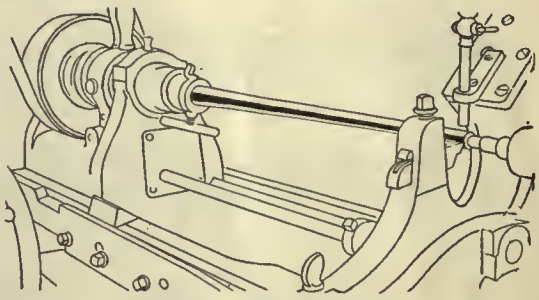
FIG. 23, OP. 8

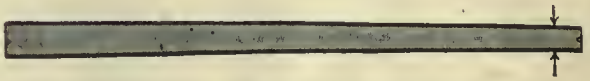
FIG. 25

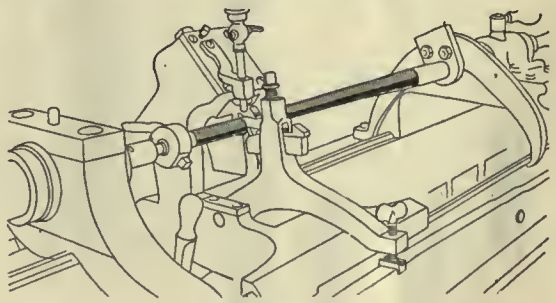
FIG. 26

FIG. 27

OPERATION 9

taper chuck at butt end; held in collet at muzzle end; drill guided close to muzzle, Fig. 29. Tool-Holding Device—Screw collet chuck; guided by bushing as in Fig. 29. Cutting Tool—Special barrel drill, 0.293 in. in diameter; see Fig. 30 for drill and shape of drill point. Number of Cuts—One. Cut Data—Barrels turn 1,800 to 2,000 r.p.m.; feed, ¾ in. per min. Coolant—Triumph cutting oil under 600 lb. pressure. Average Life of Tool Between Grindings—8 barrels. Gages—None. Production—30 min. per barrel, 4 barrels per hr. per machine.

OPERATION 7. REAMING

Transformation—Fig. 31. Machine Used—Ames Manufacturing Co. two-spindle barrel reamer (see Fig. 8). Number of Machines per Operator—Four machines, eight spindles. Work-Holding Devices—On V-block screw clamp at butt end (see Fig. 8). Tool-Holding Devices—Reamer held in collet by set-screw; collet held in two-jaw chuck. Cutting Tool—Reamer, 0.295 in., of Midvale high-speed steel, Fig. 32. Number of Cuts—One. Cut Data—Speed, 100 r.p.m.; feed, 10 in. per min. Coolant—Triumph cutting oil, forced in barrel by hand pump. Average Life of Tool Between Grindings—Sometimes 50 to 75 barrels; average, about 25. Gages—Fig. 33. Production—20 barrels per hr.

OPERATION 19. CHAMBERING TO WORKING SIZE

Transformation—Fig. 34. Machine Used—Pratt & Whitney horizontal turret. Number of Operators per Machine—One. Work-Holding Devices—Draw-in collet, steadyrest at butt end. Tool-Holding Devices—Turret spindles. Cutting Tools—Drills, counterbores and reamers, shown in Fig. 35; these leave from 0.001 to 0.002 in. for finish. Number of Cuts—See tools, Fig. 35. Cut Data—Speed, 180 r.p.m. for counterbore, 150 r.p.m. for others; hand feed. Coolant—Triumph cutting oil, ¼-in. stream. Average Life of Tool Between Grindings—25 barrels. Gages—Fig. 36. Production—20 per hr.

OPERATION 13. FIRST STRAIGHTENING

Number of Operators—One. Description of Operation—Straighten bore of barrel, taking out kinks; these are tested by sighting through the barrel and noting the eccentricity of the rings formed by the light; this is done in a darkened room and is known as the "ring system." Apparatus and Equipment Used—Similar to that shown in Fig. 70. Gages—None. Production—30 per hr.

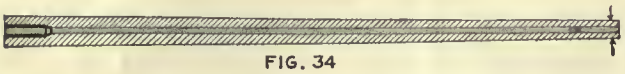

FIG. 34

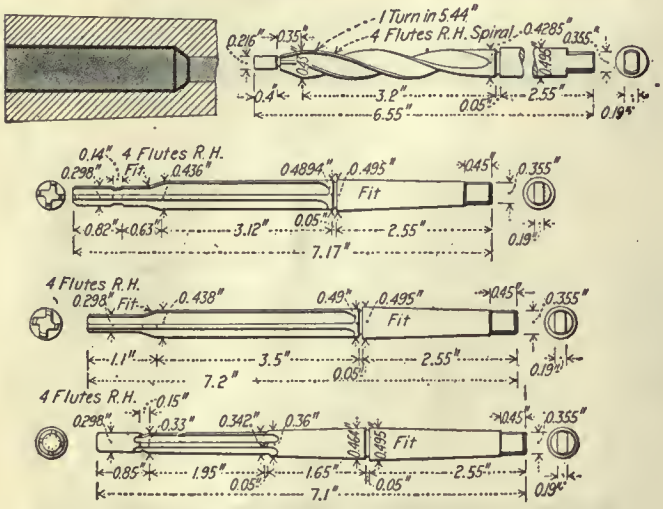

FIG. 35

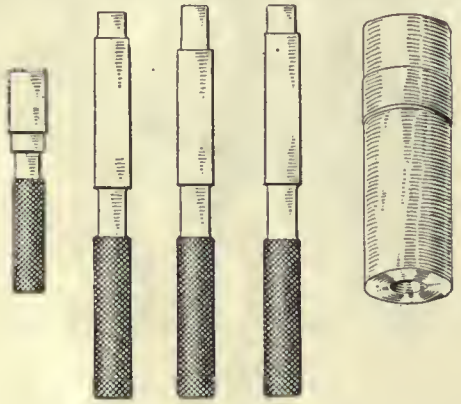

FIG. 36, CHAMBERING GAGES.
OPERATION 19

OPERATION 20. TURNING SPOTS TO RUN TRUE WITH BORE FOR HOLDING IN SKIVING OPERATION

Transformation—Fig. 37. Machine Used—Prentice lathe, 14-in. Number of Machines per Operator—Four. Work-Holding Devices—Work held on centers driven by dog, Fig. 38. Tool-Holding Devices—Tools held in tool post by setscrew. Cutting Tools—A. A. Rex high-speed steel. Number of Cuts—Two. Cut Data—Speed, 125 r.p.m.; feed, 100 to inch. Coolant—None. Average Life of Tool Between Grindings—12 to 15 barrels. Special Fixtures—None. Gages—Snap gages, Fig. 39. Production—21 per hr.

OPERATION 21. SKIVING OR FORMING BOTH ENDS OF BARREL

Transformation—Fig. 40. Machine Used—Pratt & Whitney Lincoln miller rebuilt. Number of Machines per Operator—Two. Work-Holding Devices—Draw-in chucks at each end, operated by ratchet wrench (see Fig. 101). Tool-Holding Device—Special vise on miller table (see Fig. 41-A). Cutting Tools—See Fig. 41-C for details. Number of Cuts—Two, roughing and finishing tools in same holder. Cut Data—Speed of work, 60 r.p.m.; feed of cutter, ¼ in. per min. Coolant—Triumph cutting oil; three ⅛-in. streams at each end of barrel. Special Fixtures—Revolving centers for ends of barrel (see Fig. 42). Gages—Ring and snap gages; for gage for front-sight stud, see Figs. 43-A and 43-B. Production—15 per hr. from two machines.

OPERATION 11. FINISH-TURN OUTSIDE OF RIFLE BARREL

Transformation—Fig. 44. Machine Used—Prentice barrel-turning lathe (see Fig. 6). Number of machines per Operator—Four. Work-Holding Devices—Work held on centers supported by backrest, same as in operation 9. Tool-Holding Device—Tool held in tool post by setscrew (see operation 9 and Fig. 6). Cutting Tools—$\frac{5}{8} \times \frac{7}{16}$-in. A. A. Rex high-speed steel. Number of Cuts—One. Cut Data—125 r.p.m.; feed, 0.01 in. per min. Coolant—Compound, ¼-in. stream. Average Life of Tool Between Grindings—About 8 barrels. Special Fixtures—Form or contour plates to bed of machine. Gages—Snap gages (see Fig. 46). Production—5 per hr.

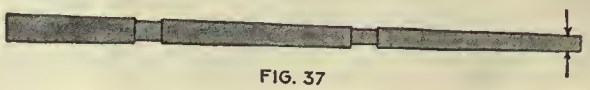

FIG. 37

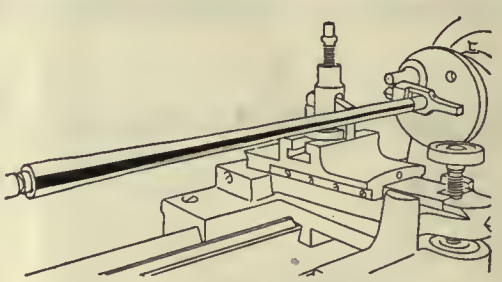

FIG. 38

FIG. 39

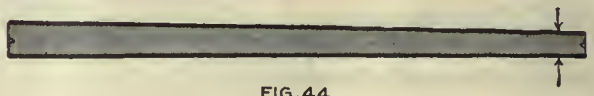

FIG. 44

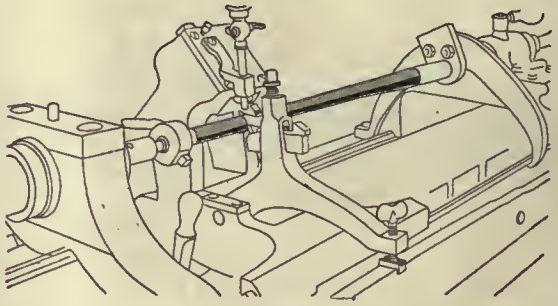

FIG 45

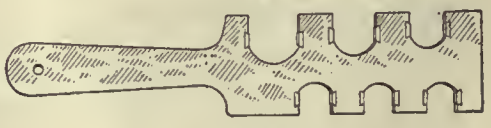

FIG. 46
OPERATION 11

OPERATION 12. FILING TO GAGE, BLENDING CONTOUR BETWEEN CUTS

Transformation—Fig. 47. Machine Used—Prentice speed lathe (see Fig. 48). Number of operators per Machine—One. Work-Holding Devices—Held on centers. Cutting Tools—8-in. mill file and 6-in. pillar file. Number of Cuts—Two. Coolant—None. Special Fixtures—None. Gages—Fig. 49. Production—About 53 per hr.

OPERATION 11-A. STAMPING LOT NUMBER ON BARREL

Number of Operators—One. Description of Operation—Stamping lot number. Apparatus and Equipment Used—Hammer, block and stamp. Gages—None. Production—200 per hr.

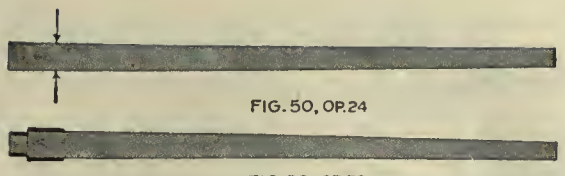

FIG. 50, OP. 24

FIG. 52, OP. 32

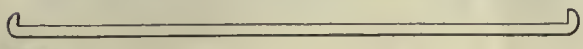

FIG. 51-A, OP. 24

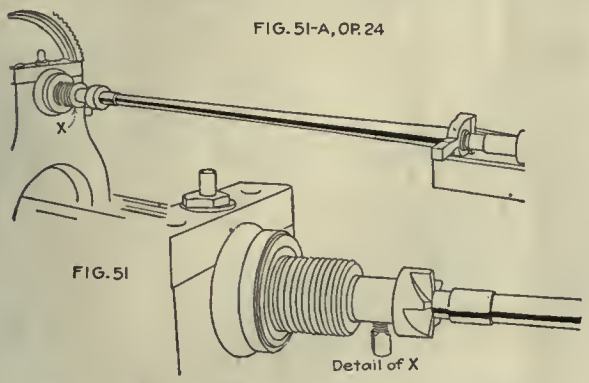

FIG. 51

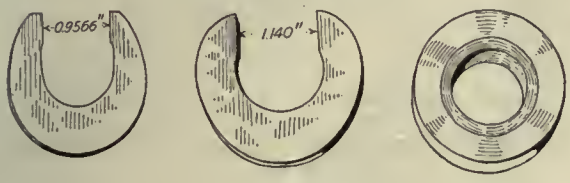

FIG. 53, OP. 32

OPERATION 24. MILLING MUZZLE TO WORKING LENGTH, 24 7/8-IN. LONG

Transformation—Fig. 50. Machine Used—Springfield 24-in. lathe. Number of Operators per Machine—One. Work-Holding Devices—Work is held on pilot of end mill and on tailstock center; kept from turning by dog, Fig. 51. Tool-Holding Devices—Held in taper of spindle hole of lathe. Cutting Tools—End mill with 0.293 pilot. Number of Cuts—One. Coolant—Triumph cutting oil. Average Life of Tool Between Grindings—About 75 barrels. Special Fixtures—None. Gages—Length gage, Fig. 51-A. Production—100 per hr.

OPERATION 32. FILING BUTT AND TENON

Transformation—Fig. 52. Machine Used—Prentice speed lathe. Number of Operators per Machine—One. Work-Holding Devices—Work held on center, driven by dog (see Fig. 48). Cutting Tools—8-in. mill and 6-in. pillar file. Number of Cuts—Two. Cut Data—1,500 r.p.m. Coolant—None. Gages—Snap gage, Fig. 53. Production—28 per hr.

FIG47

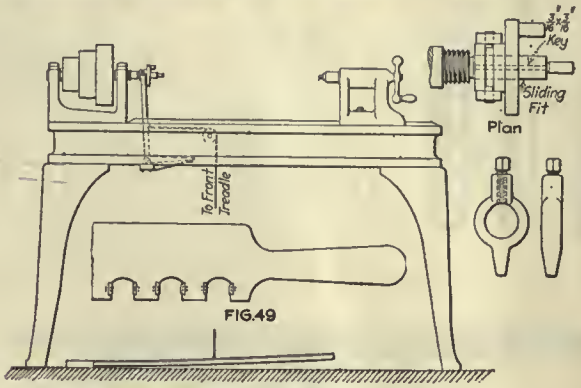

FIG. 49

FIG48
OPERATION 12

FIG.40

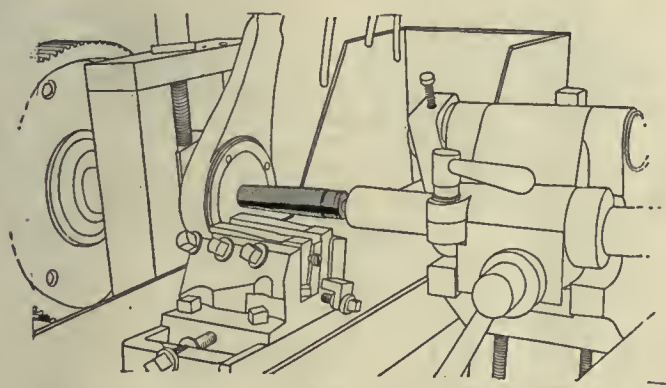

FIG.41-A

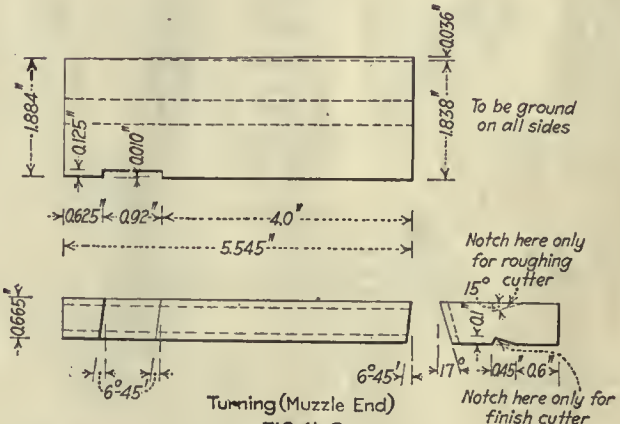

Turning (Muzzle End)
FIG.41-C

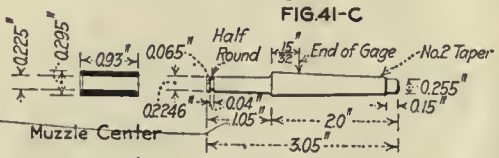

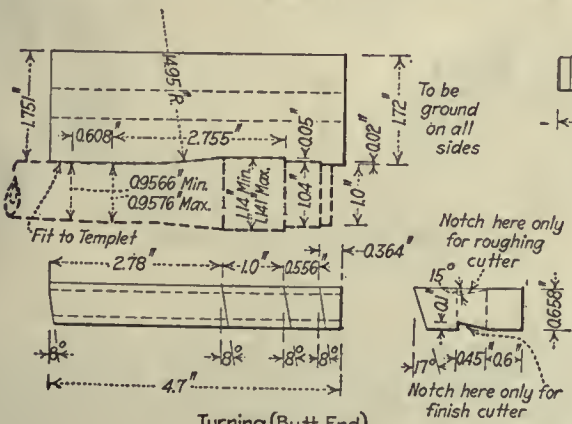

Turning (Butt End)
FIG.41-B

OPERATION 21

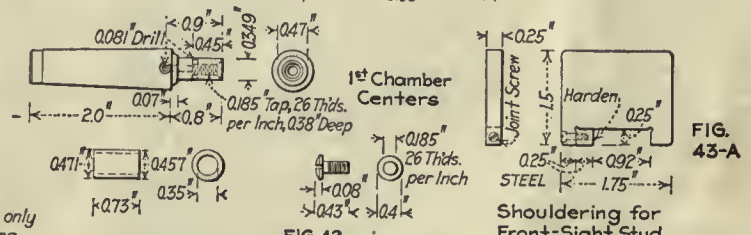

FIG. 42

FIG. 43-A

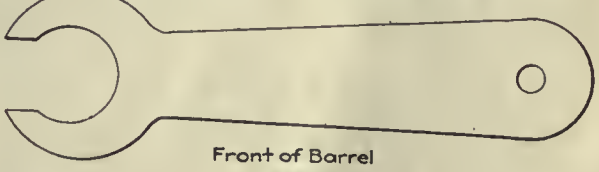

Front of Barrel
FIG.43-B

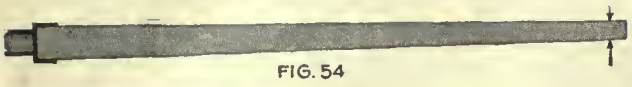

FIG. 54

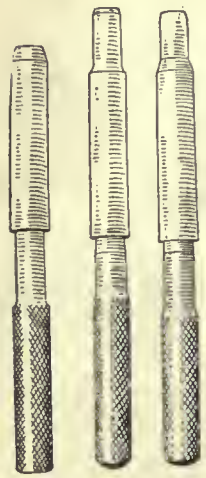

FIG. 57

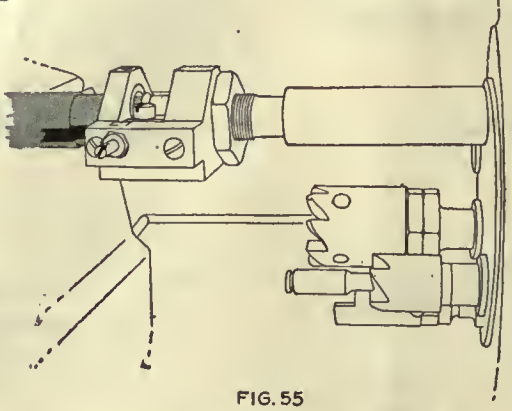

FIG. 55

OPERATION 33

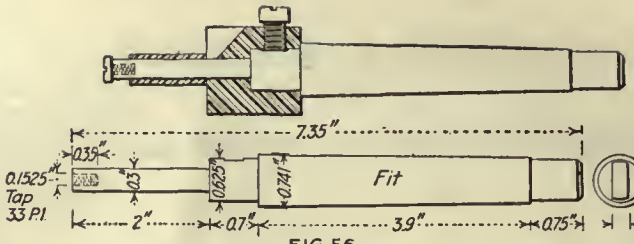

FIG 56

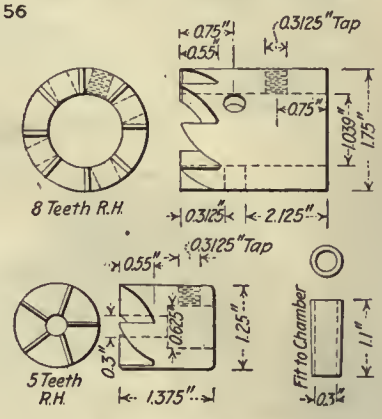

FIG. 56

FIG. 58

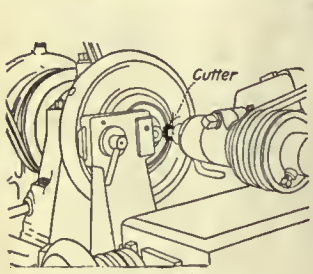

FIG. 59

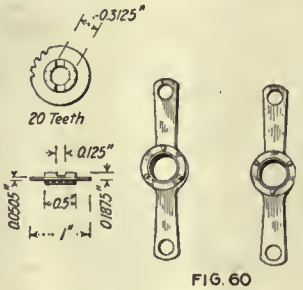

FIG. 60

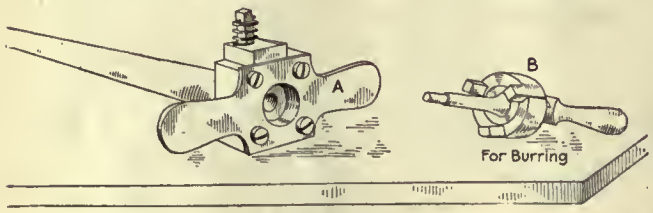

FIG. 59-A
OPERATION 34

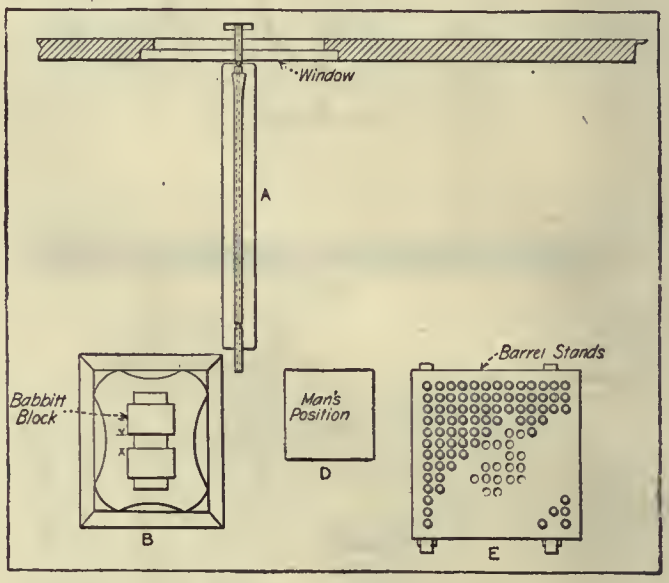

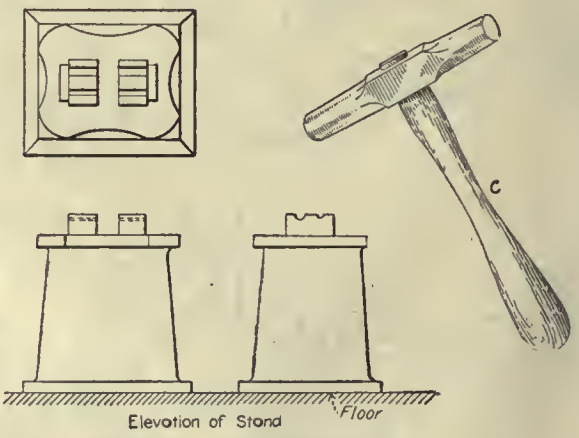

FIG. 70. OPERATION 25

OPERATION 33. FINISH BUTT TENON SHOULDER, NECK, AND REAM REAR END OF CHAMBER FOR THREADING MACHINE CENTER

Transformation—Fig. 54. Machine Used—Pratt & Whitney 10-in. swing hand screw machine. Number of Operators per Machine—One. Work-Holding Devices—Work held in draw-in chuck with steadyrest at butt end. Tool-Holding Device—Regular taper shank. Cutting Tools—One hollow box mill, as in Fig. 55, together with facing and finishing mill, shown in detail in Fig. 56. Number of Cuts—Three. Cut Data—Barrel turns 150 to 180 r.p.m. Coolant—Triumph cutting oil, ¼-in. stream. Average Life of Tool Between Grindings—50 barrels. Gages—Ring gages for diameter and shoulder length; plug gages for length of butt with relation to chamber (see Fig. 57). Production—50 per hr.

OPERATION 34. CUTTING THREAD FOR RECEIVER AND MARKING FOR DRAW

Transformation—Fig. 58. Machine Used—Pratt & Whitney thread miller. Number of Machines per Operator—Two. Work-Holding Devices—Regular draw chuck in connection with special sleeves that fit over barrel near muzzle and butt. Tool-Holding Devices—Regular thread-milling arbor. Cutting Tools—Milling cutter, as shown in Fig. 59. Number of Cuts—One. Cut Data—Barrel turns 30 r.p.m.; milling cutter, 240 r.p.m. Coolant—Triumph cutting oil. Gages—Thread and marking gage, Fig. 60. Production—36 per hr. on two machines. Note—A suboperation marks what is called the "draw" line; a small fixture, Fig. 59-A, screws on the barrel, and when tight against the shoulder the chisel-pointed plunger is struck and marks the barrel; this becomes the working point in future operations; the tool B in Fig. 59-A removes the burr.

OPERATION 23. MILLING FRONT-SIGHT SPLINE

Transformation—Fig. 61. Machine Used—Pratt & Whitney Lincoln miller. Number of Machines per Operator—Three. Work-Holding Devices—Special fixtures that hold barrels by studs entering bore and chamber; the back-end clamping fixture is shown in Fig. 62; the chamber plugs are mounted in the swinging levers AA; the lever and cams BB clamp barrels in place; a knife-edge stop which locates the barrel by draw mark put on as in Fig. 59-A; this locates the spline for

FIG. 61

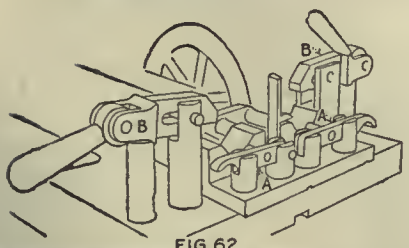

FIG. 62

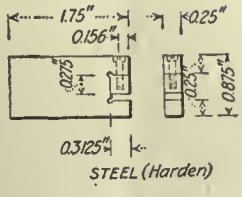

FIG. 64

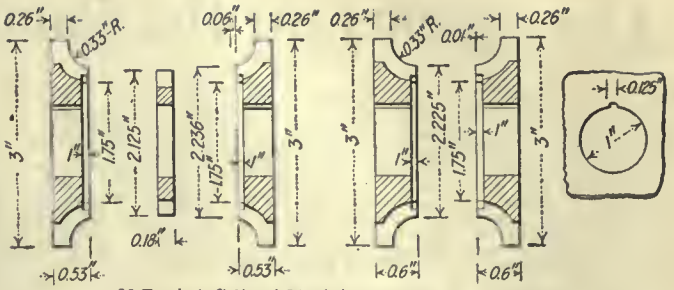

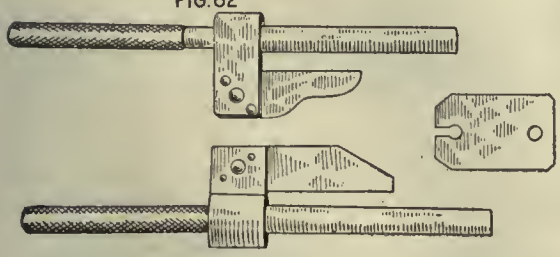

FIG. 64

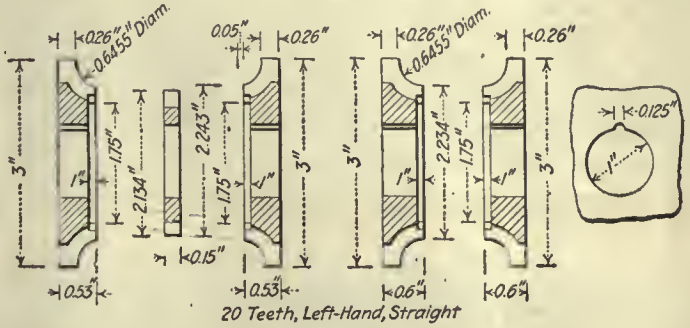

OPERATION 23

FIG. 63

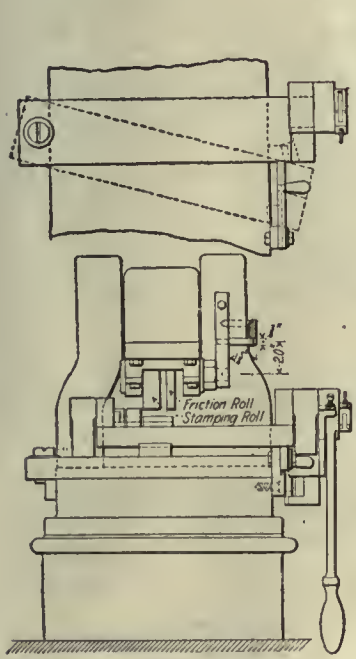

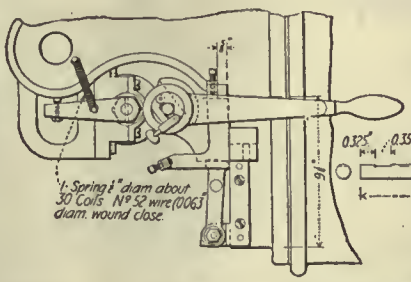

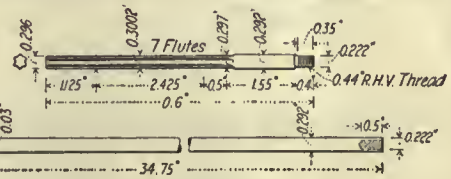

FIG. 68

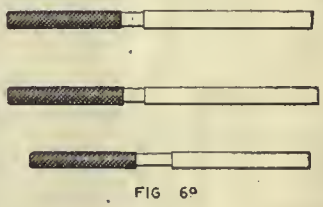

FIG 69a

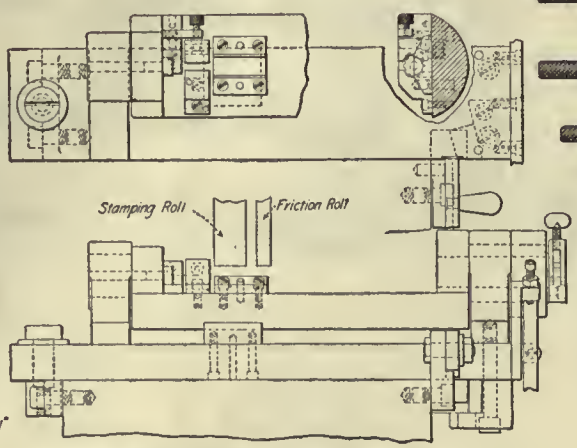

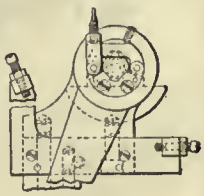

FIG 65

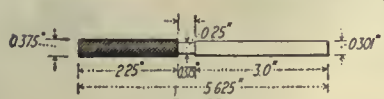

FIG. 69
BORE GAGE. MAX.
STEEL. HARDEN & GRIND.
MUST NOT ENTER BORE

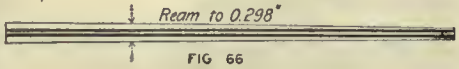

FIG 66

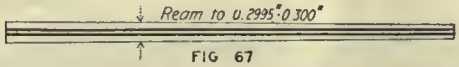

FIG 67

FIG. 69
BORE GAGE. MIN.

STEEL MUST GO THROUGH BORE

OPERATION Nº 39½, 17 & 26

front-sight stud at 90 deg. from "draw" mark; the other barrel is placed with the spline down and the under side of the stud base milled flush with the barrel; both are run through at one cut. Tool-Holding Devices—Standard milling-cutter arbor. Cutting Tools—Interlocking form-milling cutters, Fig. 63; Victor high-speed steel. Number of Cuts—Two. Cut Data—Speed, 60 r.p.m. Coolant—Triumph cutting oil. Average Life of Tool Between Grindings—250 to 300 barrels. Gages—Fig. 64. Production—50 per hr. per man.

OPERATION 39½. ROLLING STAMP OF SHELL AND FLAME, S. A. AND YEAR

Machine Used—Special rolling machine, Figs. 103 and 65. Number of Operators per Machine—One. Work-Holding Devices—Special chuck with lever for rotating barrel. Tool-Holding Device—Special arbor for stamp. Cutting Tool—Special stamp roll. Number of Cuts—One. Coolant—None Gages—None. Production—150 per hr.

Operations on the Barrel and the Fixed Stud

OPERATION 17. REAMING TO 0.298 IN.

Transformation—Fig. 66. Machine Used—Ames Manufacturing Co. two-spindle barrel reamer. Number of Machines per Operator—Four. Work-Holding Devices—Work is held on V-blocks by screw at butt end, Fig. 8. Tool-Holding Devices—Reamer held in collet with ¼-in. setscrew. Cutting Tools—0.298-in. reamer, Midvale special high-speed steel. Number of Cuts—One. Cut Data—Speed, 100 r.p.m.; feed, 10 in. per min. Coolant—Triumph cutting oil forced into barrel by hand pump. Average Life of Tool Between Stonings—25 to 30 barrels. Gages—Similar to Fig. 33. Production—About 18 barrels per hour.

OPERATION 26. FINISH-REAMING TO 0.300 IN.

Transformation—Fig. 67. Machine Used—Same as operation 17. Number of Operators per Machine—Same as operation 17. Work-Holding Devices—Same as operation 17. Tool-Holding Devices—Same as operation 17. Cutting Tools—Scraping reamer, Fig. 68; this is maximum diameter for only a portion of its length near the center. Number of Cuts—Same as operation 17. Cut Data—Same as operation 17. Coolant—Same as operation 17. Average Life of Tool Between Grindings—Same as operation 17. Special Fixtures—Same as operation 17. Gages—See Fig. 69. Production—Same as operation 17.

OPERATION 25. FINAL STRAIGHTENING OF BORE

Number of Operators—One. Description of Operation—The operator places barrels on hollow centers, as shown at A, Fig. 70; the outer end is of smoked glass, having fine rings scraped on it; revolving the barrel by hand on the hollow centers shows whether the light rings are concentric or eccentric; if eccentric they are straightened by placing barrel across the babbitt block on top of the stands shown at B and striking with the copper hammer C; the operator stands at D, and the barrels to be tested are in the rack at E. Apparatus and Equipment Used—Testing centers as described above, straightening blocks and copper hammer. Gages—None. Production—20 per hr. Note—Some barrel straighteners use what is known as the "line" method, by which the barrel is sighted across a horizontal line in front of a window; if the two lines that show in the barrel are parallel, the barrel is straight; both the ring and the line methods are used in the inspection.

Making the rolls for shaping the rifle barrels the required size and shape involves an interesting process. The rolls blanks themselves, Fig. 97, are 18 in. in diameter when the rolls are new. They are, however, turned down as they wear, and the grooves are cut, so that the rolls can be utilized until they are about 15 in. in diameter, a total reduction of 3 in. in diameter.

After the rolls have been turned to their proper dimension, they are grooved by a special device, shown in Fig. 98. This consists principally of a base that is clamped on a lathe carriage in place of the usual cross-slide, the attachments being so located that the turning tool held in the tool post F will be in its proper position in regard to the roll to be cut. The shaft A, Fig. 98, is driven through a universal joint by an auxiliary shaft that runs in bearings attached to each end of the lathe headstock.

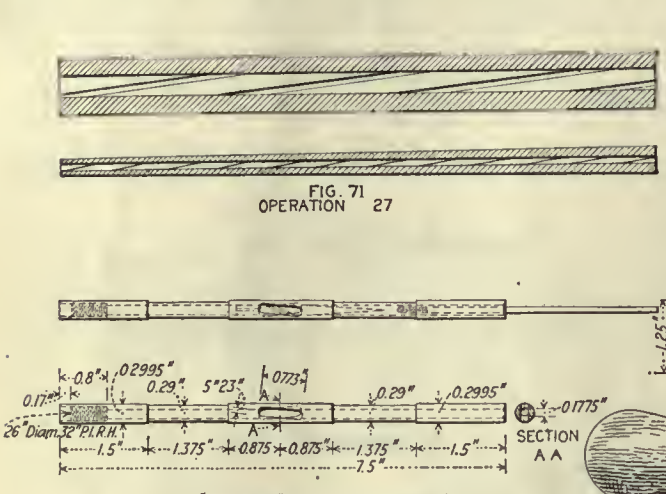

FIG. 73

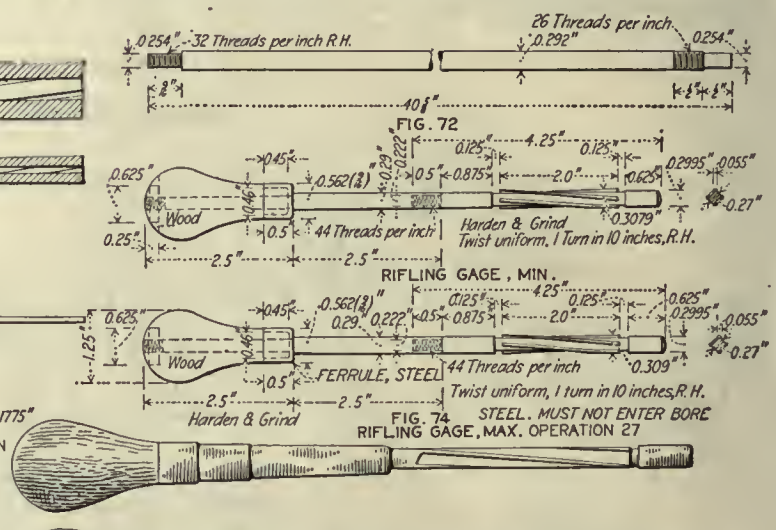

FIG 74, OPERATION 27.

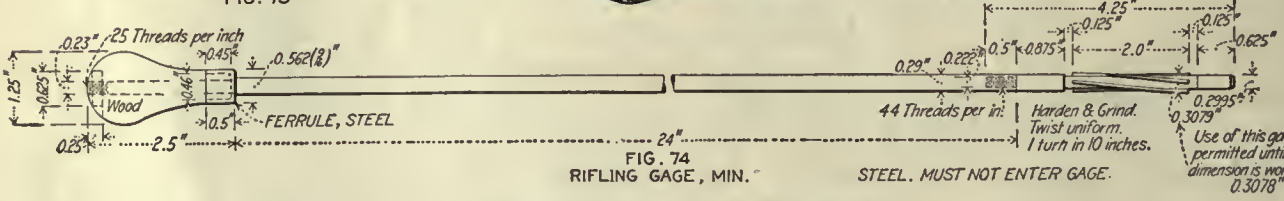

FIG. 74
RIFLING GAGE, MIN.
STEEL. MUST NOT ENTER GAGE.

OPERATION 27. RIFLING THE BORE

Transformation—Fig. 71. Machine Used—Pratt & Whitney "grasshopper type," Fig. 104. Number of Machines per Operator—Six. Working-Holding Devices—Work is held by collet, which clamps barrel on curved part of butt end; muzzle end is supported by bushing fitted to steadyrest on machine. Tool-Holding Devices—Tools are held in rifling rod, Fig. 72; taper pin inside of box feeds cutters out at end of each stroke. Cutting Tools—Two scraping cutters, Fig. 73. Cut Data—Machine makes eight strokes per minute; this gives about 37.4 ft. per minute cutting speed. Coolant—Triumph cutting oil, two ¼-in. streams at each end of barrel. Average Life of Tool Between Stonings—6 to 8 barrels. Gages—Fig. 74. Production Time—46 min. for each machine, averaging about 6 min. per barrel per operator.

The latter is turned by means of a chain from the feed cone on the back of the lathe spindle, by a suitable sprocket that clamps around the feed cone. The shaft A carries on its inner end a beveled pinion B that meshes into and drives a beveled gear fastened to the lower side of the spur gear C. The beveled pinion B can be thrown out of mesh by raising the handle J and can be locked in position by swinging the latch K so that the handle J

FIG 75

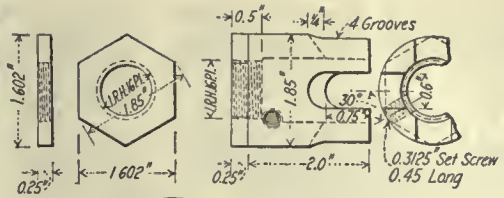

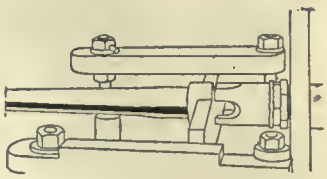

FIG. 76

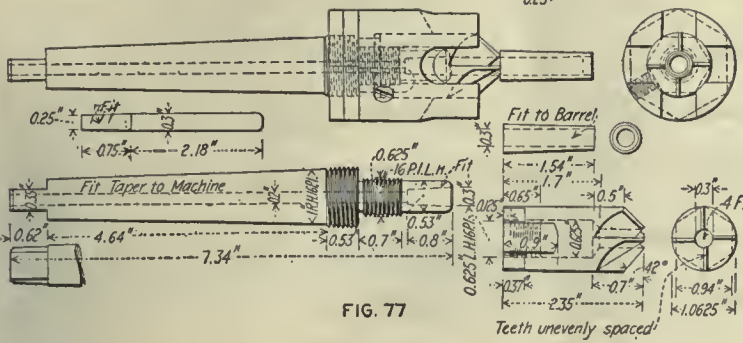

FIG. 77

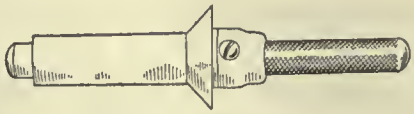

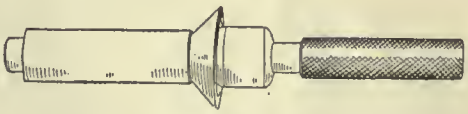

FIG. 78

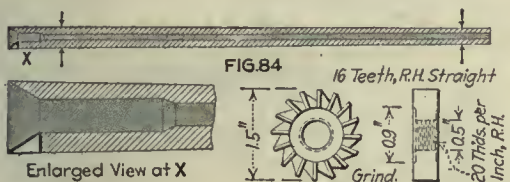

FIG.84

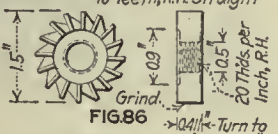

FIG.86

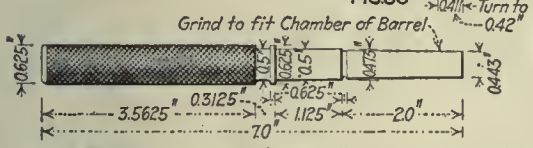

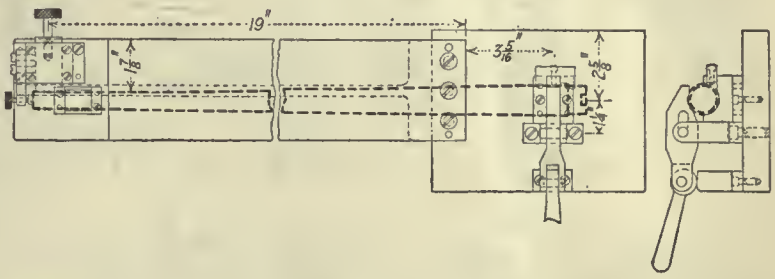

FIG.87-A

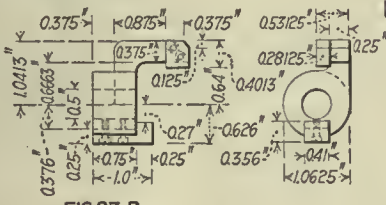

FIG.87-B

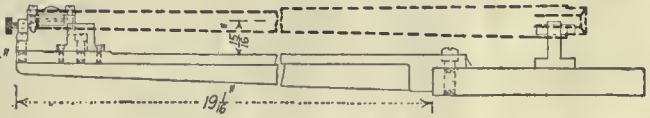

FIG.85

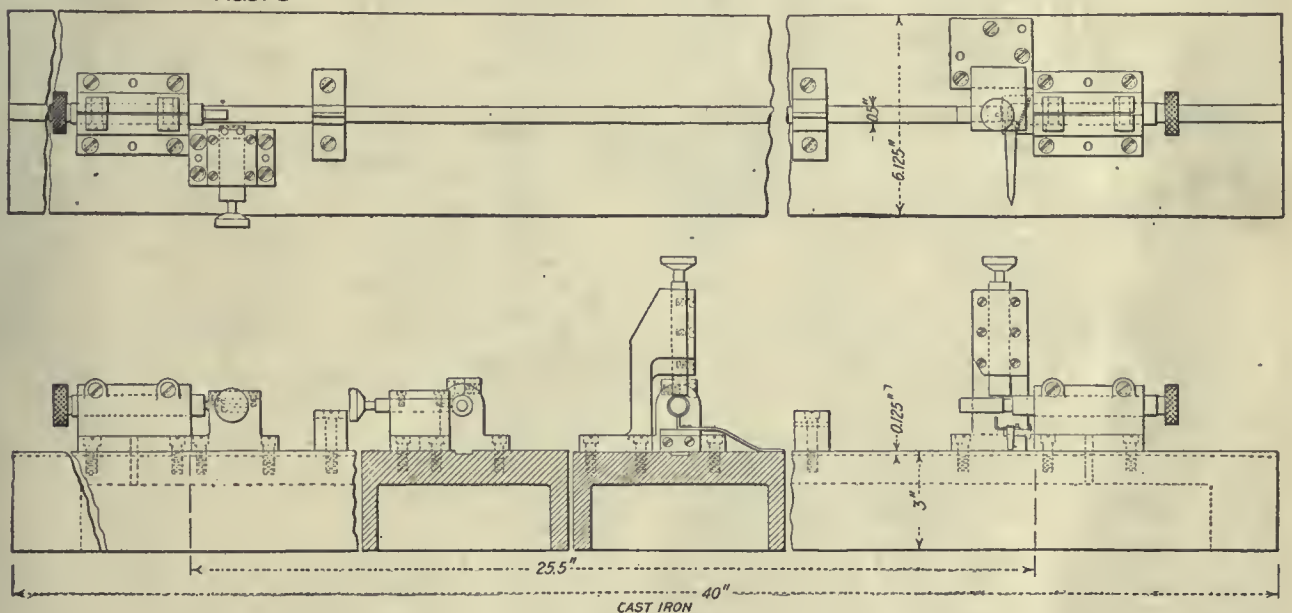

FIG. 87-C

OPERATION 37

OPERATION 28. BURRING THREAD AND SHOULDER

Number of Operators—One. Description of Operation—Removing burrs with hollow mill held in the hand. Apparatus and Equipment Used—Hollow mill, Fig. 59-A. Gages—None. Production—100 per hr. Note—This is a portion of operation 34, the burr being removed by hand with the tool shown at B in Fig. 59-A.

OPERATION 35. CUTTING CHAMBER RAMP

Transformation—Fig. 75. Machine Used—Garvin 16-in. lathe. Number of Operators per Machine—One. Work-Holding Devices—Work held by double-ended threaded dog which screws over butt thread as shown in Fig. 76; the straps front and back prevent its revolving while it is centered by a pilot on the facing cutter. Tool-Holding Devices—Special arbor with

pilot, Fig. 77. Cutting Tools—See Fig. 77. Number of Cuts—One. Cut Data—Cutter runs 70 r.p.m., hand-feed. Coolant—Triumph cutting oil. Average Life of Tool Between Grindings—100 barreis. Gages—Plug gages, Fig. 78. Production—50 per hr.

OPERATION 36-A. BURRING CHAMBER

Number of Operators—One. Description of Operation—Using hand mill to burr inside of chamber and outside of chamber so gages will fit. Apparatus and Equipment Used—Hand mill, with inserted cutter, Fig. 83. Gages—None. Production—125 per hr.

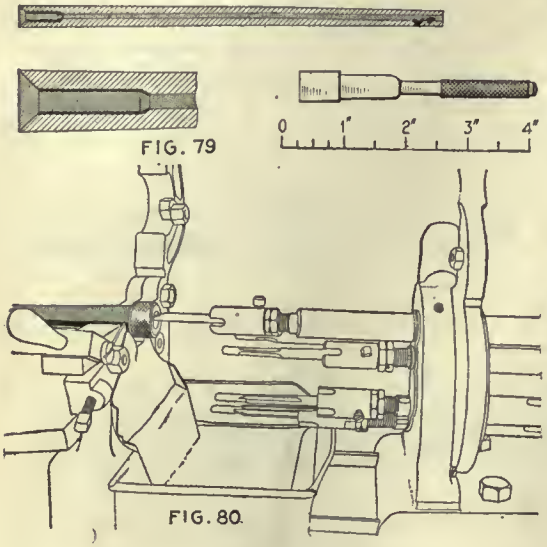

FIG. 79

FIG. 80.

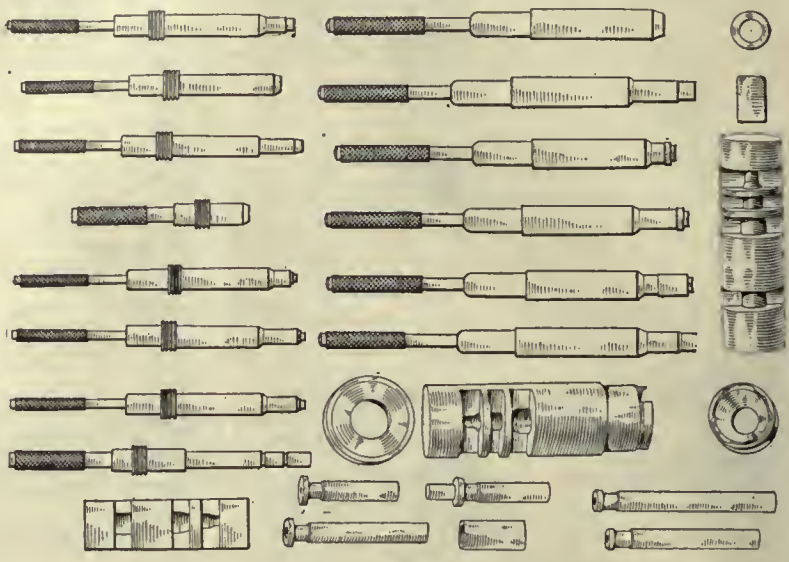

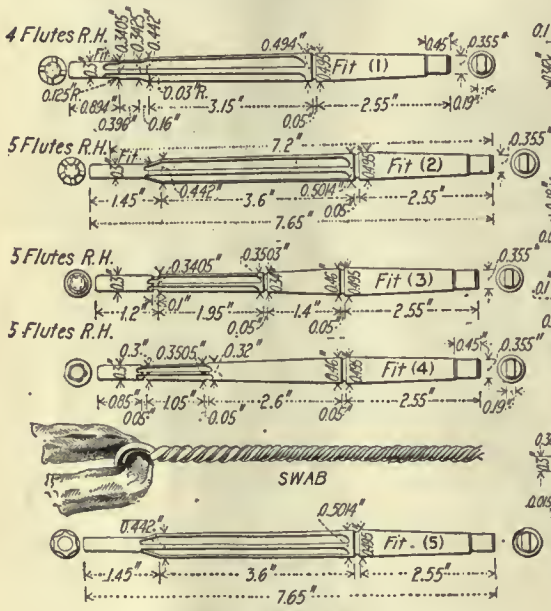

FIG. 81, OPERATION 36

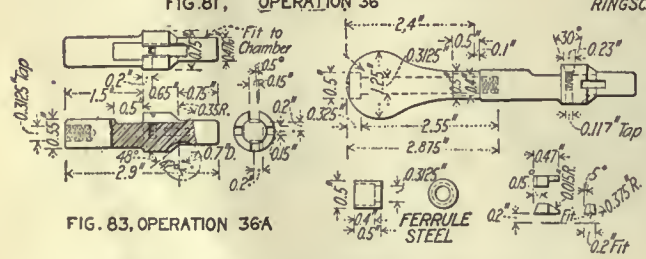

FIG. 83, OPERATION 36-A

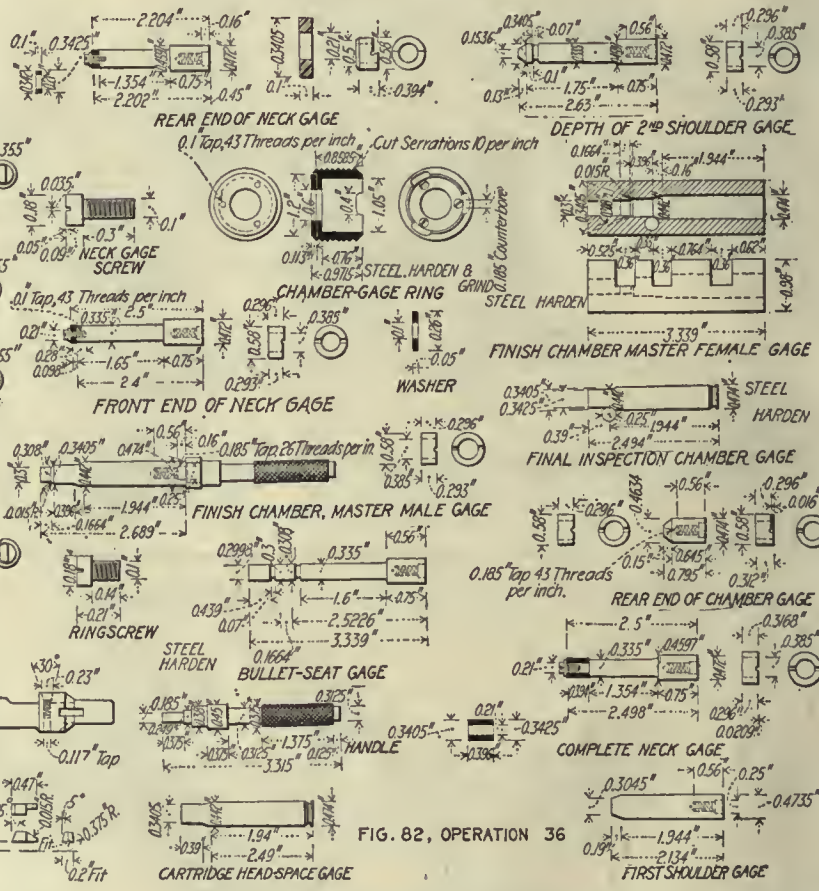

FIG. 82, OPERATION 36

OPERATION 36. CHAMBERING TO FINISH

Transformation—Fig. 79. Machine Used—Pratt & Whitney hand screw machine, Fig. 80. Number of Operators per Machine—One. Work-Holding Devices—Draw-in chuck and steadyrest at butt end; thread protected by nut, as shown in Fig. 80. Tool-Holding Devices—Regular taper spindle. Cutting Tools—One counterbore and the four reamers shown in Fig. 81. Number of Cuts—Five. Cut Data—Speed, 90 and 100 r.p.m.; hand feed; first three cuts are made at 100 r.p.m., last two at 90 r.p.m. Coolant—Triumph cutting oil, ¼-in. stream. Average Life of Tool Between Grindings—50 barrels. Gages—Fig. 82; chamber depth is gaged from the shoulder of the butt; the cup gage A slips over the thread until the three raised points bear against the shoulder, then tbe various chamber gages shown below are slipped through the cup and the chamber depth gaged from the outer surface. Production—20 per hr. Note—The swab shown in the machining diagram is run into the chamber before the final reaming, to clear out all chips; this is done in a number of operations to prevent the possibility of chips getting on the "scrape" reamer and scratching the surface.

OPERATION—37. HAND-MILLING EXTRACTOR CUT

Transformation—Fig. 84. Machine Used—Garvin hand miller. Number of Operators per Machine—One. Work-Holding Devices—Held in special fixture, Fig. 85; locates it by front spline. Tool-Holding Devices—Arbor and taper collet. Cutting Tools—Milling cutter 1¼ in. in diameter, $\frac{7}{16}$ in. wide, made from Victor high-speed steel, Fig. 86. Number of Cuts—One. Cut Data—125 r.p.m., hand feed. Coolant—Triumph cutting oil. Average Life of Tool Between Grindings—500 to 600 barrels. Gages—Fig. 87. Production—75 per hr. Note—Gage 87-B not only gages the width of the extractor cut, but also locates it with reference to the draw line; this is further tested by the stand gage, Fig. 87-C.

OPERATION 37-A. BURRING EXTRACTOR CUT

Number of Operators—One. Description of Operation—Hand burring with file. Apparatus and Equipment Used—File. Production—125 per hr.

is prevented from rising. The gear *C* drives the gear *D*, which carries the cam *E* attached to its upper surface.

The tool post *F* can slide across the block *G* under control of the cam cut on the inside of *E*. The block *G* is fastened to the wormwheel *H* and turns with it when the worm *I* is revolved by means of the miter gears *L* and the spur gear *M*, which are driven from the shaft *A*.

The cutting of these grooves may be likened to the backing off of milling cutter teeth, as the tool must start at the small end of the barrel and gradually increase the depth of the groove until the butt end is reached. It

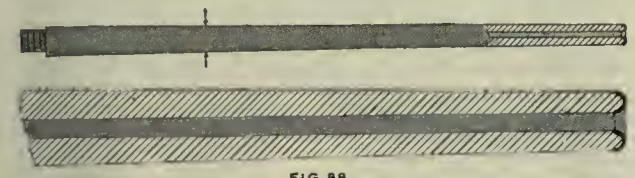

FIG. 88

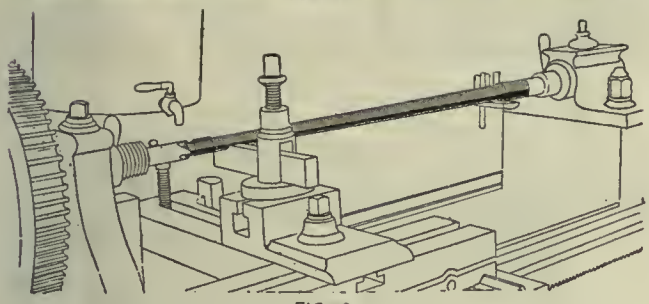

FIG. 89

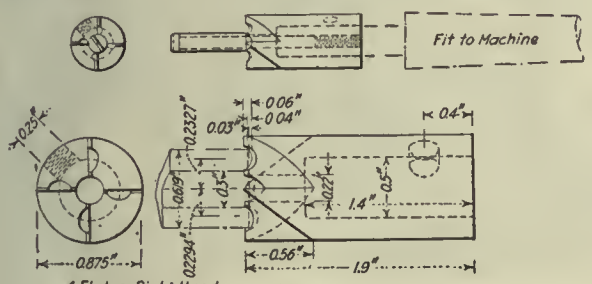

FIG. 90

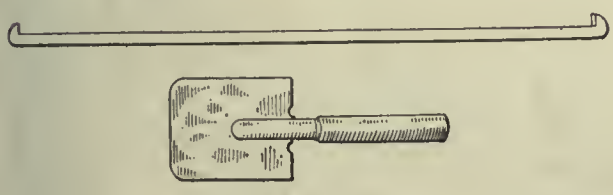

FIG. 91

OPERATION 38

must then snap back to begin cutting the small end of the groove during the next revolution of the roll. This means that the in and out action of the cutting tool must be positively timed to the revolutions of the roll, which is accomplished by the gearings shown.

The follower on one end of the tool block is held in contact with the cam by a heavy spring like that in the backing-off attachment. The gears *B*, *C* and *D* operate the cam *E* so that the tool is gradually moved near the center of the lathe as the roll revolves. On completing its revolution the cam *E* allows the tool block to snap back out of the deep cut and again begins on the small end of the barrel. At the same time the tool in the post *F* is being gradually turned around the axis of the block *G* by the wormwheel *H* so that it is automatically fed from one side of the groove to the other. The layout of the cams for the various grooves is shown in Fig. 99, all necessary diameters being given. These diameters begin at 1.34 in. for the large end of the barrel and reduce 0.01 in. for each groove until the tenth groove, which is 1.25 in. This and the eleventh groove are of like radius.

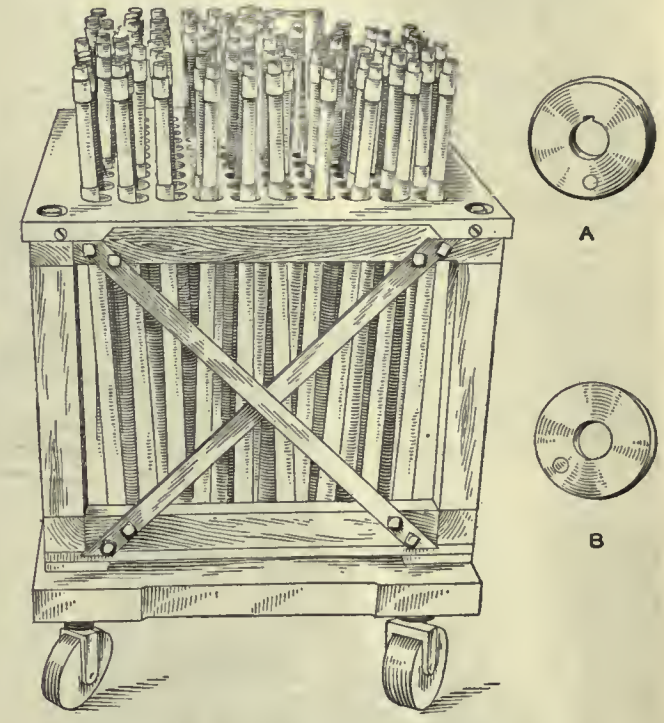

FIG. 96. TRUCKS FOR RIFLE BARRELS

From the time the barrels are turned they are handled in special trucks, as shown in Fig. 96, holding 100 barrels each. These trucks are easily rolled from one machine to another and prevent damage to the barrels. After the thread is milled on the butt end for the receiver, the muzzle end is always placed down, so as to protect the thread.

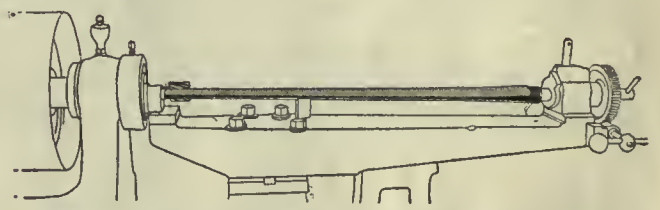

FIG. 93

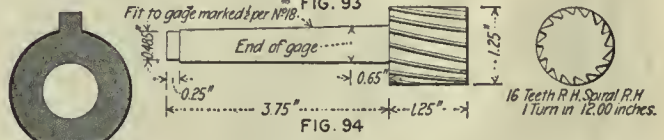

FIG. 94

FIG. 92

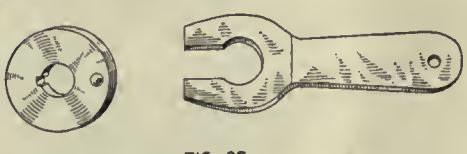

FIG. 95

OPERATION 38½

OPERATION 38. ROUNDING LIPS OF MUZZLE

Transformation—Fig. 88. Machine Used—Regular 16-In. engine lathe. Number of Operators per Machine—One. Work-Holding Devices—Barrel is held on center at butt end; muzzle end is supported as shown in Fig. 89. Tool-Holding Devices—Milling tool held on arbor in lathe spindle. Cutting Tools—Special facing cutter with pilot, Fig. 90. Number of Cuts—One. Cut Data—Speed of lathe, 70 r.p.m. Coolant—Triumph cutting oil, ⅛-in. stream. Average Life of Tool Between Grindings—150 barrels. Gages—Contour of lips and length gage, Fig. 91. Production—100 per hr.

OPERATION 38½. HAND-MILLING SEAT FOR FIXED STUD

Transformation—Fig. 92. Machine Used—Whitney hand miller. Number of Operators per Machine—One. Work-Holding Devices—Special fixture, Fig. 93. Cutting Tools—Special milling cutter, Fig. 94. Number of Cuts—One. Cut Data—Speed of milling cutter, 125 r.p.m.; barrel, 30 r.p.m. Coolant—None. Average Life of Tool Between Grindings—150 barrels. Gages—Plug and snap, Fig. 95. Production—60 per hr.

OPERATION 39. FILING MUZZLE

Gages—Ring gages for diameter, as shown in Fig. 95.

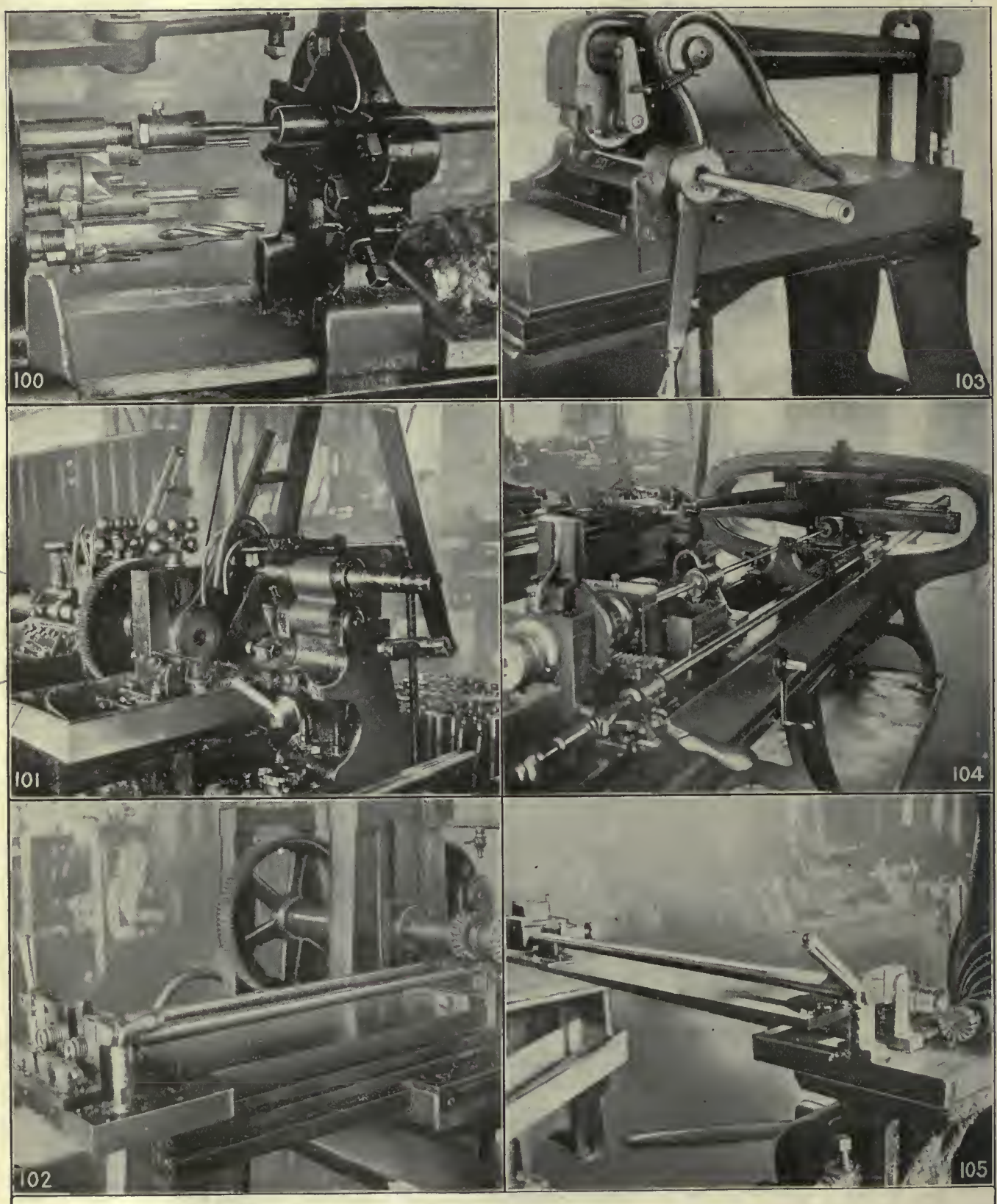

AS THE MANUFACTURE OF THE RIFLE BARREL PROCEEDS, THE OPERATIONS BECOME OF INCREASING INTEREST

Fig. 100—Chambering. Fig. 101—Skiving. Fig. 102—Spline milling. Fig. 103—Stamping. Fig. 104—Rifling. Fig. 105—Milling extractor cut

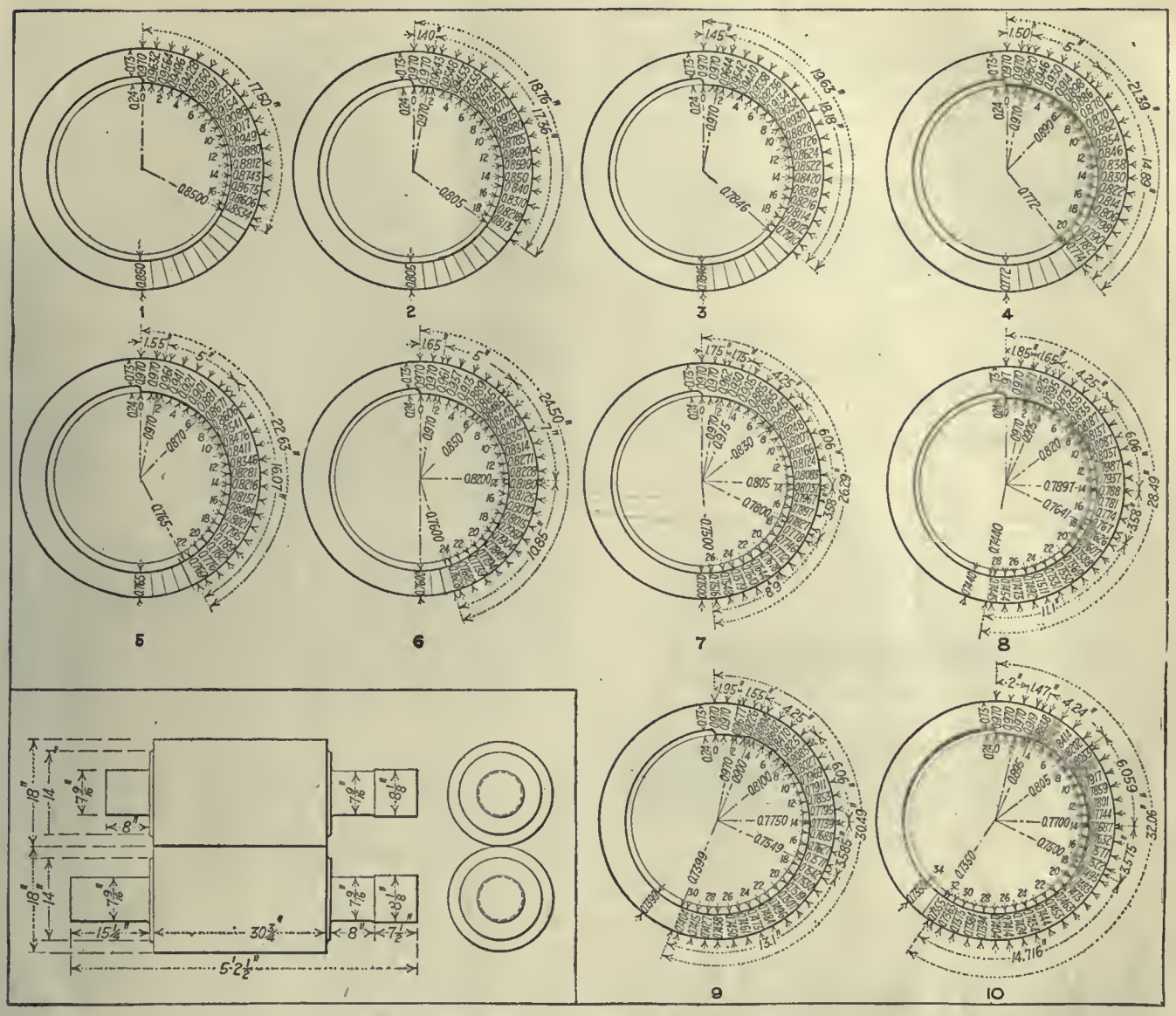

FIGS. 97 AND 99. BLANKS FOR BARREL ROLLS, AND CAMS USED IN GROOVING THEM

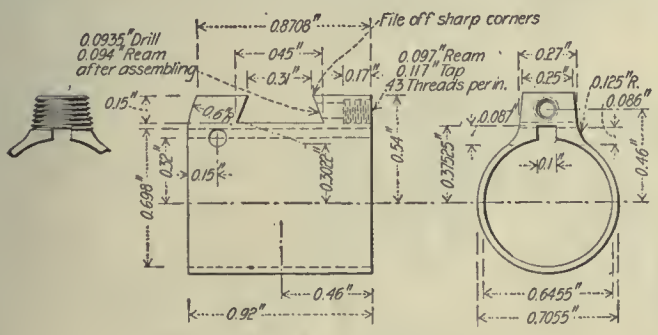

FIG. 106. THE FIXED STUD

The fixed stud, as shown in detail in Fig. 106, is forced over the muzzle end of the barrel and forms the base for the front sight. The fixed stud is made from a drop forging that is long enough to make six studs. These are sawed apart after the hole is drilled and reamed and the outside form-milled in operations 1, 2 and 5. When finshed, the stud is a thin shell, the outside diameter being 0.7055 and the bore 0.6455 in. It is made from Class D steel, 0.80 in. square. The sequence of operations is presented in the accompanying table.

A. Forging from bar
C. Annealing
C-1. Pickling
B. Trimming
1. Straddle-milling both ends
2. Drilling bore for barrel
5. Form-milling outside lengthwise
6. Milling top and stud crosswise, cutting apart
3. Reaming bore for barrel
4. Squaring ends to finish length
10. Milling serrations on rear end of lug
9. Spilning
7. Drilling screw holes
8. Tapping screw holes
12½. Filing and cornering operations 8, 9 and 10
12. Profiling dovetail cut and top of lug to finish
13. Burring screw hole and filing to finish
14. Polishing

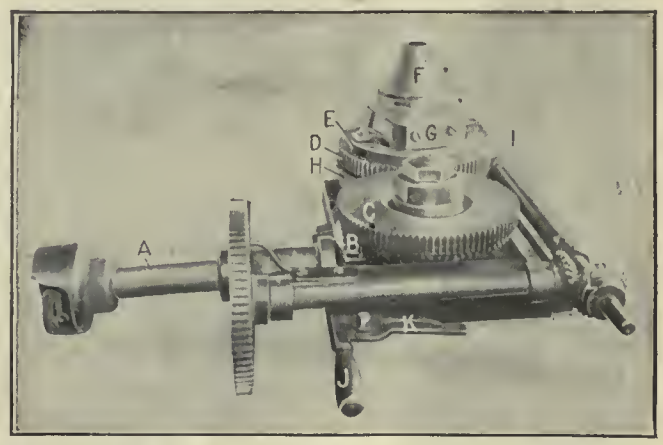

FIG. 98. RELIEVING ATTACHMENT FOR ROLL GROOVING

The operations on the fixed stud are to a large extent performed on milling machines, although there are a number in which the lathes have been arranged with special attachments and a few in which special machines altogether are used. The fixed stud also introduces the use of Pratt & Whitney profiling machines, examples of which

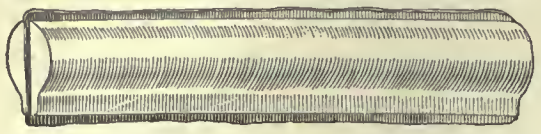

FIG. 107

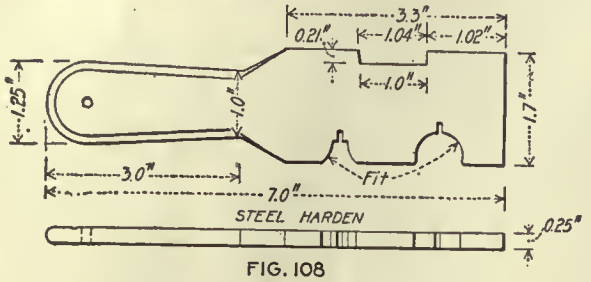

FIG. 108
OPERATION A

FIG. 109. OPERATION B

OPERATION A. FORGING FROM BAR, SIX IN A STRIP

Transformation—Fig. 107. Number of Operators—One. Description of Operation—Drop forging. Apparatus and Equipment Used—Billings & Spencer 1,000-lb. drop hammer. Gages—Fig. 108. Production—440 studs per hr.

OPERATION C. ANNEALING

Number of Operators—One. Description of Operation—Heat to 850 deg. C. (1,562 deg. F) and allow it to cool down with the furnace over night. Apparatus and Equipment Used—Cast-iron annealing boxes or pots filled with charcoal and heated in a Brown & Sharpe furnace. Gages—Pyrometer.

OPERATION C-1. PICKLING

Number of Operators—One. Description of Operation—Pickled in 1 part sulphuric acid to 9 parts water; afterward washed in water and then lime. Apparatus and Equipment Used—Wooden pickling tank.

OPERATION B. COLD TRIMMING

Transformation—Fig. 109. Machine Used—Perkins back-geared press. Number of Operators per Machine—One. Punches and Punch Holders—Single punch and cast-iron holder. Dies and Die Holders—Single trimming die and cast-iron holder. Average Life of Punches and Dies—20,000 pieces between grindings. Production—450 blanks of 6 studs each per hr. Note—Blank is pushed down through die.

OPERATION 1. STRADDLE-MILLING BOTH ENDS OF STRIPS

Transformation—Fig. 110. Machine Used—Pratt & Whitney Lincoln type miller, belt drive. Number of Operators per Machine—One. Work-Holding Devices—Work held in vise with formed jaws, Figs. 111 and 112. Tool-Holding Devices—Cutters held on standard arbor. Cutting Tools—Two 4-in. side-cutting mills, Fig. 113. Number of Cuts—Two. Cut Data—Speed, 60 r.p.m.; feed, 5/8 in. Coolant—Cutting oil put on by hand brush. Average Life of Tool Between Grindings—110 to 150 pieces. Gages—Length, Fig. 114. Production—25 per hr. per machine. Note—One man can run several machines; these pieces are handled in boxes holding 40 strips of 6 studs each.

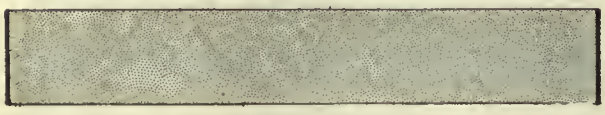

FIG. 110

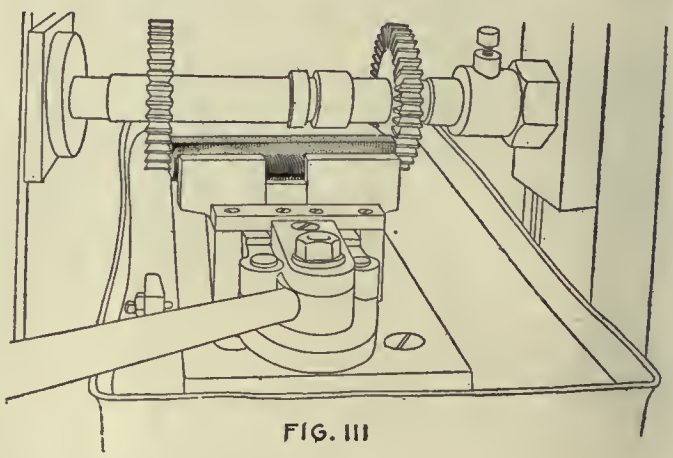

FIG. 111

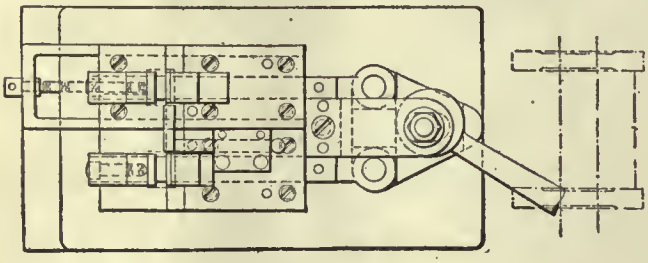

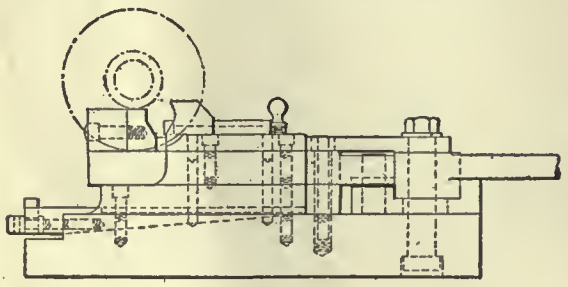

FIG. 112

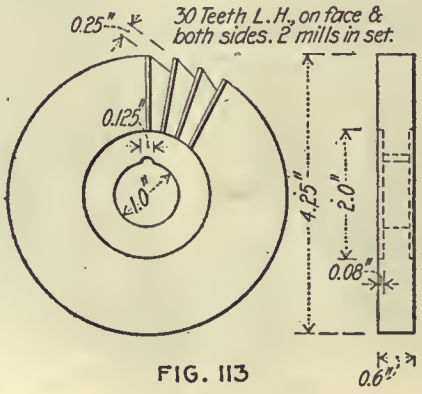

FIG. 113

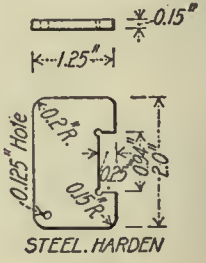

FIG. 114

will occur frequently in succeeding operations on various rifle parts.

In order to make clear the actual work performed in a profile milling operation, the operation is accompanied by a diagram which shows the relation between the profiling finger and the profiling cutter. The former is shown by means of a solid black circle while the cutter is represented by a small star. The templet is shown in connection with the profile finger and is represented as approximately having the same outline as that required in the piece. An example of this will be found in operation 12, in which the dovetail cut for the adjustable sight is profiled.

Many interesting and valuable methods are to be noted in the practice at Springfield. Some of these are well adapted to use in shops working on other lines than the production of munitions. An example of this is shown in Fig. 126, in which a small brush is arranged at the

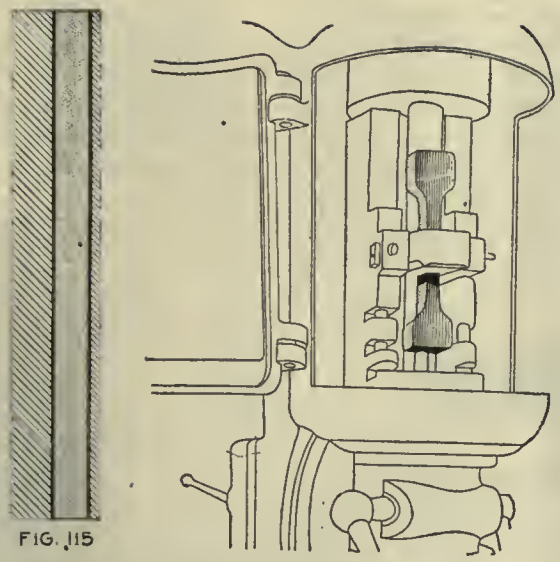

FIG. 115

FIG. 116

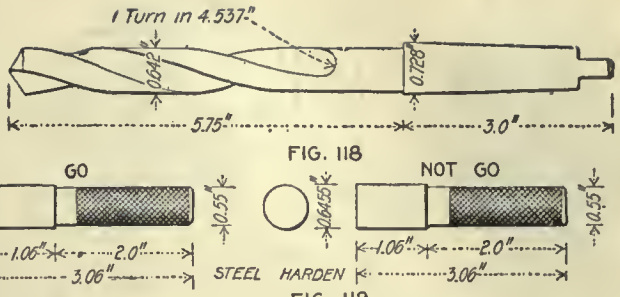

FIG. 118

FIG. 119

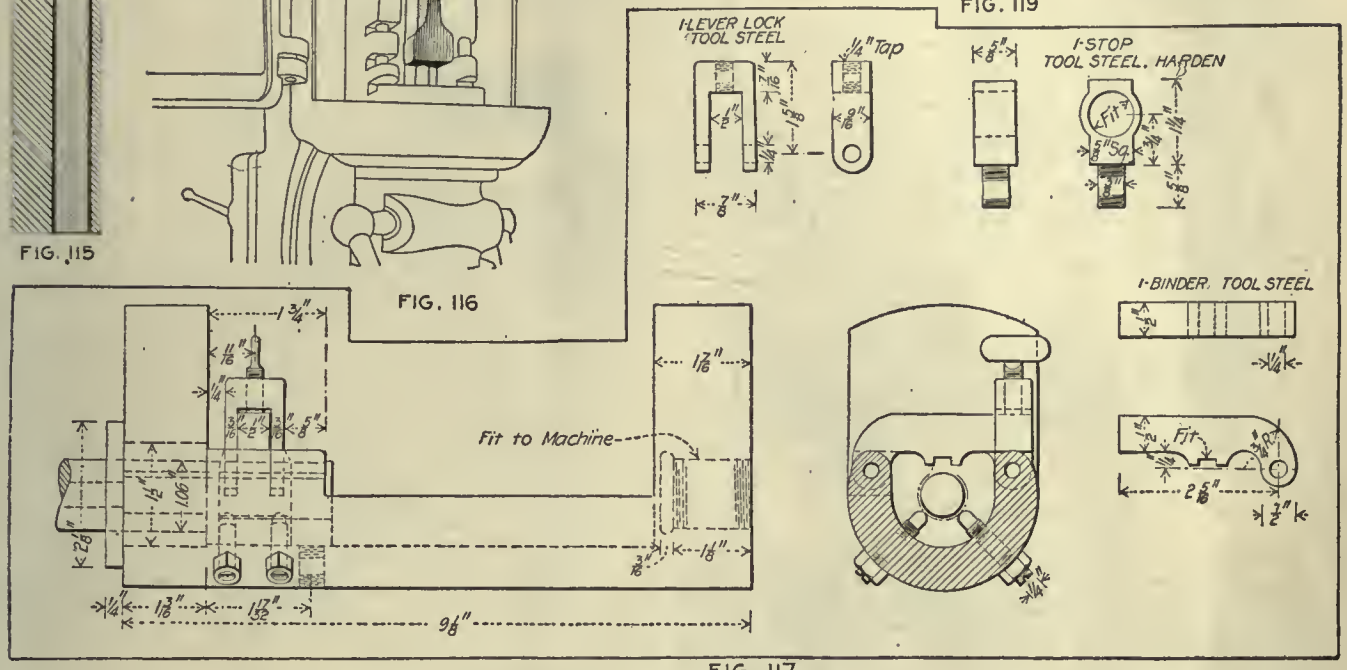

FIG. 117

OPERATION 2

OPERATION 2. DRILLING BORE OF FIXED STUD FOR BARREL

Transformation—Fig. 115. Machine Used—Pratt & Whitney automatic upright drill. Number of Machines per Operator—12. Work-Holding Devices—Work held in fixture by strap and clamp, Figs. 116 and 117. Tool-Holding Devices—Tool held in carriage of drill by setscrew. Cutting Tools—Special 0.643-in. drill, high-speed steel, Fig. 118. Number of Cuts—One. Cut Data—Speed, 600 r.p.m.; feed, $\frac{1}{16}$ in. Coolant—Cutting oil. Average Life of Tool Between Grindings—15 to 20 pieces. Gages—Fig. 119. Production—3 pieces per hr. per machine.

OPERATION 5. FORM-MILLING OUTSIDE OF FIXED STUD LENGTHWISE

Transformation—Fig. 120. Machine Used—Pratt & Whitney Lincoln type miller, belt driven. Number of Operators per Machine—One. Work-Holding Devices—Work held on pin that lines cut with bore clamped on ends, Figs. 121 and 122. Tool-Holding Devices—Cutters held on standard arbor. Cutting Tools—Two form cutters, Fig. 123. Number of Cuts—Two. Cut Data—Speed, 60 r.p.m.; feed, ½ in. Coolant—Compound; ¼-in. stream. Average Life of Tool Between Grindings—200 pieces. Gages—Snap, Fig. 124. Production—15 per hr.

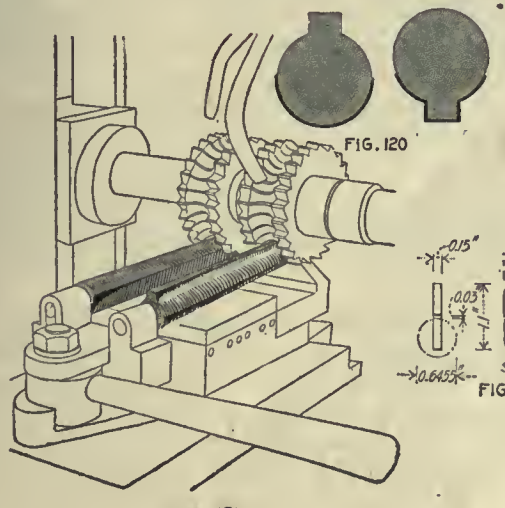

FIG. 120

FIG. 121

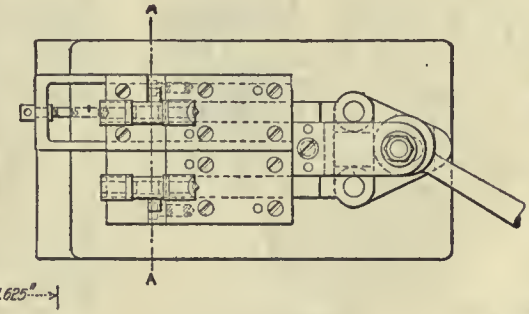

SECTION A-A

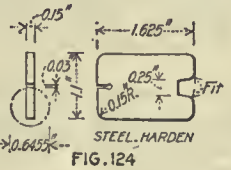

FIG. 124

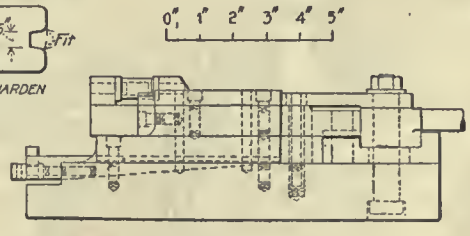

FIG. 122

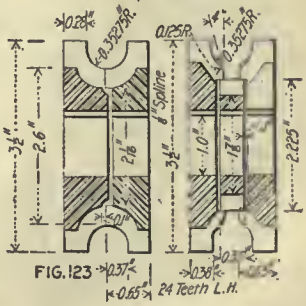

FIG. 123

OPERATION 5

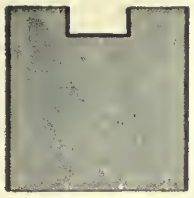

FIG. 125

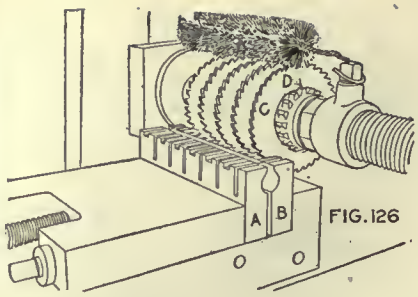

FIG. 126

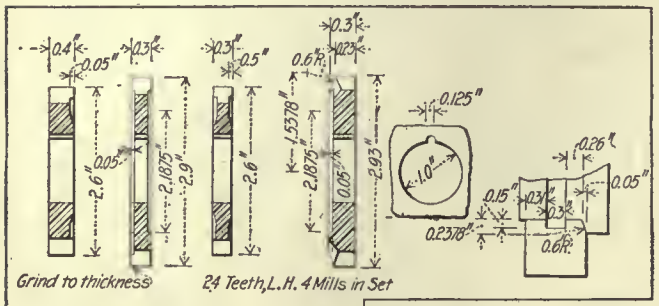

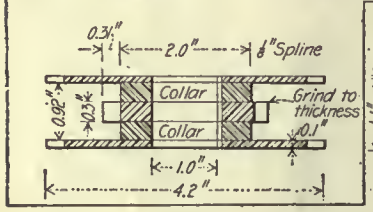

FIG. 127

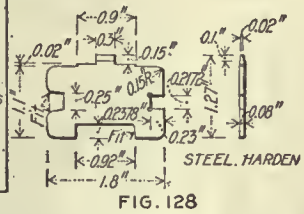

FIG. 128

OPERATION 6

OPERATION 6. MILLING TOP AND SIDE CROSSWISE

Transformation—Fig. 125. Machine Used—Pratt & Whitney Lincoln type miller, belt drive. Number of Operators per Machine—One. Work-Holding Devices—Work held in vise form jaws, Fig. 126. Tool-Holding Devices—Tools held in standard arbor, Fig. 126. Cutting Tools—Four ⅛x4-in. saws, Fig. 127; four 2½x$\frac{5}{16}$-in. slotting mills. Cut Data—Speed, 60 r.p.m.; ½-in. feed. Coolant—Cutting oil. Average Life of Tool Between Grindings—100 pieces. Special Fixtures—Standard vise, special jaws. Gages—Length and form, Fig. 128. Production—180 per hr.

top of a gang of slitting saws for the purpose of removing chips from saw-teeth.

Another simple but time-saving arrangement is shown in Fig. 130, in which the fixed studs are reamed under drilling machines. Considerable time is saved by holding the reamer stationary as far as up-and-down movements are concerned and feeding the piece by hand with the crossbar arrangement shown.

A simple hand tapping machine which will be found of considerable use in many shops is shown in Fig. 150.

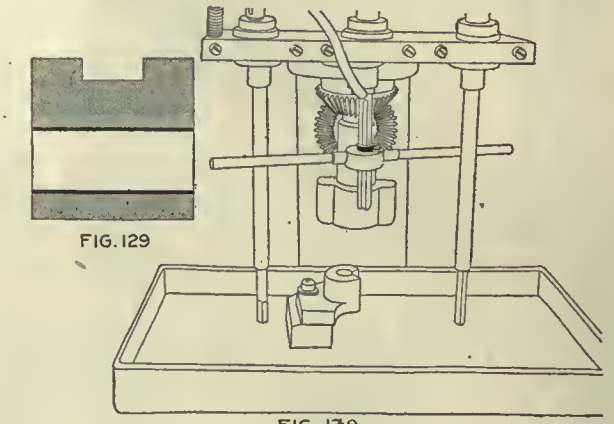

FIG. 129

FIG. 130

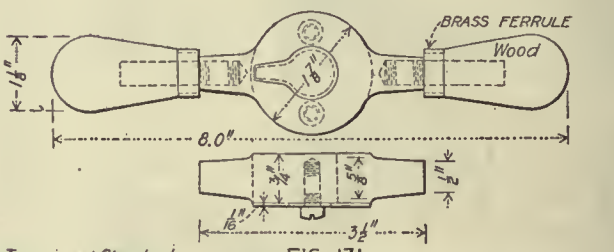

FIG. 131

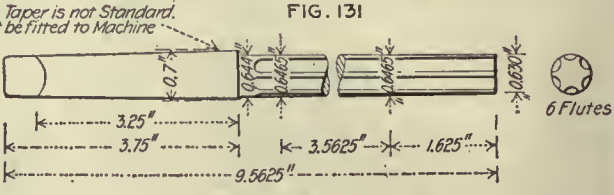

FIG. 132

OPERATION 3

OPERATION 3. REAMING BORE FOR BARREL

Transformation—Fig. 129. Machine Used—Ames Manufacturing Co. upright drilling machine. Number of Operators per Machine—One. Work-Holding Devices—Work held in holder, Fig. 131; holder held by hand. Tool-Holding Devices—Reamer held by taper shank in spindle, Fig. 130. Cutting Tools—Reamer, Fig. 132. Number of Cuts—One. Cut Data—Speed, 70 r.p.m.; hand feed. Coolant—Cutting oil; ⅛-in. stream. Average Life of Tool Between Grindings—2,000 cuts. Gages—Plug. Production—370 per hr.

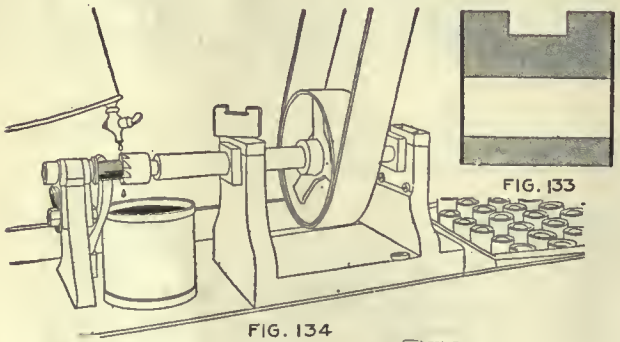

FIG. 133

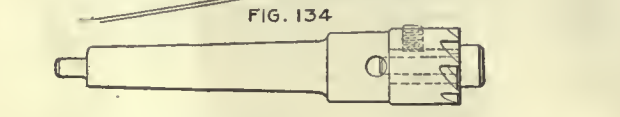

FIG. 134

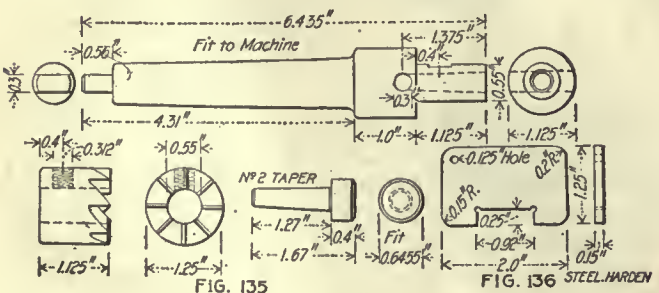

FIG. 135

FIG. 136

OPERATION 4

OPERATION 4. SQUARING ENDS TO FINISH LENGTH

Transformation—Fig. 133. Machine Used—Special machine built in shops, Fig. 134. Number of Operators per Machine—One. Work-Holding Devices—Work held on pin in tailstock of machine. Tool-Holding Devices—End mill held by taper shank. Cutting Tools—1¼-in. mill with pilot, Fig. 135. Number of Cuts—Two. Cut Data—Speed, 70 r.p.m.; hand feed. Coolant—Cutting oil; $\frac{1}{16}$-in. stream. Average Life of Tool Between Grindings—1,000 cuts. Gages—Snap, Fig. 136. Production—120 per hr.

This can be placed in a bench vise, fastened to floor, post or bench itself or held in a variety of other ways. Its range as far as variety of work is concerned will be considerably increased by means of an adjustable vise, in place of the fixture at the left-hand end, which is used for holding the stud. A close study of operations on the rifle, many of which are the result of years of evolution, will reveal a number of such useful methods worthy of adoption as time savers.

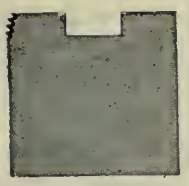

FIG. 137

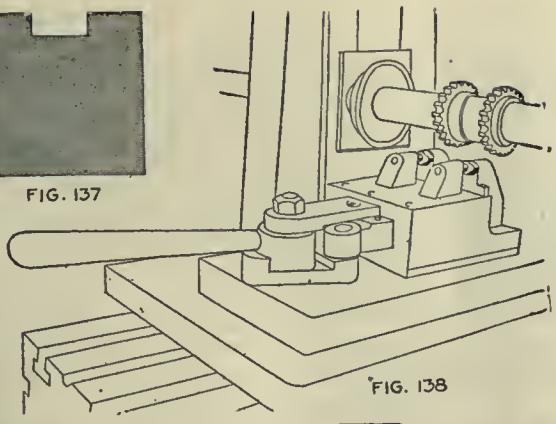

FIG. 138

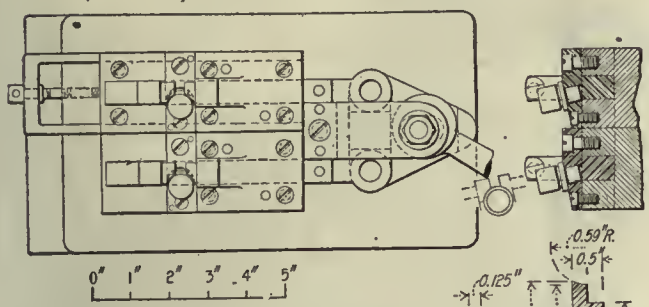

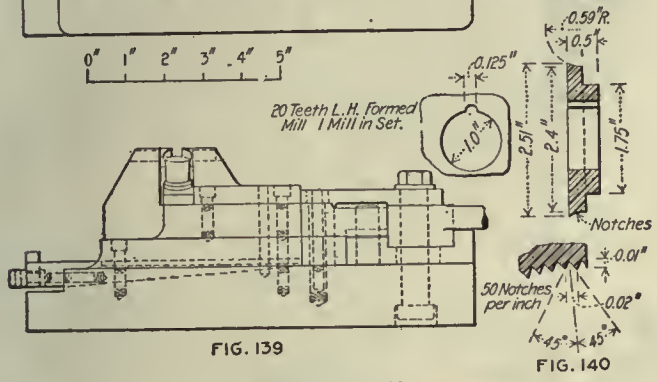

FIG. 139

FIG. 140

OPERATION 10

OPERATION 10. MILLING SERRATIONS ON REAR END OF LUG

Transformation—Fig. 137. Machine Used—Pratt & Whitney Lincoln type miller, belt drive. Number of Operators per Machine—One. Work-Holding Devices—Work held on studs set at angle with vise jaws that bind on stud, Fig. 139. Tool-Holding Devices—Cutters held on standard arbor, Fig. 138. Cutting Tools—Two 2½x⅛-in. serration cutters, Fig. 140. Number of Cuts—Two. Cut. Data—Speed, 60 r.p.m.; ½-in. feed. Coolant—Cutting oil put on by hand brush. Average Life of Tool Between Grindings—500 pieces. Gages—None. Production—50 per hr.

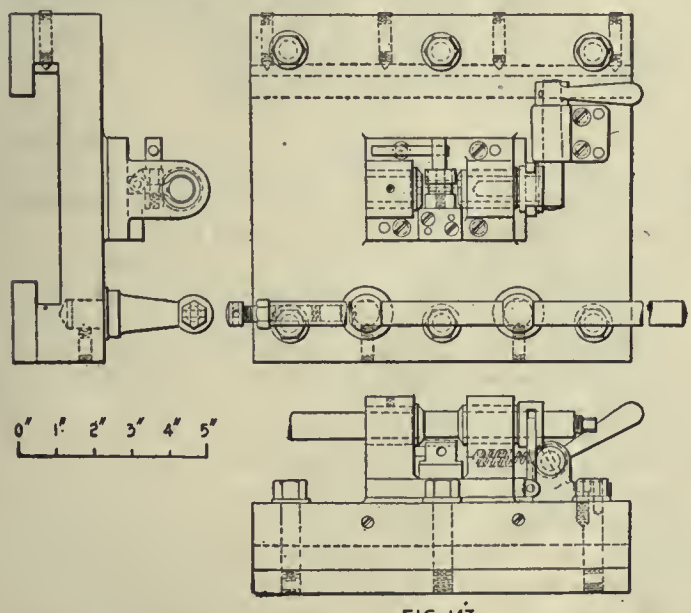

FIG. 143

OPERATION 9

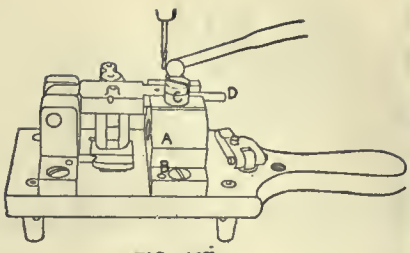

FIG. 147

FIG. 148A, OPERATION 7A

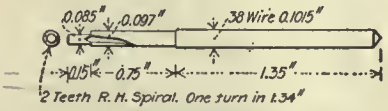

FIG. 148
OPERATION 7

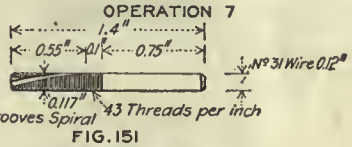

FIG. 151
OPERATION 8

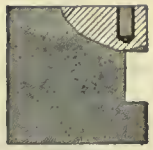

FIG. 146

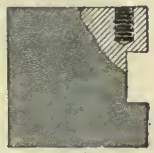

FIG. 149

FIG. 151A

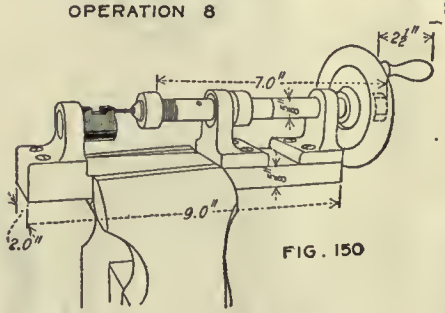

FIG. 150

The clamping devices used at the Springfield arsenal are also worthy of note. Many of them are similar in principle and are also the result of evolution and of discarding what is in use for something better, going back occasionally, however, to the original scheme.

FIG. 144

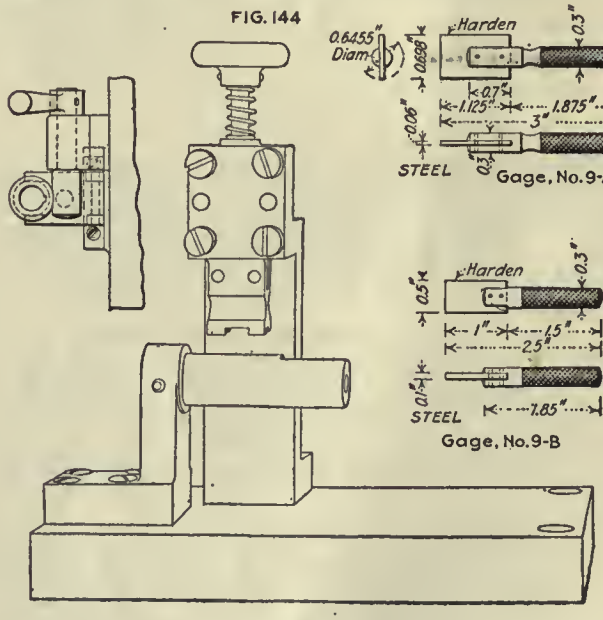

FIG. 145

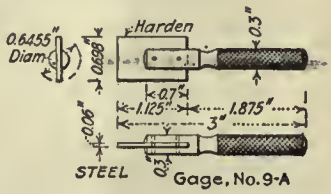

Gage, No. 9-A

Gage, No. 9-B

FIG. 152

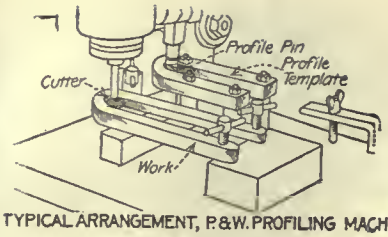

TYPICAL ARRANGEMENT, P.&W. PROFILING MACHINE

FIG. 153

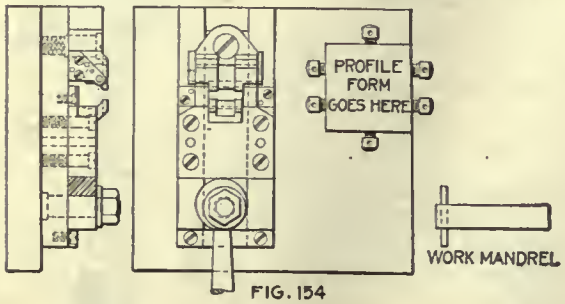

FIG. 154

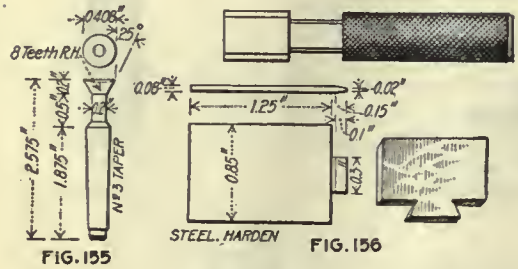

FIG. 155 FIG. 156

QPERATION 12

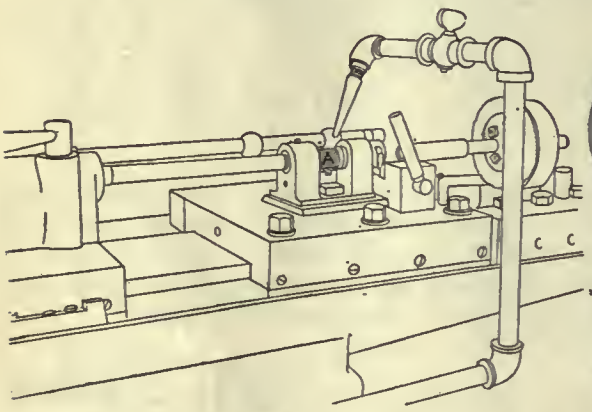

FIG. 142

FIG. 141

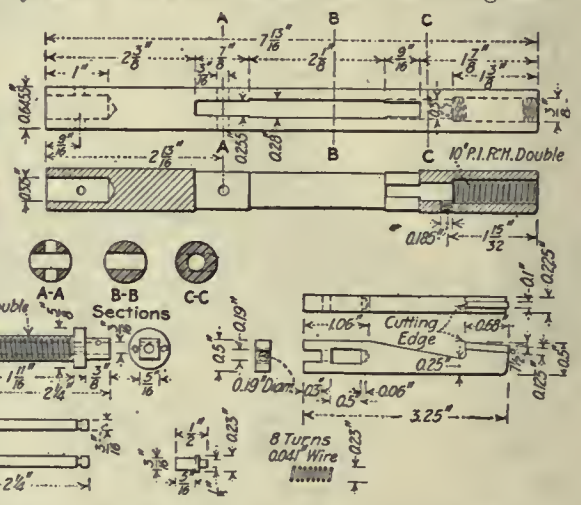

OPERATION 9. SPLINING

Transformation—Fig. 141. Machine Used—Spliner made at Hill shops. Number of Operators per Machine—One. Work-Holding Devices—Work held in fixture clamped at ends, Fig. 143. Tool-Holding Devices—Cutter at each end of machine. Cutting Tools—Using studs or guider barrel tool, Fig. 144. Number of Cuts—One. Cut Data—40 strokes per minute. Coolant—Cutting oil; ⅛-in. stream. Average Life of Tool Between Grindings—200 pieces. Gages—Fig. 145. Production—85 per hr. Note—One end of splining machine shown in Fig. 142.

OPERATION 7. DRILLING SCREW HOLES

Transformation—Fig. 146. Machine Used—Pratt & Whitney three-spindle 16-in. drilling machine. Number of Operators per Machine—One. Work-Holding Devices—Work held in drill jigs, Fig. 147. Tool-Holding Devices—Tools, drill and reamer, held in Almond chuck. Cutting Tools—0.92-in. drill and 0.97-in. reamer, Fig. 148. Number of Cuts—Two. Cut Data—Speed, 150 r.p.m.; hand feed. Coolant—Cutting oil; ⅛-in. stream. Average Life of Tool Between Grindings—50 pieces. Gages—Locating, Fig. 148-A, No. 7. Production—62 per hr.

OPERATION 8. TAPPING SCREW HOLES

Transformation—Fig. 149. Machine Used—Hand-operated tapping machine, Fig. 150. Number of Operators per Machine—One. Work-Holding Devices—Work held on stud with pin for stop; stop held in little pivot chuck. Tool-Holding Devices—Tapping fixture held in vise at bench. Cutting Tools—0.117-in. tap, 43 threads per inch, Fig. 151. Number of Cuts—One. Coolant—Cutting oil put on with brush. Gages—Fig. 151-A. Production—150 per hr.

OPERATION 12½. FILING AND CORNERING OPERATIONS 8, 9 AND 10

Number of Operators—One. Description of Operation—Filing burrs off and touching up. Apparatus and Equipment Used—File and scraper. Production—150 per hr.

OPERATION 12. PROFILING DOVETAIL CUT AND TOP OF LUG TO FINISH

Transformation—Fig. 152. Machine Used—Pratt & Whitney belt-drive profiler. Number of Operators per Machine—One. Work-Holding Devices—Work held in vise fixture with special jaws, Fig. 154. Tool-Holding Devices—Tool or cutters driven by taper shank in spindle of machine. Cutting Tools—Angle cutter, Fig. 155. Number of Cuts—One, Fig. 153. Cut Data—Speed, 270 r.p.m.; hand feed. Coolant—Cutting oil. Average Life of Tool Between Grindings—400 pieces. Gages—Plug, Fig. 156. Production—40 per hr.

OPERATION 13. BURRING SCREW HOLE AND FILING TO FINISH

Number of Operators—One. Description of Operation—Burring the burr on screw hole. Apparatus and Equipment Used—File and scraper. Production—90 per hr.

OPERATION 14. POLISHING

Number of Operators—One. Description of Operation—Rounding corners and brushing up; finishing all over. Apparatus and Equipment Used—Small-diameter polishing drill; cloth wheel. Production—35 per hr.

Quenching Mediums

Water, heavy oil, a mixture of oil and water and many special brands of quenching oils are advocated and used as quenching mediums. Water has the advantage of conferring excellent physical properties by reason of the rapid cooling, but for the same reason will produce dangerous shrinkage strains unless the cooling is very carefully timed. Heavy oil, such as cylinder oil, greatly reduces the danger from cracking, but quenches more slowly and therefore does not produce such good physical properties in the steel. With a view to reducing the danger of damage by water and at the same time to securing better results than can be obtained with heavy oil, various other quenching fluids are used. Some manufacturers use a mixture of oil and water similar to a drilling compound, while others use light oils of different grades.

The writer advocates the use of an inexpensive light mineral oil with a fire point of about 390 deg. F., a flash point of about 350 deg. F. and gravity about 29 deg. Bé. There should be separate quenching and storage tanks, the latter to have ample capacity and to be provided with cooling coils. The oil should be pumped from the storage into the quenching tank and delivered into the latter in such a way as to produce a vigorous and positive circulation about the object to be quenched. A system of this kind has many advantages, one of the most important being that since the circulation of the oil is controlled by the pump, the rate of circulation can be varied, and the rate of cooling thus adapted to suit the needs of almost any case.—L. H. Fry in *Railway Mechanical Engineer.*

The Fixed Base and Final Barrel Operations

The fixed base, or that part of the rifle which surrounds the barrel at the rear end and becomes the base for the rear sight, is quite an expensive piece to manufacture. It must be a good fit on the barrel and is finally pinned into position to insure its permanent location.

This base must supply the pivot or stud on which the movable base of the rear sight swings, this involving a hollow milling operation as shown in Fig. 189. Then the ends must be undercut to guide and hold the ends of the movable base, which is done on a profiler, Fig. 199.

The fixed base, details of which are shown in Fig. 157, is a drop forging of Class D steel, the stock being supplied in round bars of 1.4 in. These are forged singly and also machined singly with a few notable exceptions, in which some fixtures are made double for holding two bases at one setting. As with the fixed stud, the hole is bored and reamed, and nicely fitting mandrels are used

OPERATION A. FORGING FROM BAR AND HOT-TRIMMING

Transformation—Fig. 158. Number of Operators—One. Description of Operation—Forging from bar. Apparatus and Equipment Used—1,000-lb. Billings & Spencer drop hammer. Gages—Fig. 159. Production—80 per hr.

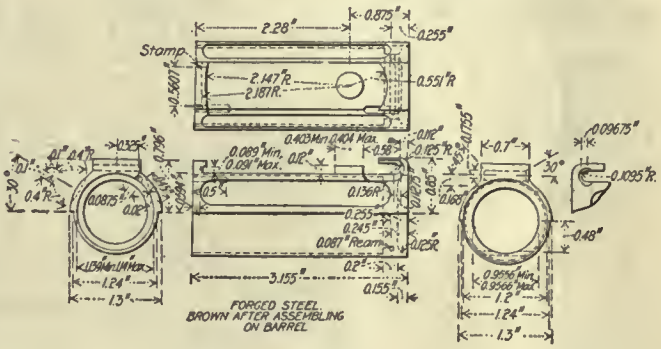

FIG. 157. DETAILS AND WORKING LIMITS OF THE FIXED BASE

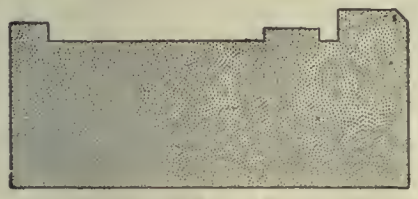

FIG.158 OP.A

FIG.159

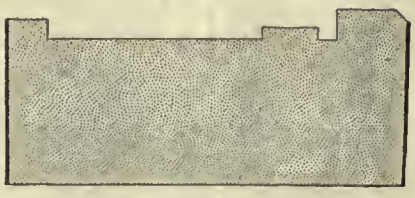

FIG.160

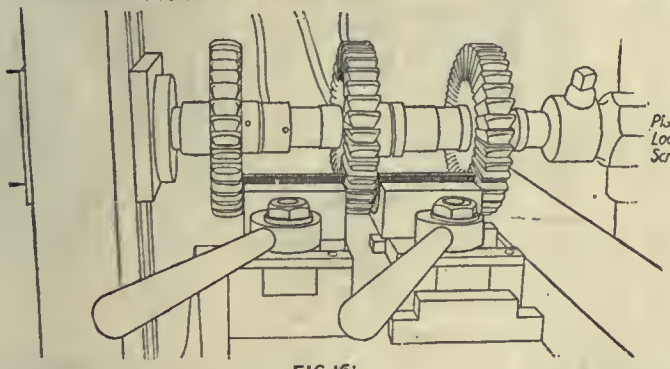

FIG.161

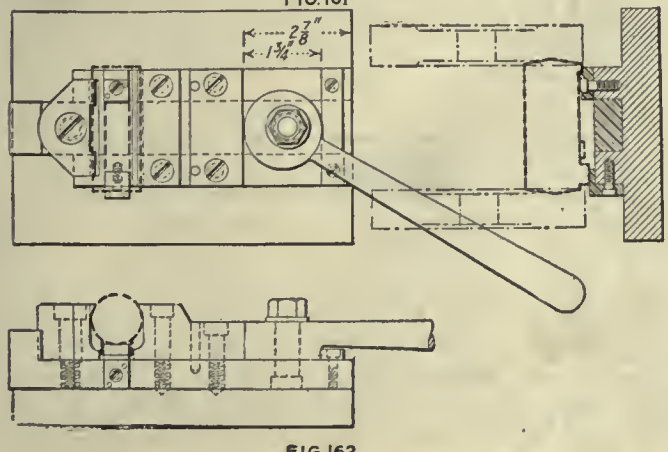

FIG.162

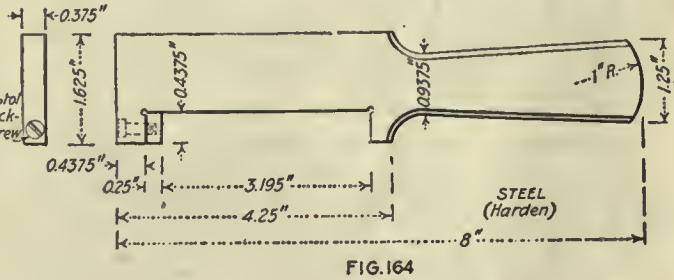

FIG.164

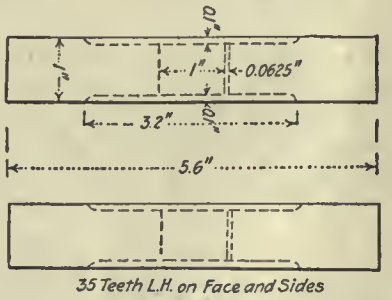

35 Teeth L.H. on Face and Sides

FIG.163

OPERATION 1. STRADDLE-MILLING BOTH ENDS

Transformation—Fig. 160. Machine Used—Pratt & Whitney Lincoln type belt-drive mill, Fig. 161. Number of Machines per Operator—Two. Work-Holding Devices—Work held in grooved-jaw vise, Figs. 161 and 162. Tool-Holding Devices—Cutters held on standard arbor, Fig. 161. Cutting Tools—6-in. facing mills, Fig. 163. Number of Cuts—Two. Cut Data—Feed, ¾ in. per min.; speed, 60 r.p.m. Coolant—Cutting oil put on with brush. Average Life of Tool Between Grindings—500 pieces. Gages—Length, Fig. 164. Production—200 per day. Note—Fixed bases are handled in boxes that hold 50 each.

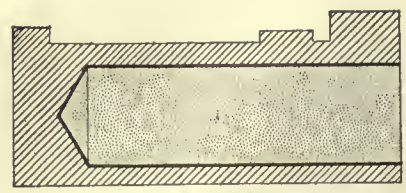

FIG. 165

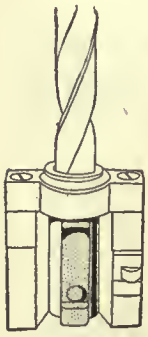

FIG. 166

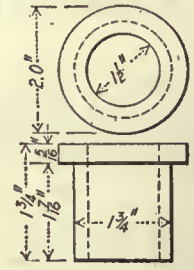

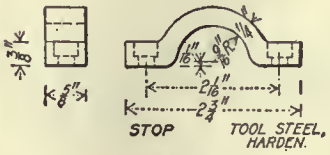

STOP TOOL STEEL, HARDEN.

FIG. 167

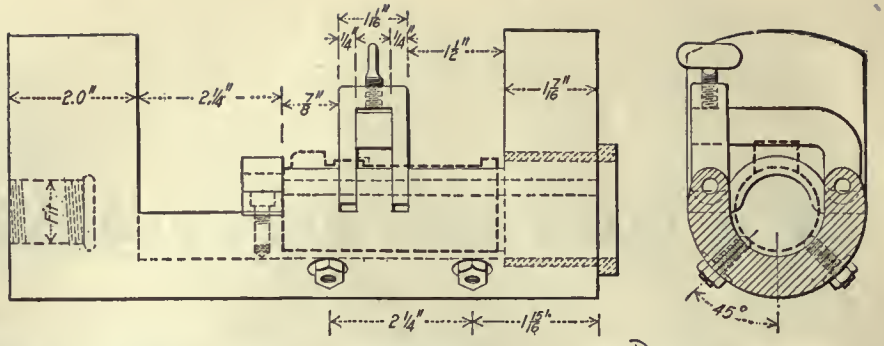

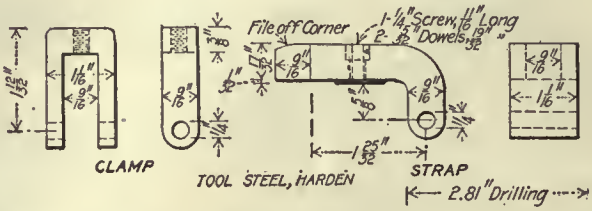

CLAMP TOOL STEEL, HARDEN STRAP

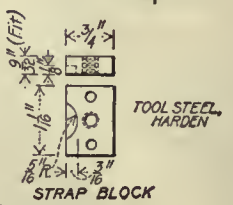

TOOL STEEL, HARDEN STRAP BLOCK

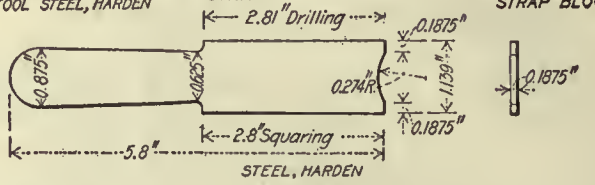

STEEL, HARDEN

FIG. 168

OPERATION 2

for locating and supporting the work in many of the milling operations. The sequence of operations follows:

A. Forging from bar and hot-trimming
1. Straddle-milling both ends
2. Drilling large end of bore
5. Drilling small end of bore
8. Squaring front end
6. Reaming bore and squaring end of base
9. Milling both sides lengthwise
9½. Burring and filing to finish width
10. Milling entire top surface of base crosswise
10½. Burring operation 10
12. Hollow-milling pivot stud
12½. Burring operation 12
13. Graduating zero windage points
14. Profiling rear lug for seat of rear end of movable base
15. Shaving for windage screw
15½. Burring operation 15
16. Milling outside of walls of base
19. Squaring and counterboring front end of base for hand-guard tenon
20. Shaving upper and undercut circles on rear lug
21. Filing movable base seat
22. Polishing and cornering
25. Milling bevel seats for windage screw

OPERATION 2. DRILLING LARGE END OF BORE

Transformation—Fig. 165. Machine Used—Barnes Manufacturing Co. 20-in. gang drill. Number of Machines per Operator—Four. Work-Holding Devices—Work held in upright stand fixture, Figs. 166 and 167. Tool-Holding Devices—Taper collet. Cutting Tools—High-speed twist drill. Number of Cuts—One. Cut Data—Speed, 180 r.p.m.; feed, ⅜ in. per min. Coolant—Compound; ¼-in. stream. Average Life of Tool Between Grindings—20 to 30 pieces. Gages—Depth, Fig. 168. Production—70 per hr.

OPERATION 5. DRILLING SMALL END OF BORE

Transformation—Fig. 169. Machine Used—Pratt & Whitney upright drilling machine. Number of Operators per Machine—One. Work-Holding Devices—Work set into plate using lug for stop, Fig. 170. Tool-Holding Devices—Drill on taper shank. Cutting Tools—High-speed drill, for 0.956-in. hole. Cut Data—Speed, 160 r.p.m.; ⅜-in. feed. Coolant—Cutting oil; ¼-in. stream. Average Life of Tool Between Grindings—50 pieces. Gages—Plug, Fig. 171. Production—25 per hr.

OPERATIONS 6 AND 8. REAMING AND SQUARING

Transformation—Fig. 172. Machine Used—Pratt & Whitney upright drilling machine. Number of Operators per Machine—One. Work-Holding Devices—Work held in holder; this goes in fixture, Fig. 173. Tool-Holding Devices—Taper-shank socket. Cutting Tools—Step reamer for both diameters; facing cutter on reamer, Fig. 174. Cut Data—Speed, 160 r.p.m.; feed, about 1½ in. per min. Coolant—Cutting oil; ¼-in. stream. Average Life of Tool Between Grindings—About 10 pieces. Gages—Plug and length, Fig. 175. Production—25 per hr.

OPERATION 9. MILLING BOTH SIDES LENGTHWISE

Transformation—Fig. 176. Machine Used—Pratt & Whitney Lincoln type belt-drive miller. Number of Machines per Operator—Two. Work-Holding Devices—Work held in fixture mandrels fitting holes in bore and clamping at ends. Figs. 177 and 178. Tool-Holding Devices—Cutters held on standard arbor. Cutting Tools—Two sets of forming cutters, Fig. 179. Number of Cuts—Two. Cut Data—Speed, 60 r.p.m.; feed, ⅝ in. per min. Coolant—Compound. Average Life of Tool Between Grindings—1,000 pieces. Gages—Thickness of barrel, location of shoulders, length and contour, Fig. 180; gage 180-A indicates location of shoulder and lugs on top of base and also shows contour of outside of base; 180-B gages the bevel beside the lugs and above lightening cuts. Production—25 per hr.

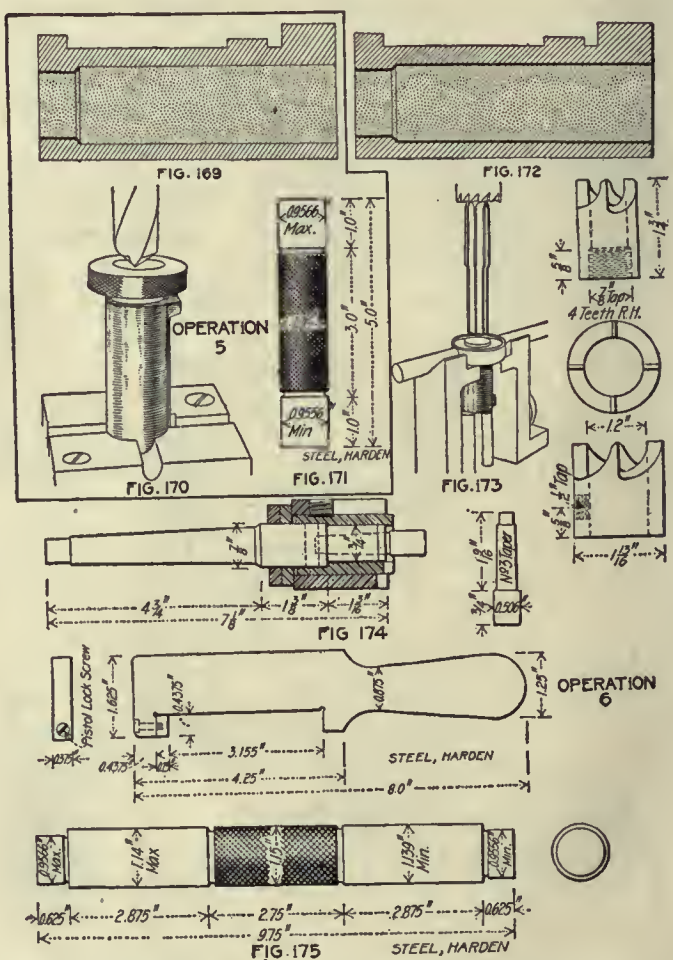

FIG. 169 FIG. 172 OPERATION 5 FIG. 170 FIG. 171 FIG. 173 FIG. 174 OPERATION 6 STEEL, HARDEN FIG. 175 STEEL, HARDEN

The operation of browning the rifle barrels is of considerable interest, inasmuch as the subject has never been fully described and the mixing of the solution has been considered more or less of a mystery. This operation is known as No. 47 and will be described now, although actually a final operation.

The barrels come to the browning department packed in boxes of 40 each. They are held from touching each other by suitable separators, the boxes holding five layers of eight barrels each, as shown in Fig. 240.

The first operation after removal from these boxes is to coat the inside of the barrel with a mineral lubricant known as "Cosmoline," which is applied with a brush. This coating prevents any rusting action by the browning solution, should any of it leak past the plugs that are driven into each end of the barrel.

These plugs are made of soft white pine and should be free from pitch or resin. They are turned with the device shown in Fig. 243, and to insure the absence of pitch they are placed in wire baskets and submerged in boiling water for about 10 min. The pitch is boiled out and then carefully skimmed from the top of the water in the tank, shown at *A*, Fig. 241. Should any pitch remain in the plug and exude on any part of the barrel, it prevents the browning solution from acting at that point. After the plugs are firmly dried, they are driven into the barrel so as to prevent either the water or the browning solution from coming in contact with the bore. The barrels are boiled from 10 to 15 min. and then placed in tanks of lime water, as in Fig. 241. This treatment removes all traces of grease and leaves the barrels clean for the action of the browning solution. As soon as the barrels are cool enough to be handled, the lime is brushed and wiped off, the barrels being held by the plugs, to avoid contact with the hands.

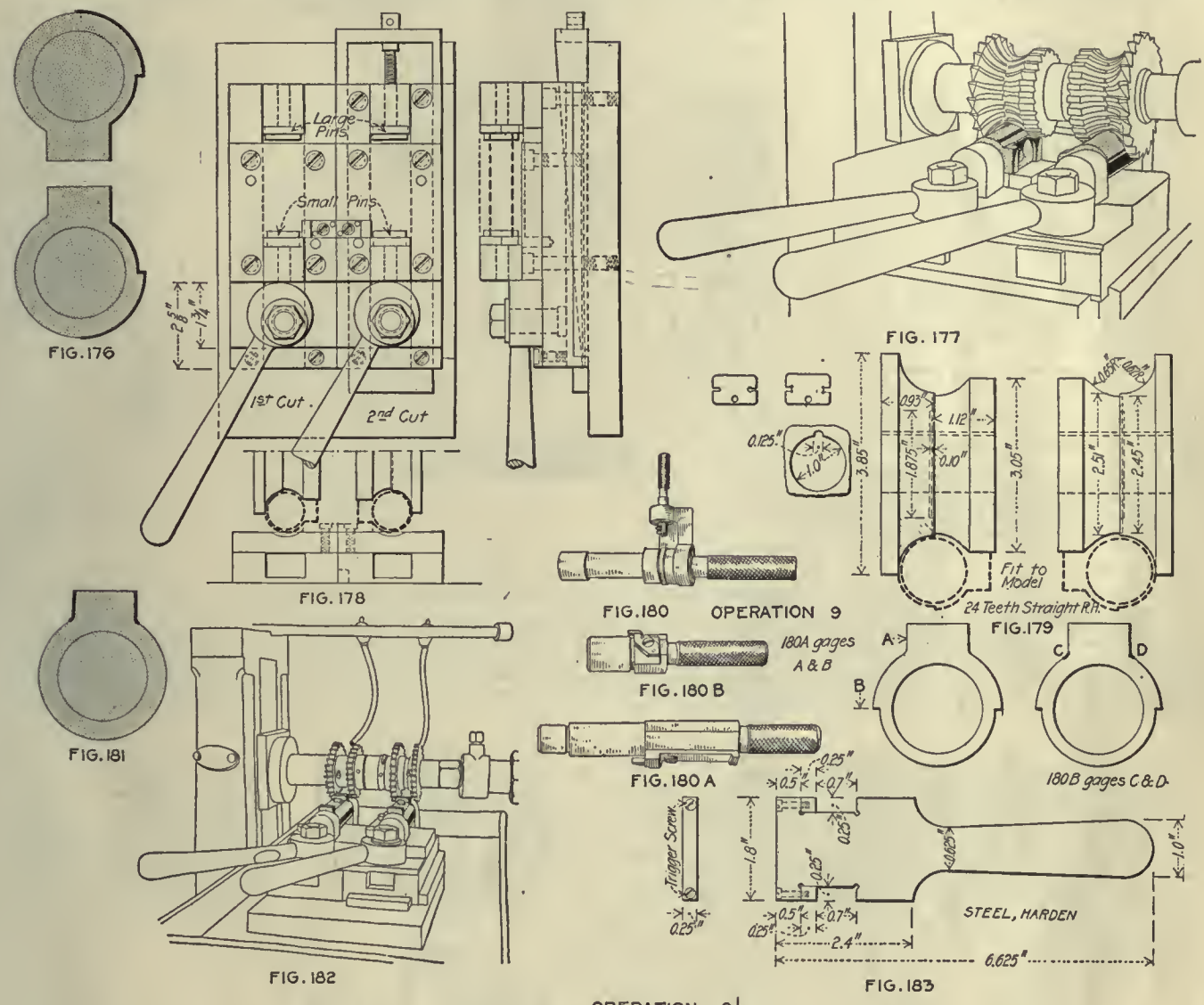

OPERATION 9½. MILLING TO FINISH WIDTH

Transformation—Fig. 181. Machine Used—Pratt & Whitney Lincoln type miller, belt drive. Number of Operators per Machine—One. Work-Holding Devices—Work held in vise clamping on ends, Fig. 182. Tool-Holding Devices—Standard arbor. Cutting Tools—Two sets of side-milling cutters, 3 in. in diameter. Number of Cuts—Two. Cut Data—Feed, 1 in.; speed, 70 r.p.m. Coolant—Compound; ¼-in. stream. Average Life of Tool Between Grindings—1,000 pieces. Gages—Width, Fig. 183. Production—25 per hr.

Browning Solution

Before making up the browning solution proper, it is necessary to prepare what is known as a tincture of steel, which forms an important ingredient of the browning solution. To make the tincture of steel, put 3 lb. of carbonate of iron in a stone jar and add 3 qt. of muriatic

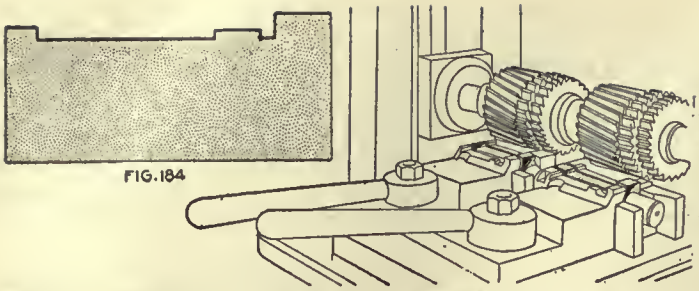

FIG. 184

FIG. 185

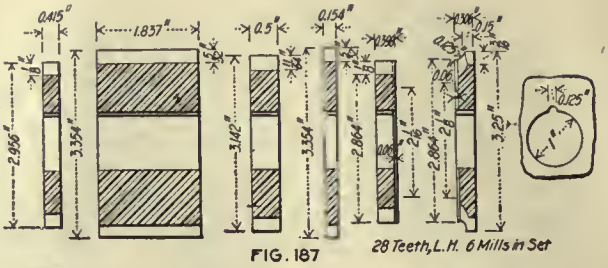

FIG. 187

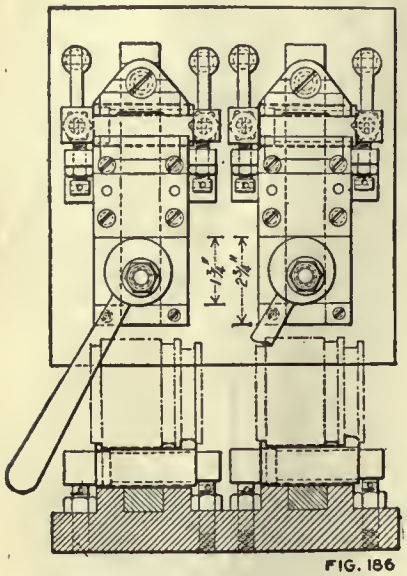

FIG. 186

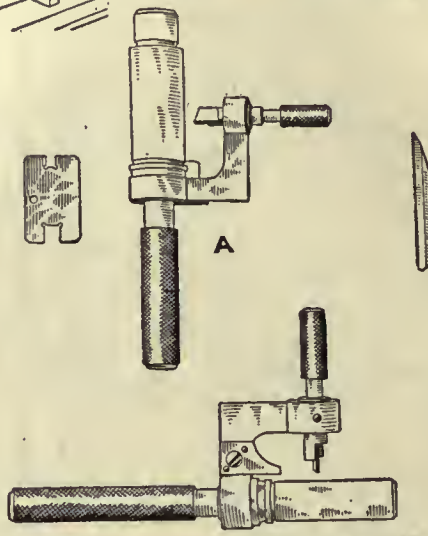

FIG. 188

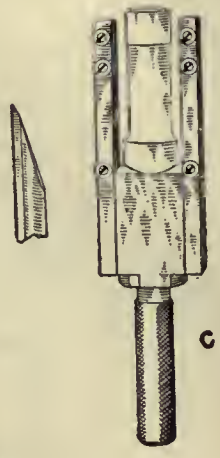

OPERATION 10

OPERATION 10. MILLING ENTIRE TOP SURFACE OF BASE CROSSWISE

Transformation—Fig. 184. Machine Used—Pratt & Whitney Lincoln type belt-drive miller. Number of Machines per Operator—Two. Work-Holding Devices—Work held on arbors in jaws of vise, Figs. 185 and 186; mandrel A is forced against the adjustable stops B by the finger C; see Fig. 186. for details. Tool-Holding Devices—Cutters held on standard arbor. Cutting Tools—Two sets of forming cutters; one shown in Fig. 187. Number of Cuts—Two. Cut Data—Speed, 60 r.p.m.; feed, ⅝ in. Coolant—Cutting oil applied with hand brush. Average Life of Tool Between Grindings—1,000 pieces. Gages—Fig. 188; A, front and rear guides; B, height of seat; C, height of seat at three points measured by straight-edge across the buttons shown. Production—25 per hr.

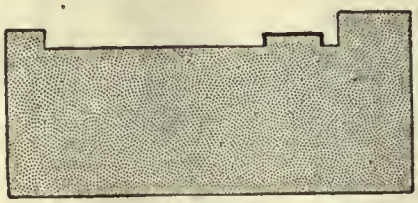

FIG. 189

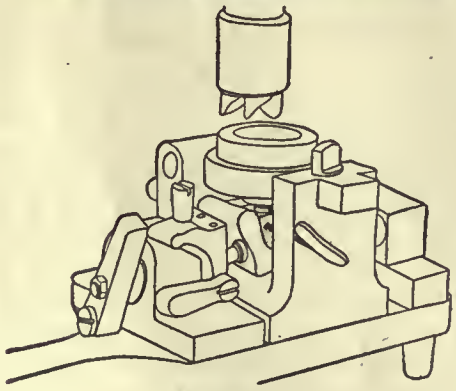

FIG. 190

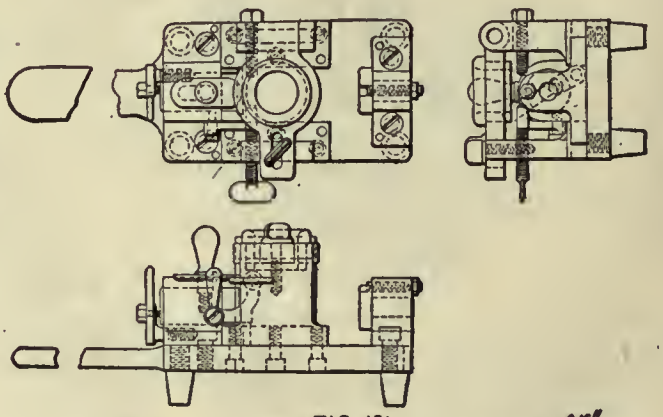

FIG. 191

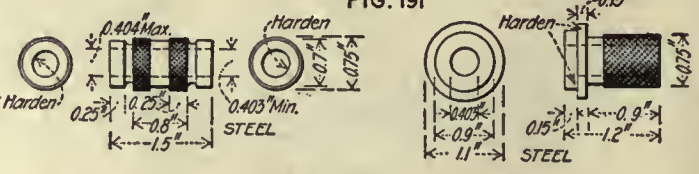

FIG. 192

OPERATION 12

OPERATION 10½. BURRING OPERATION 10

Number of Operators—One. Description of Operation—Filing burrs off side after operation 10. Apparatus and Equipment Used—File and scraper. Gages—None. Production—About 150 per hr.

OPERATION 12. HOLLOW-MILLING PIVOT STUD

Transformation—Fig. 189. Machine Used—Pratt & Whitney four-spindle upright drilling machine. Number of Operators per Machine—One. Work-Holding Devices—Work held in jig, Figs. 190 and 191. Tool-Holding Devices—Taper shank in spindle of machine. Cutting Tools—Hollow mill. Number of Cuts—Two. Cut Data—Speed, 70 r.p.m.; hand feed. Coolant—Cutting oil. Average Life of Tool Between Grindings—About 500 pieces. Gages—Ring, Fig. 192, for diameter and location. Production—35 per hr.

OPERATION 12½. BURRING OPERATION 12

Number of Operators—One. Description of Operation—Filing burrs off stud. Apparatus and Equipment Used—File or scraper. Gages—None. Production—About 300 per hr.

acid. Let this mixture stand (stirring it occasionally) until the acid "cuts," or takes up, all of the iron that it will. After the muriatic acid becomes saturated with the carbonate of iron, pour the acid off carefully into a glass demijohn, being careful that none of the remaining sediment goes with it. Add 9 qt. of grain alcohol. This completes the tincture of steel.

For making the browning solution proper, take 6 oz. of this tincture of steel, 6 oz. sweet spirits of niter, 1 oz. nitric acid, ½ oz. sulphate of copper, 1 oz. corrosive sublimate, 2 qt. soft water. Mix them in a glass-stoppered bottle, to prevent evaporation. Let the solution stand for 24 hr., if possible, although it can be used immediately, but does not give as good results.

The browning solution is applied with a sponge, as previously mentioned. This method is found much more satisfactory than the dipping process. After the barrel is entirely covered, it is placed in a rack, Fig. 242. When the rack is full, it is rolled into a steaming cabinet at the end of the browning room. Here it is subjected to a steam bath for about 1 hr. The length of time depends largely upon the condition of the atmosphere, as in humid weather a much shorter exposure is required. This steam bath forms a coating of red oxide, or rust, all over the barrel, which should not remain too long in the steam cabinet, or a surplus coat of oxide will be formed and have to be brushed off.

When the barrels are properly rusted, they are boiled in clear hot water for about 5 min. in the tank, Fig. 241. This "sets" the rust and turns the barrels a dull black. They are next brushed with fine wire, or "card," wheels to get a smooth surface. The brushing also polishes the barrels and prepares them for the next coating of the browning solution. These operations are repeated until the barrel has been through the process three times. When the barrel is finally brushed and polished, it has a fine surface and a coating that will stand considerable wear. The plugs are then pulled out from each end, and the barrel is oiled on the outside, completing the work on the barrel until it is brought out for assembling.

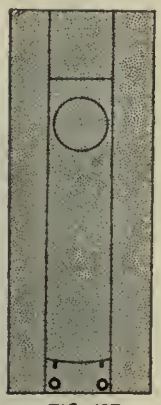

FIG. 193

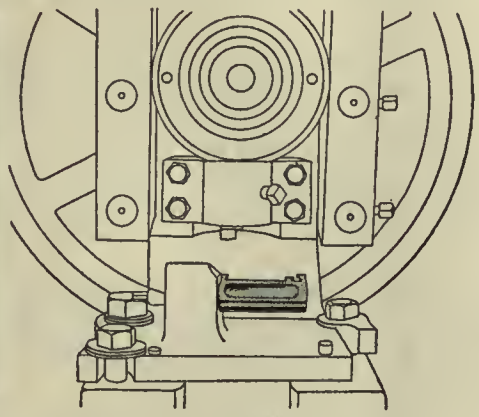

FIG. 194

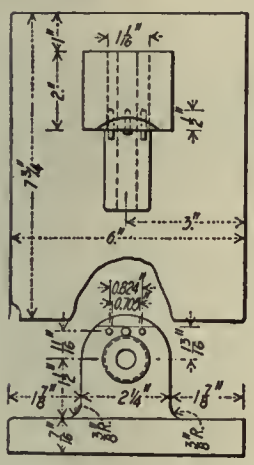

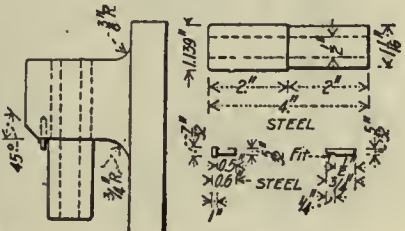

FIG. 195

FIG. 196

OPERATION 13

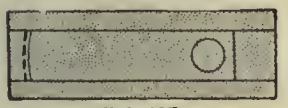

FIG. 197

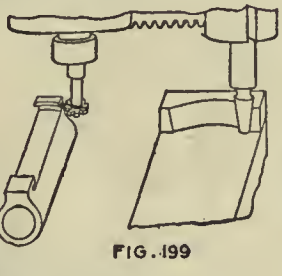

FIG. 199

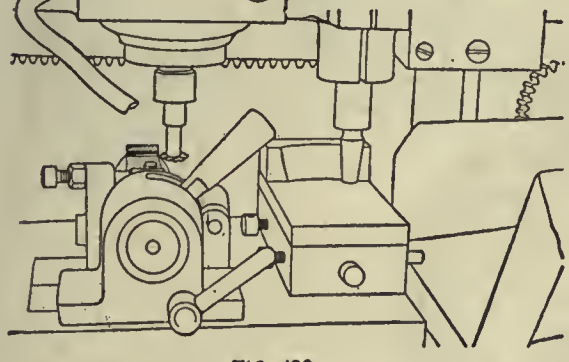

FIG. 198

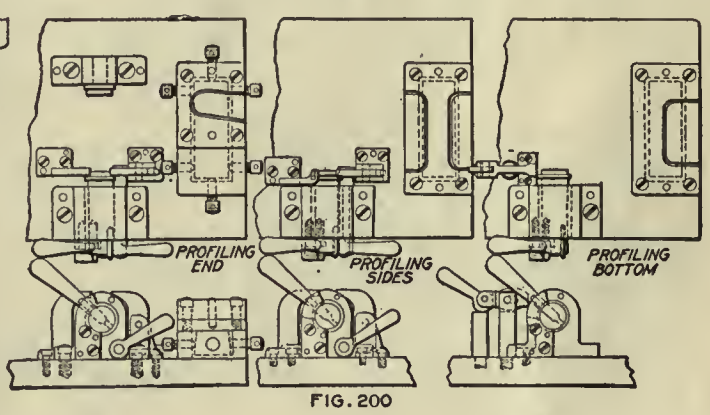

FIG. 200

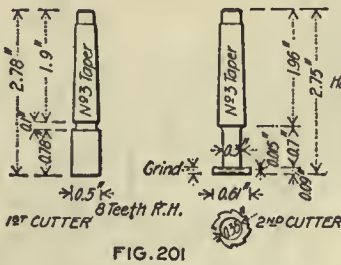

FIG. 201

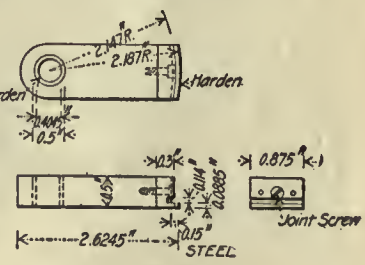

FIG. 202

OPERATION 13. GRADUATING ZERO WINDAGE POINTS

Transformation—Fig. 193. Machine Used—Snow, Brooks & Co. trimming press. Number of Operators per Machine—One. Punches and Punch Holders—Stamping punch, round shank. Work Holders—Cast-iron fixture with lug, pin and stock to hold base and locate face for stamping, Figs. 194 and 195. Average Life of Punches and Dies—75,000 pieces. Lubricant—None. Gages—Fig. 196. Production—350 per hr.

OPERATION 14. PROFILING REAR LUG FOR SEAT OF REAR END OF MOVABLE BASE

Transformation—Fig. 197. Machine Used—Pratt & Whitney profiler. Number of Operators per Machine—One. Work-Holding Devices—Clamping fixture, Figs. 198 and 200, using mandrel; machining diagram, Fig. 199. Tool-Holding Devices—Taper shank. Cutting Tools—One ¾-in. slitting cutter; one side and bottom mill, high-speed steel, Fig. 201. Cut Data—

Speed, 900 r.p.m.; hand feed. Coolant—Compound; two ¼-in. streams. Average Life of Tool Between Grindings—About 150 to 200 pieces. Gages—Fig. 202, also used in operation 20. Production—50 per hr.

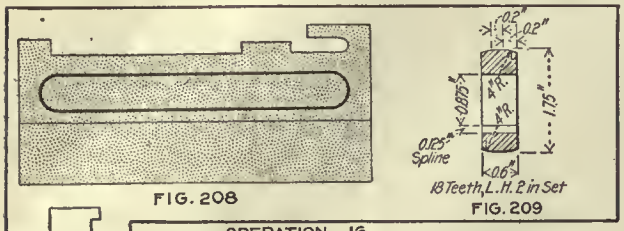

FIG. 208 FIG. 209

OPERATION 16

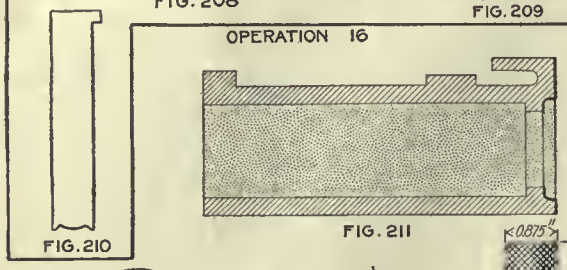
FIG. 210 FIG. 211

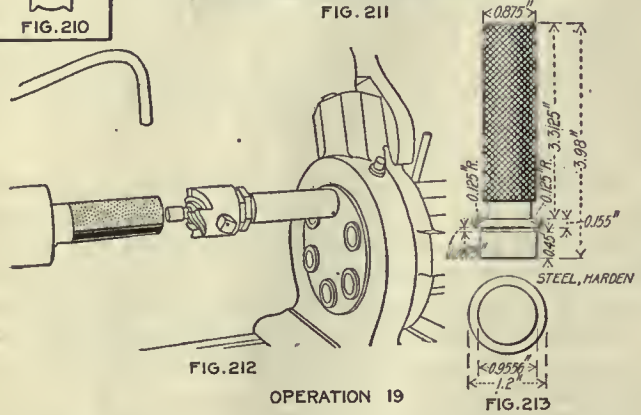

FIG. 212

OPERATION 19 FIG. 213

At the muzzle end where the plugs swell out around the bore, a ring of bright metal will appear. This is treated by brushing a coating of copperas, or blue vitriol, over the bright ring and following with a coating of sulphide of ammonia. This treatment oxidizes the copper and turns it to approximately the same color as that left by the browning solution. The end of the muzzle is thus left all black, preventing the reflection of light, which is so dangerous in modern warfare.

The operations on the fixed base may be said to act as an introduction to the operations performed on the receiver, which will be described in ensuing articles. While there is no comparison in complexity of operations between these two parts, they are handled in a similar way largely by milling, drilling and shaving operations. Profile milling does not enter widely into the manufacture of the fixed base, whereas profile operations are frequent upon the receiver. Both of these parts originate as drop forgings, and the work done upon each is such as to leave a mere shell of metal when finished.

OPERATION 15. SHAVING FOR WINDAGE SCREW

Transformation—Fig. 203. Machine Used—Bement & Miles Co. crank press. Number of Operators per Machine—One. Punches and Punch Holders—Special punch, Fig. 206. Work Holders—Special fixture, Figs. 204 and 205. Average Life of Punches and Dies—60 pieces for each grinding. Lubricant—Cutting oil; ⅛-in. stream. Gages—Width and length, Fig. 207. Production—60 per hr.

OPERATION 15½. BURRING OPERATION 15

Number of Operators—One. Description of Operation—Removing burrs from bottom of cut, operation 15. Apparatus and Equipment Used—File and scraper. Gages—None. Production—300 per hr.

OPERATION 16. MILLING OUTSIDE OF WALLS OF BASE

Transformation—Fig. 208. Machine Used—Pratt & Whitney Lincoln type belt-drive miller. Number of Operators per Machine—Two. Work-Holding Devices—Work held in vise fixture similar to Fig. 182. Tool-Holding Devices—Cutters held on standard arbor. Cutting Tools—Milling cutter, Fig. 209. Number of Cuts—Two. Cut Data—1-in. feed; speed, 90 r.p.m. Coolant—Compound; two ¼-in. streams. Average Life of Tool Between Grindings—1,000 to 1,500 pieces. Gages—Depth, Fig. 210. Production—25 per hr.

OPERATION 19. SQUARING AND COUNTERBORING FRONT END OF BASE FOR HAND-GUARD TENON

Transformation—Fig. 211. Machine Used—Pratt & Whitney hand screw machine. Number of Operators per Machine—One. Work-Holding Devices—Work held on pin, which acts as a stop, Fig. 212. Tool-Holding Devices—Tool held in turret of machine. Cutting Tools—Counterbore and facing mill combined with pilot. Cut Data—Speed, 250 r.p.m.; hand feed. Coolant—Compound. Average Life of Tool Between Grindings—500 pieces. Gages—Plug, Fig. 213. Production—85 per hr.

OPERATION 20. SHAVING UPPER AND UNDERCUT CIRCLES ON REAR LUG

Transformation—Fig. 214. Number of Operators—One. Description of Operation—Shaving burrs and sizing up. Apparatus and Equipment Used—Plug base held in vise and hand shaving tool, Figs. 215 and 216. Gages—Fig. 217. Production—75 per hr.

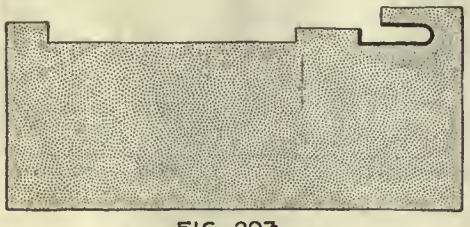
FIG. 203

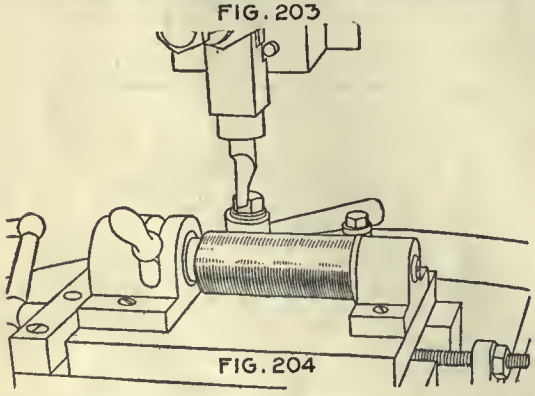
FIG. 204

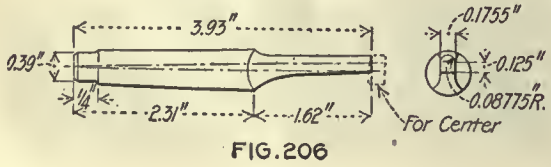

FIG. 206

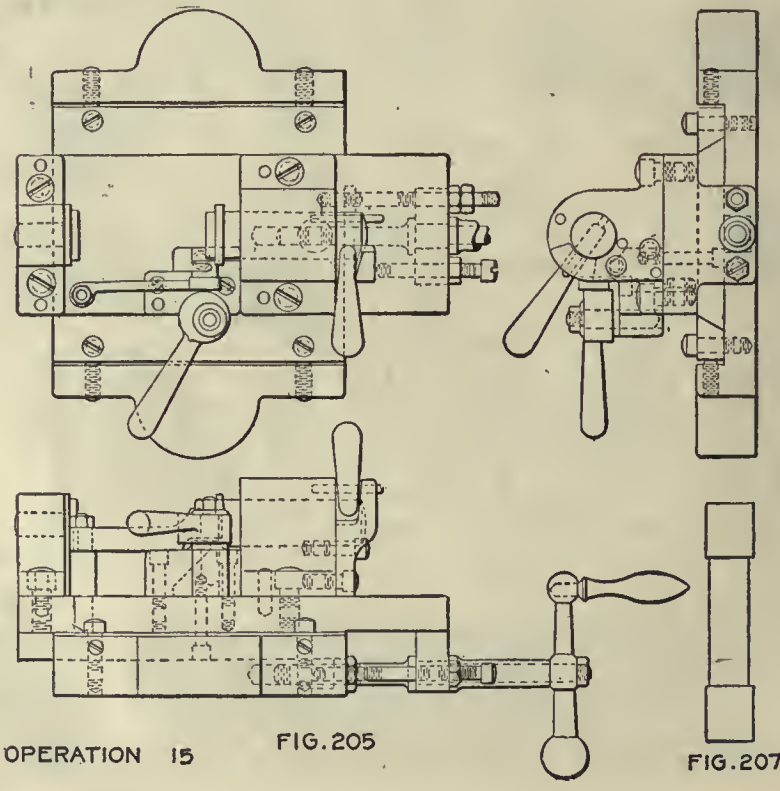
OPERATION 15 FIG. 205 FIG. 207

It will be noted by inspection of some of the milling operations that the full cutting capacity of the miller is utilized. Duplex fixtures are to be seen on most of the millers. For example, in operation 9½, milling to finish width, Fig. 182 shows two of the pieces

Drill jigs of marked simplicity characterize many of the operations on the fixed base and also on the receiver. For example, the two jigs used in drilling the longitudinal hole through the fixed base shown in Figs. 166 and 170 could scarcely be of simpler or better design. A

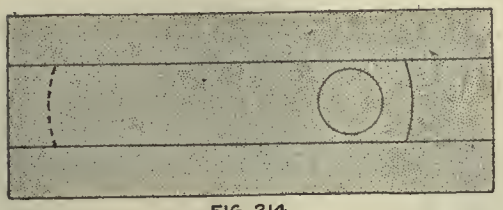

FIG. 214

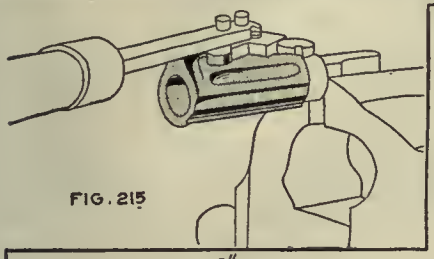

FIG. 215

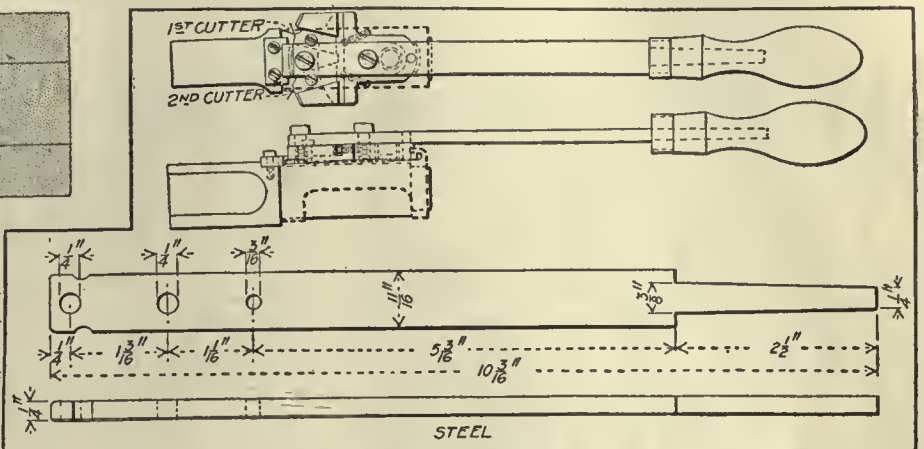

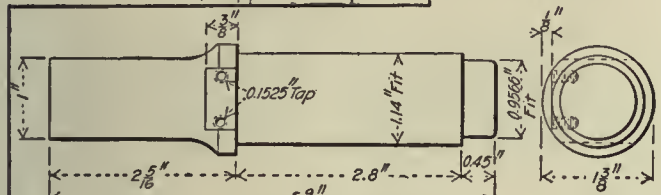

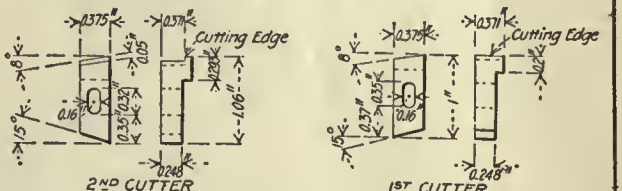

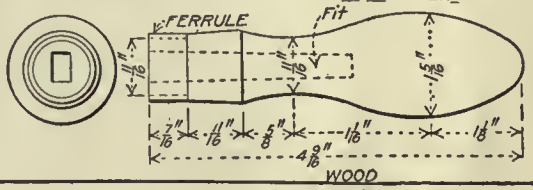

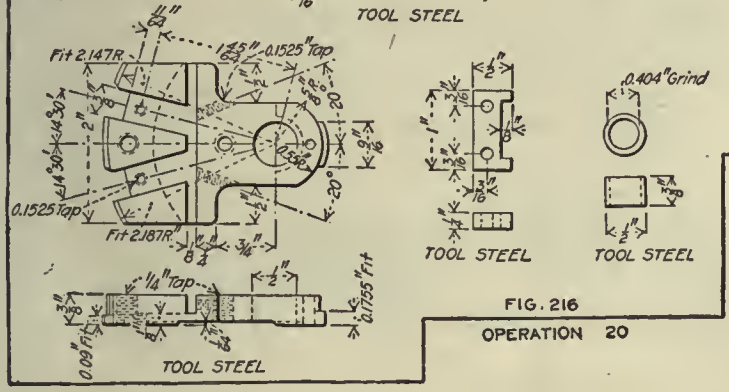

FIG. 216
OPERATION 20

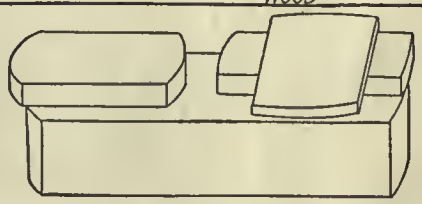

FIG. 217

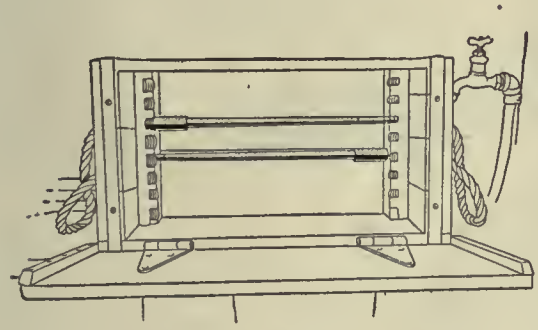

FIG. 240

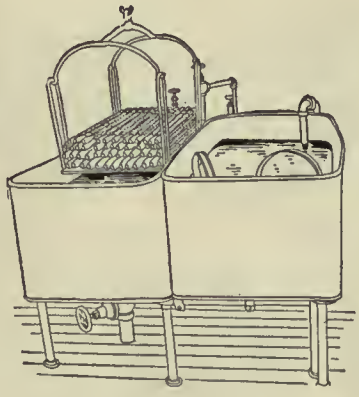

FIG. 241

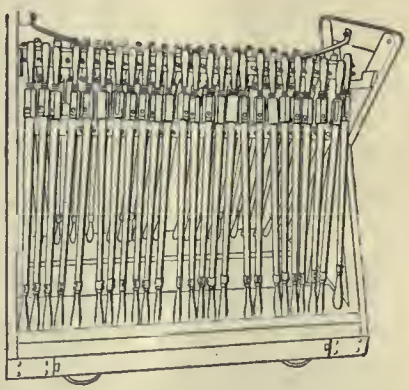

FIG. 242

being side-milled at a time. The same thing is also seen in operation 10, as shown in Fig. 185, where the entire top surfaces of two fixed bases are milled crosswise at one time. This scheme gives double production from an ordinary miller which is too often worked far below its capacity measured by the ability to carry a reasonable cut without overtaxing the cutters.

simple reaming fixture is shown in Fig. 173. This, swinging in the block supports, permits of self-alignment of the work and insures that the reamer will cut evenly all around.

Machine and hand shaving operations are both represented on the fixed base. The former is performed on a crank press, as shown in Fig. 204; the latter is per-

formed with a hand shaving tool shown in Figs. 215 and 216. It will be noted that this hand tool while of simple construction performs an operation that would be difficult to complete on a machine, and its use is possibly an illustration of the fact that hand operations are under certain conditions the most efficient way of machining work, a point that is not always realized in the natural effort to do everything "by machine."

Sometimes an unusual operation is encountered which is difficult to perform on a standard machine tool and also inconvenient to perform by hand. One such is the milling of the bevel seat for the windage screw. This is shown in operation 25, a special machine having been designed and built at the arsenal to take care of this particular operation. Fig. 221 shows this machine in perspective and also in horizontal and vertical projection.

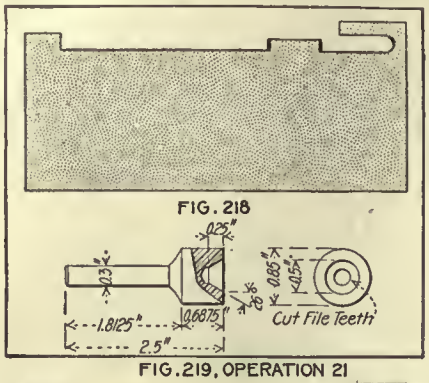

FIG. 218

FIG. 219, OPERATION 21

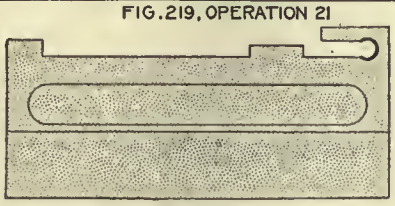

FIG. 220

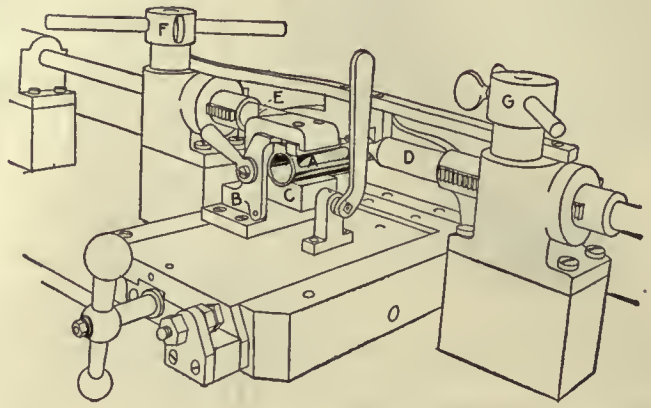

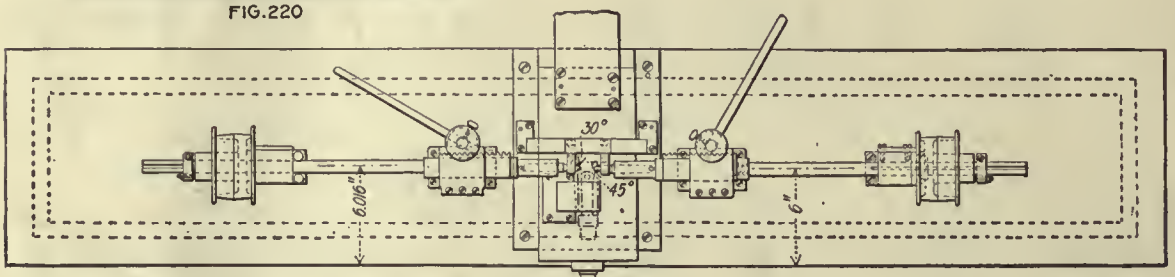

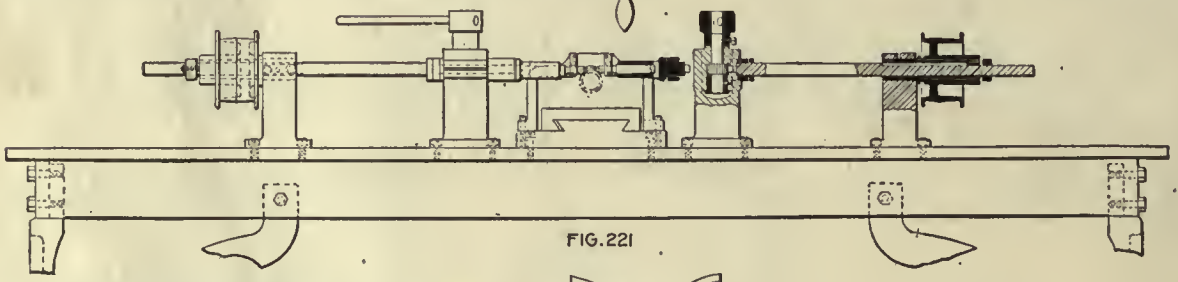

FIG. 221

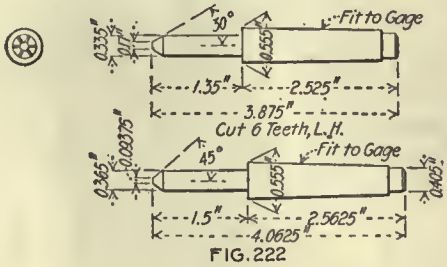

FIG. 222

FIG. 223

OPERATION 25

OPERATION 21. FILING MOVABLE BASE SEAT AND PIVOT

Transformation—Fig. 218. Number of Operators—One. Description of Operation—Burring stud and filing base seat. Apparatus and Equipment Used—Hand hollow mill and also hollow cone file, Fig. 219; 6-in. pillar file. Gages—Straightedge. Production—25 per hr.

OPERATION 22. POLISHING AND CORNERING

Number of Operators—One. Description of Operation—Rounding corners on front end of lug. Apparatus and Equipment Used—Small polishing wheel. Gages—None. Production—20 per hr.

OPERATION 25. MILLING BEVEL SEATS FOR WINDAGE SCREW

Transformation—Fig. 220. Machine Used—Special machine built at arsenal, Fig. 221. Number of Operators per Machine—One. Work-Holding Devices—Work clamped to fixture using lugs at top of base for guides. Tool-Holding Devices—Tool held by taper shank in spindle of machine. Cutting Tools—Two angle cutters, Fig. 222. Number of Cuts—Two. Cut Data—Speed, 200 r.p.m.; hand feed. Coolant—Cutting oil; ⅛-in. stream. Average Life of Tool Between Grindings—1,000 pieces. Gages—Fig. 223. Production—45 or 50 per hr.

Some of the fixtures made at the Springfield arsenal are of necessity elaborate in design and approach special tools in complexity. It is hard to draw the line in some instances between a special tool and a complicated fixture and to say under which heading the apparatus should be defined. This is particularly true regarding the inspecting fixtures. It will be noted that many of these are nice examples of the tool maker's art, and an inspection of them will give an idea of the grade of skill required in a rifle shop toolroom to produce satisfactory appliances.

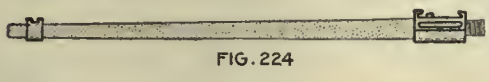

FIG. 224

FIG. 225

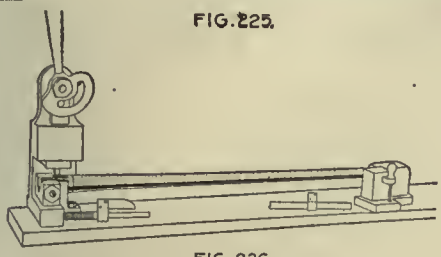

FIG. 226

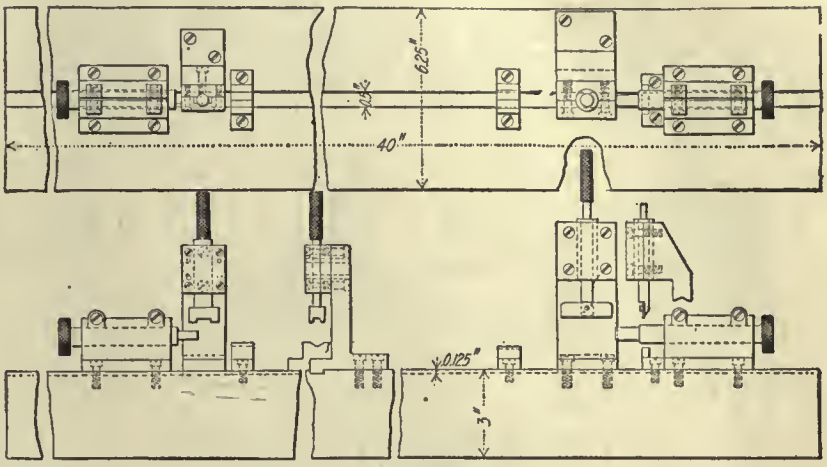

FIG. 229

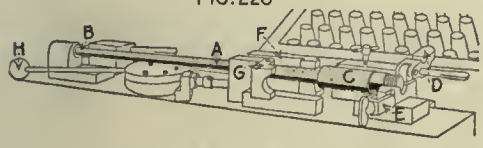

FIG. 228

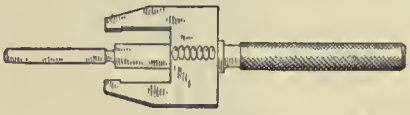

FIG. 227

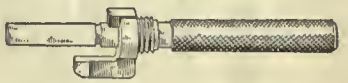

FIG. 230

OPERATION 40

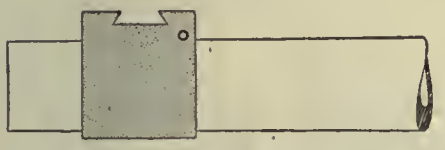

FIG. 231

FIG. 232

OPERATION 41

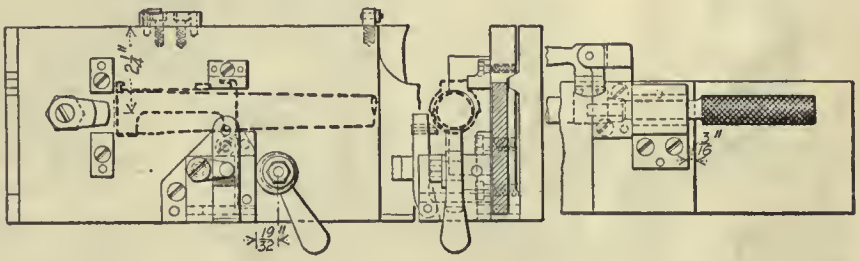

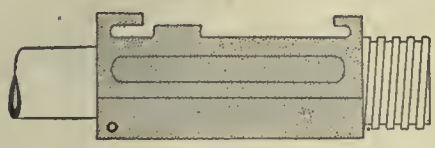

FIG. 233

FIG. 235

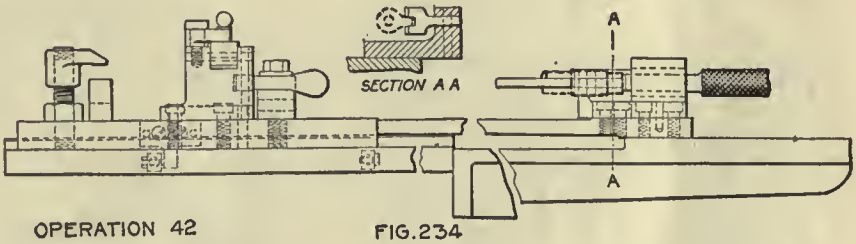

OPERATION 42

FIG. 234

OPERATION 40. ASSEMBLING FRONT STUD AND FIXED BASE ON BARREL

Transformation—Fig. 224. Number of Operators—One. Description of Operation—The stud is driven on over the spline on barrel by means of the small set shown in Fig. 225; the depth of the hole in the end of the set determines the distance of the stud from the muzzle; the fixed base is forced on with the hand press shown in Fig. 228. Apparatus and Equipment Used—The barrel A is placed in the press, Fig. 228, and the front stud is located by the block B; the fixed base C is in position ready to be forced into place; the butt end is held by the strap D, which is fastened by the clamp E; the two swinging jaws F and G are then closed around the barrel in front of the fixed base, and a pull of the handle H forces it into position; the side line on the fixed base now replaces the draw line for all future measurements. Gages—The bench fixture, Fig. 226, tests the location of the stud with the draw line; the finger gages, shown in front of the barrel, test the diameter of the fixed stud; other gages are shown in Figs. 227 and 229, the latter testing the location of the shoulder on the fixed base with relation to the fixed stud; the gage in Fig. 230 tests the location of the fixed-stud shoulder with the extractor cut. Production—75 per hr.

OPERATION 41. DRILLING AND REAMING FRONT SIGHT. FIXED STUD AND BARREL FOR SECURING PIN

Transformation—Fig. 231. Machine Used—Pratt & Whitney two-spindle vertical drilling machine. Number of Operators per Machine—One. Work-Holding Devices—Work held in fixture sliding on table. Tool-Holding Devices—Tool held in drill chuck. Cutting Tools—0.082-in. drill, No. 45; 0.087-in. reamer. Number of Cuts—Two. Cut Data—Speed, 600 r.p.m. Coolant—Water. Average Life of Tool Between Grindings—200 holes. Gages—Plug, Fig. 232. Production—60 per hr.

OPERATION 42. REAMING AND DRILLING FIXED BASE ON BARREL

Transformation—Fig. 233. Machine Used—Pratt & Whitney upright two-spindle drilling machine. Number of Operators per Machine—One. Work-Holding Devices—Work held in fixture, Fig. 234. Tool-Holding Devices—Tool held in drill chuck. Cutting Tools—Drill and reamer, same as in operation 41. Number of Cuts—Two. Cut Data—Same as for operation 41. Coolant—Water. Average Life of Tool Between Grindings—200 pieces. Gages—Plug, Fig. 235. Production—50 per hr.

OPERATION 43. PINNING FRONT STUD AND REAR BASE TO BARREL

Number of Operators—One. Description of Operation—Driving in stud. Apparatus and Equipment Used—Hammer and header. Gages—None. Production—85 per hr.

OPERATION 44. DRILLING REAR-BASE SPLINE-PIN HOLE

Transformation—Fig. 236. Machine Used—Pratt & Whitney two-spindle centering machine. Number of Operators per Machine—One. Work-Holding Devices—Figs. 237 and 238. Tool-Holding Devices—Tool held in drill chuck. Cutting Tools—Drill No. 45; 0.087-in. reamer. Number of Cuts—Two. Cut Data—Same as operation 41. Coolant—Oil with brush. Average Life of Tool Between Grindings—200 pieces. Gages—Plug, Fig. 239. Production—80 per hr.

FIG.236

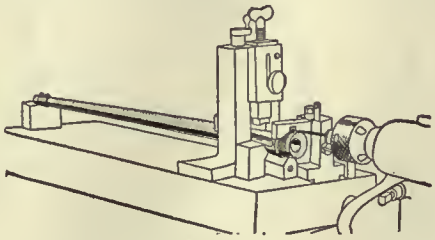

FIG.237

FIG.239

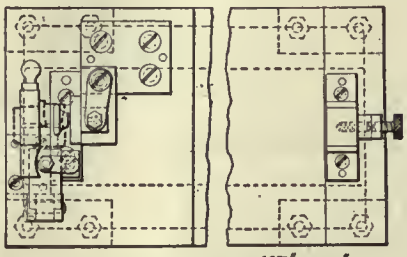

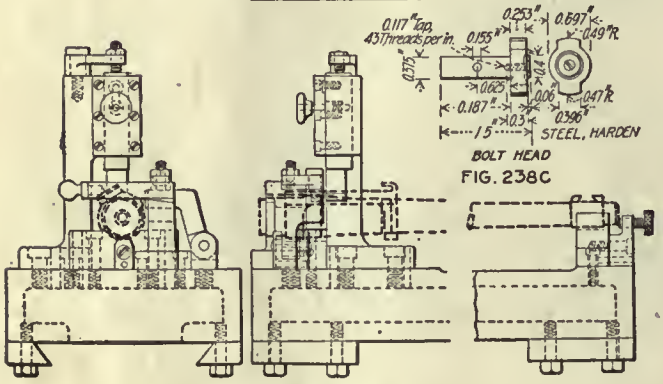

FIG. 238C

FIG 238
OPERATION 44

OPERATION 47. BROWNING

(Previously described.)

OPERATION 2. RIFLE ASSEMBLY

Final reaming of chamber to secure correct head space. This is done after receiver is screwed to barrel, the finishing reamer going through bolt and being held in position by it. Fig. 238-A shows the reamer in position in the bolt and Fig. 238-B with the bolt locked in position in the receiver. This reams the chamber with reference to the bolt and gives proper head room. The bolt is slid into place in the receiver and locked, then the screw A draws it back against front end shoulders. The locking nuts B determine the depth of the chamber. The chambering reamer is then forced into the barrel by the handle shown, the fine threaded screw C being to secure the adjustment of the locknuts B, which stop against the bolt.

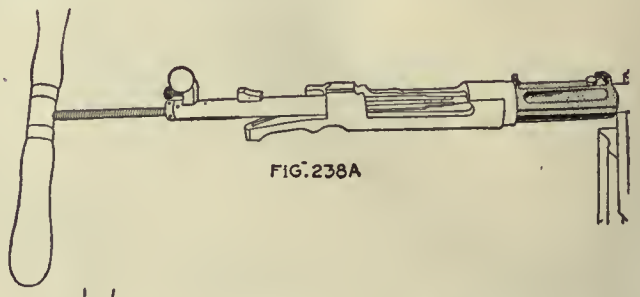

FIG.238A

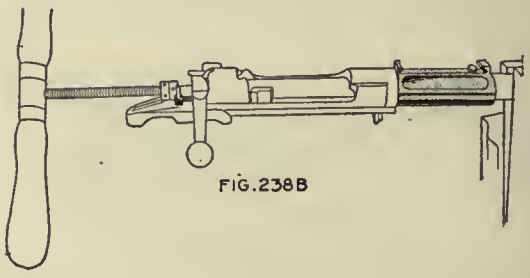

FIG.238B

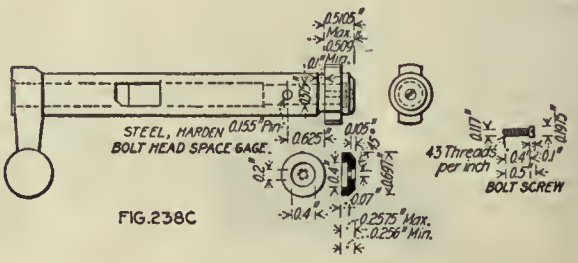

FIG.238C

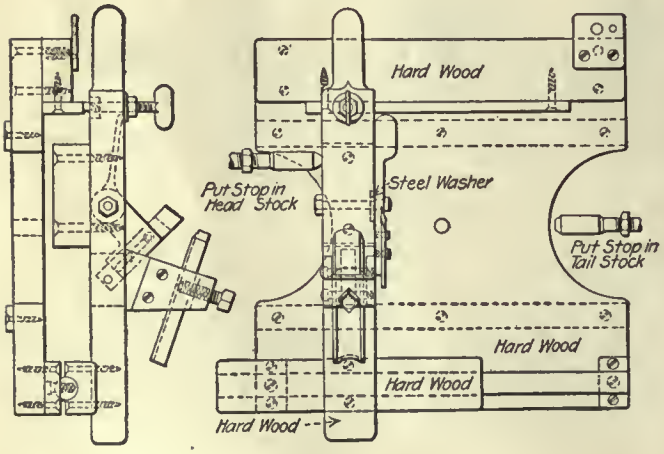

FIG. 243. ARRANGEMENT FOR TURNING WOODEN PLUGS FOR BARRELS

OPERATION 46. GRINDING AND POLISHING END OF SECURING PIN

Number of Operators—One. Description of Operation—Work held in hands and grinding head of pins down flush with base. Apparatus and Equipment Used—Bench grinder made in arsenal. Gages—None. Production—40 per hr.

Operations on the Receiver

The receiver is an example of an extensive series of machine operations on one piece which would be hard to equal, weight for weight, in any other mechanical part manufactured in quantity. It presents many interesting milling and profiling operations which are handled in jigs and fixtures that represent exceptionally good practice.

Many of these fixtures and gages can be applied equally well, in many cases at least, to other lines of work. This applies to both the fixtures and to the methods of gaging which will be new to many shops, especially those which have not been previously engaged in munition work.

The receiver, which is probably the most complicated component of the rifle, judged from the number of operations performed on it, is a drop forging weighing 4.75 lb. It is machined until only 0.98 lb. remains. It is Class C steel, 1¾x1⅜ rectangular, in multiples of 15 in. Some idea of this transformation can be had from Fig. 245. The first operation is to bore the bolt or well hole, and this forms the working point for future operations. After the bottom and left side are milled, they are also used as working points in connection with the bore. A mandrel, which is a good push fit through the hole, is used in nearly all operations on the receiver. This mandrel locates the forging with relation to the bore, and the milled surfaces referred to are forced against stops by a clamping device. As will be seen in the various operations, much of the milling is done in pairs.

It will also be noticed that many formed cutters are used in this connection, some of them being built up of a large number of separate milling cutters. Interlocking cutters have been found much more satisfactory than large, solid formed cutters, both on account of the replacement costs being lower and because they are more easily ground. In this connection it is interesting to observe that the best results are being secured by grinding on the top of the cutting teeth instead of on their faces, as is usual with formed cutters. Special appliances for grinding, among them a sort of pendulum support for the cutter, make this less difficult than might be supposed. One of these devices is shown in Fig. 248, while Fig. 247 shows another special grinder for straight-faced cutters that are grooved on centers.

In order to give some idea of the great many operations necessary on the receiver three views are given in

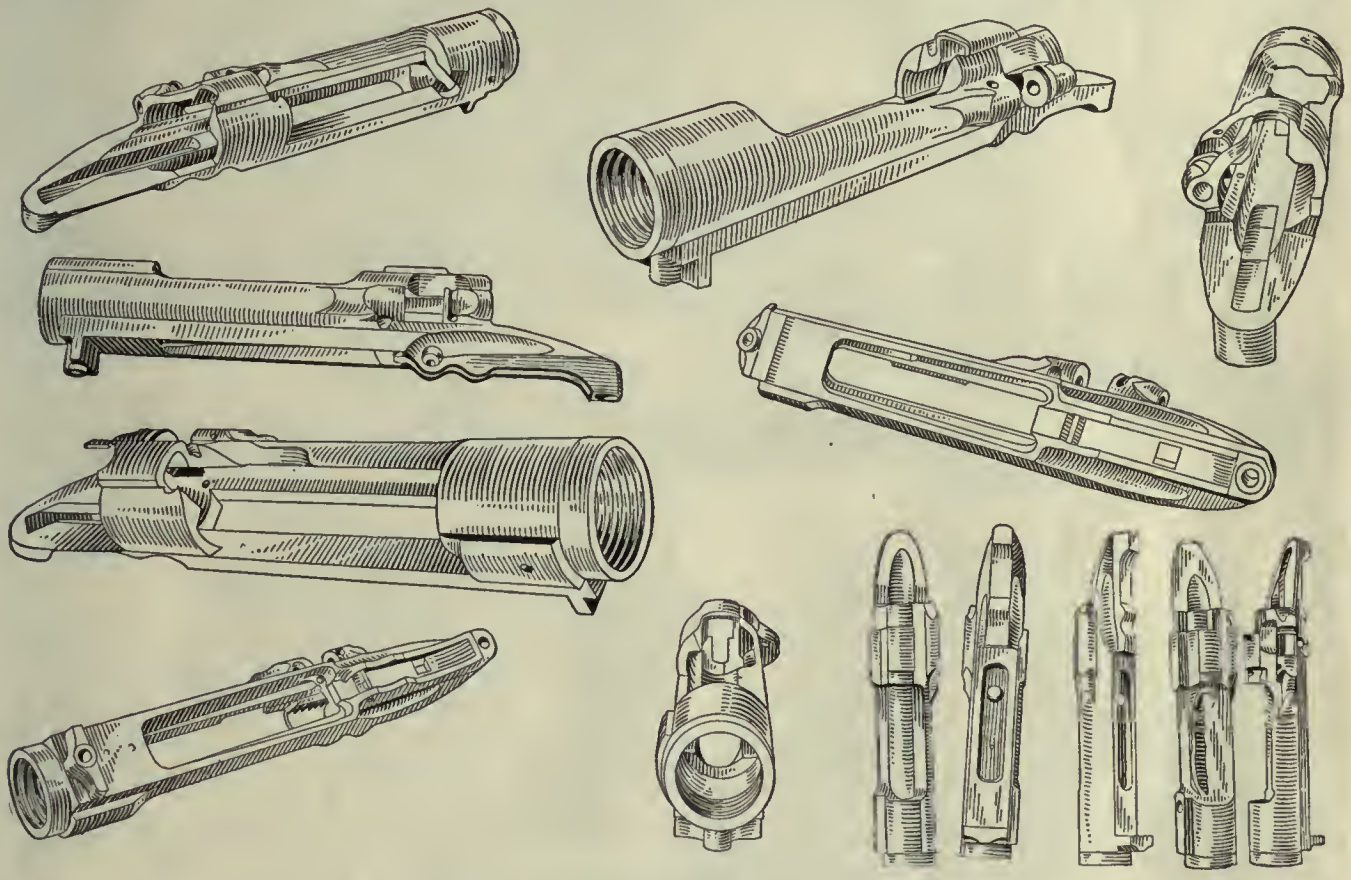

FIG. 245-A. VIEWS OF RECEIVER IN VARIOUS POSITIONS AND STAGES

*Copyright, 1916, Hill Publishing Co.

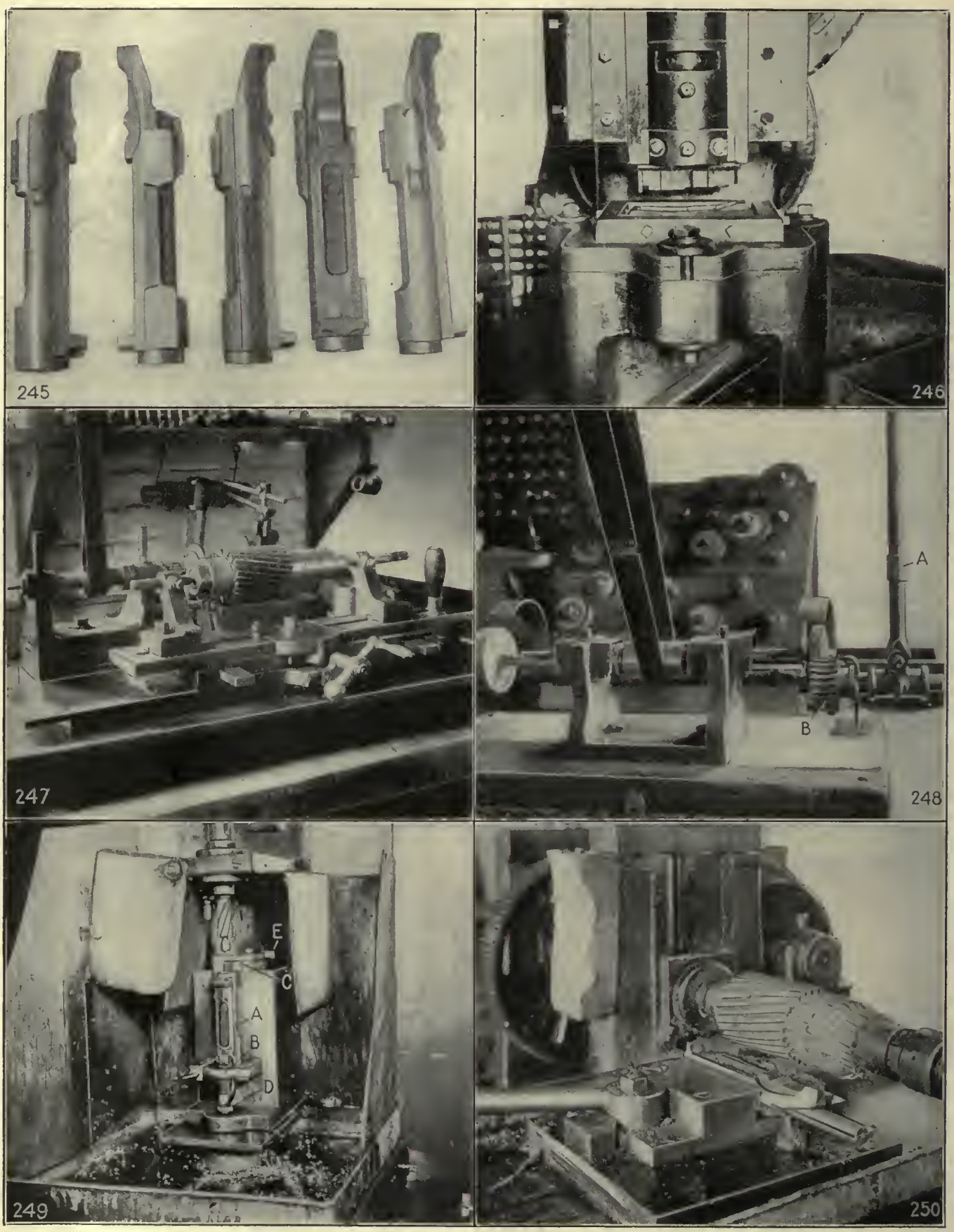

THE RECEIVER PRESENTS AN INTERESTING AND EXTENSIVE SERIES OF MACHINE OPERATIONS

Fig. 245—Views from various positions. Fig. 246—Trimming the forging. Fig. 247—Cutter grinder. Fig. 248—Formed cutter grinder. Fig. 249—Counterboring in drilling machine. Fig. 250—Milling bottom of receiver

Fig. 252. While it is impossible to show all the various cuts in this way, some idea of the problems involved in designing the holding fixtures and cutters for this work will be evident. The various parts of the receiver are referred to by consecutive numbers, the operation numbers being given in each case to make the references clear.

After completion the receiver is casehardened and when it is found necessary, owing to scale having formed, is sand blasted, afterwards being browned. There are four measuring points used in making the receiver: First comes the bore after operation 3, then the front end after operation 7¾. Following operation 11 the right side is used

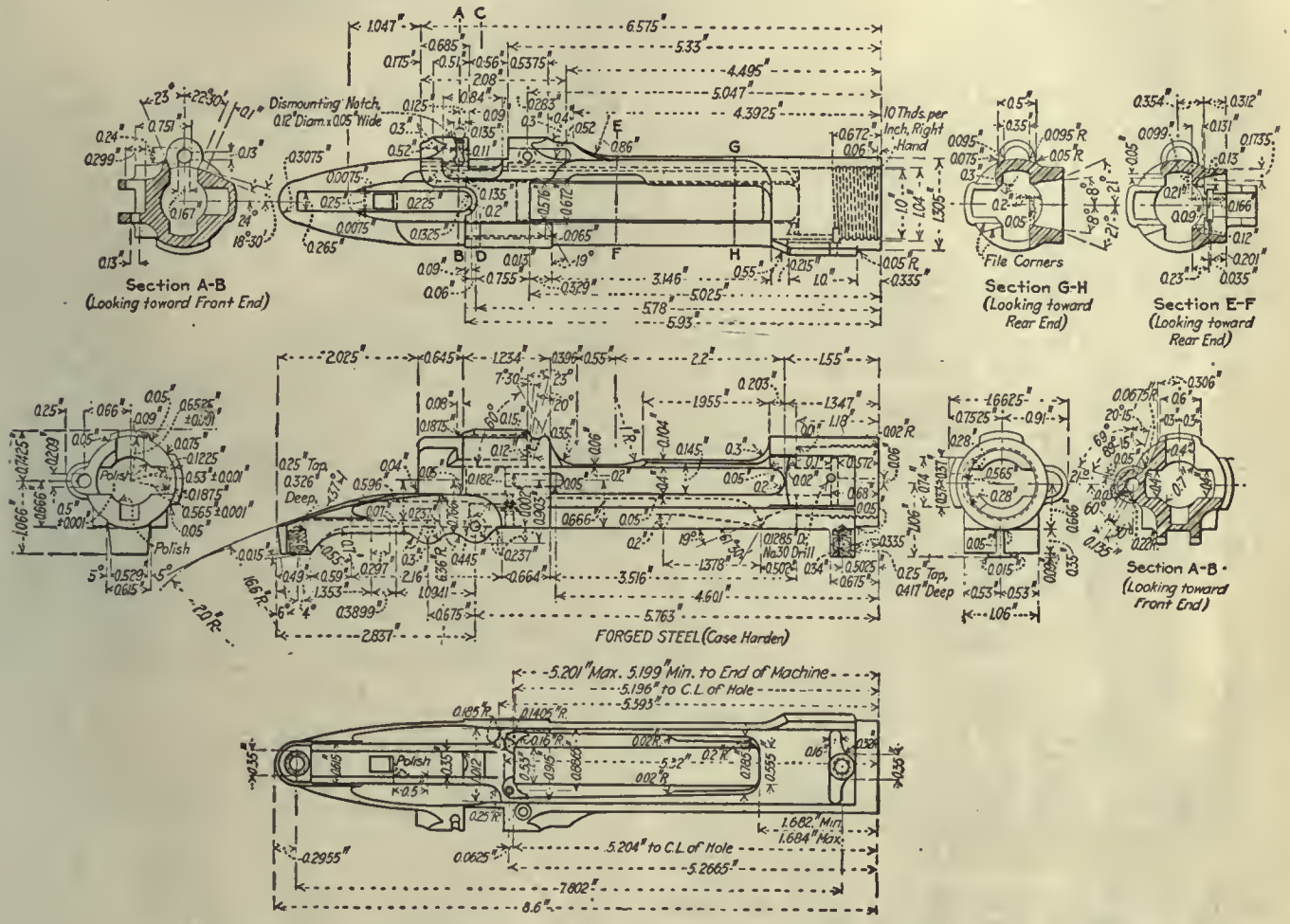

FIG. 251. DETAILS AND WORKING LIMITS OF SPRINGFIELD MODEL 1903 RIFLE RECEIVER

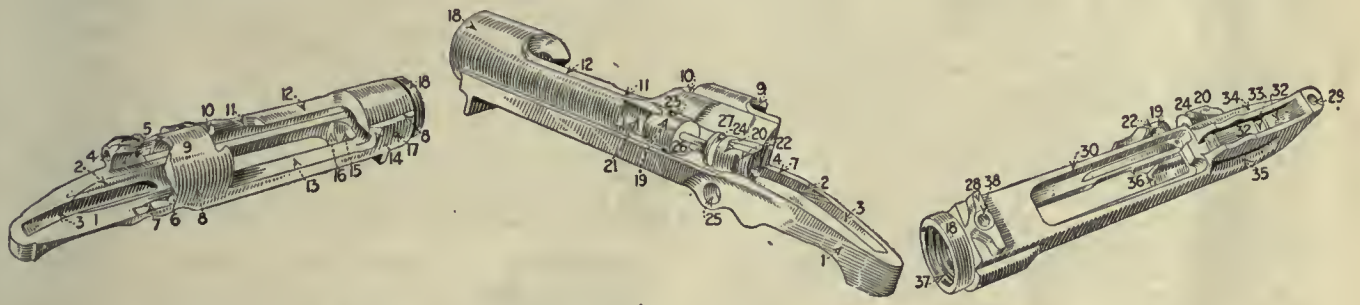

FIG. 252. LIST OF IMPORTANT OPERATIONS ON RECEIVER

1. Top of tang, operations 1, 25, 45, 45½
2. Portion of well, or bolt hole, not cut away, operations 2, 3, 6
3. Cocking-piece groove, operations 49 and 51
4. Cutoff-spindle hole, operation 26
5. Left locking-lug slot, operation 32
6. Right locking-lug slot, operation 33
7. Handle seat, operations 30 and 35
8. Right side, operations 9 and 11
9. Safety-lug slot, operations 31 and 50
10. Cartridge-clip slot, operations 34, 38 and 39
11. Thumb cut off, operation 37
12. Top of left wall, operations 25 and 36
13. Right side, operations 29 and 35
14. Front shoulder, operations 29 and 35
15. Upper ramp, operation 67
16. Lower ramp, operation 66
17. Gas-escape hole, operation 24
18. Tenon, operations 7 and 7½
19. Cutoff lug, front, operation 14
20. Cutoff lug, back, operation 15
21. Profiling over cutoff, front, operation 15
22. Profiling over cutoff, rear, operation 15
23. Ejector-pin hole, operations FF and 23
24. Groove for cutoff-spring spindle, operation 47
25. Sear-pin hole, operation 24
26. Ejector slot, operation 54
27. Clearance for cutoff-spring spindle, operation 47
28. Front guard-screw hole, operation 23
29. Rear guard-screw hole, operation 23
30. Magazine opening, operations 71, 60, 61, 62, 63, 64
31. Bolt-stop pin hole, operations 77 and 81
32. Sear slot, operation 48
33. Sear-nose hole, operations 23 and 59
34. Profiling on side of tang, right, operation 21
35. Profiling on side of tang, left, operation 22
36. Safety-lug slot, operation 52
37. Thread to fit barrel, operation 18
38. Recoil lug, operations 8, 10, 71

OPERATIONS ON THE SPRINGFIELD RIFLE RECEIVER

A-1 Blocking from twin billets
A-2 Blocking from twin billets
B Drop-forging and hot trimming
B-1 Pickling
C Drop-forging to finish and annealing
C-1 Pickling
1 Milling front and rear ends and top of tang
2 Drilling well
3 Reaming well
4 Counterboring well in drill press
6 Reaming well to finish
7 Hollow milling front end
7½ Clamp milling tenon, front end
7¾ Face milling front end
9 Milling right side, rough
8 Milling bottom, roughing
10 Milling bottom to finish
11 Milling right side to finish
AA Removing burrs left by operation 11
13 Milling left side to finish
BB Removing burrs left by operation 13
14 Milling left side, front end
15 Milling left side over cutoff-spindle hole
CC Removing burrs left by operation 14
17 Marking for barrel
16 Hand milling for end of thread
18 Thread milling
19 Milling top to finish
20 Milling under side of tang
21 Profiling under side of tang, right
DD Removing burrs left by operation 21
22 Profiling under side of tang, left
EE Removing burrs left by operation 22
FF Hand milling to remove stock for operation 23
23 Drilling guard-screw, ejector-pin and sear-nose holes and two holes rear of magazine
24 Drilling sear-joint pin hole, clearance and gas-escape hole
GG Removing burrs left by operations 23 and 24
25 Milling top of tang and overwell to remove stock
HH Removing burrs left by operation 25, hand milling, reaming and filing
26 Drilling and reaming cutoff hole and bottoming hole
27 Milling for cutoff
28 Drilling for cutoff, reaming and counterboring sear-joint pin hole
29 Milling to remove stock, right side
30 Milling handle seat, roughing
31 Milling rear of safety-lug slot
II Removing burrs left by operations 29 and 30 (reamer)
32 Shaving left locking-lug slot
33 Shaving right locking-lug slot
34 Milling clip slot, roughing
45 Milling tang
45½ Hand milling to match top of tang
35 Profiling top of right wall, front and rear shoulders and handle seat to finish
JJ Removing burrs left by operation 35 (reamer)
36 Profiling top of left wall
37 Profiling thumb cut over left wall
38 Shaving clip slot
39 Milling corners of clip slot
40 Drilling hole at front end of ejector slot
43 Profiling for cutoff thumb piece
41 Hand milling top and bottom of cutoff cavity (operation 42 combined with this)
44 Hand milling to remove burrs in cutoff thumb-piece cavity
44½ Milling front and rear of cutoff cavity
49½-79 Hand milling to remove stock rear of safety-lug slot; rounding corner over clip slot
46 Drilling two holes for cutoff-spring spindle
47 Profiling groove for cutoff-spring spindle
48 Milling sear slot
49 Milling cocking-piece groove
50 Profiling rear of safety-lug slot
51 Profiling cocking-piece groove
52 Shaving safety-lug slot
53 Shaving front locking-lug slot
54 Shaving ejector slot
55 Profiling bullet clearance
56 Milling end of tang
57 Hand milling safety-lug cam
58 Hand milling extractor cam
KK Removing burrs left by operations 48, 49 and 56
59 Shaving sear-nose slot
71 Milling rear end of magazine to length and rear of recoil lug
69 Profiling front end of recoil lug
60 Milling through magazine rear end
61 Milling through magazine front end
62 Milling through magazine from rear to front
LL Removing burrs left by operation 71
63 Profiling mouth of magazine
64 Profiling magazine to finish
MM Removing burrs left by operation 64 (reamer)
64½-65 Profiling bevel front-end wall of magazine; profiling rear corners of magazine
66 Profiling lower ramp
NN Removing burrs left by operation 64½-65
68 Counterboring for ejector pin and rear guard screw; milling for front end of guard
67 Profiling upper ramp
70 Shaving rear end of magazine
OO Removing burrs left by operation 70 (reamer)
73 Milling right side of rear locking-lug seat to finish
74 Milling right side of front locking lug to finish
75-76 Profiling bolt-stop cavity, first and second cut
77-81 Drilling and counterboring for bolt-stop pin
PP Removing burrs left by operations 73, 74, 77
78 Hand milling cutoff-spring spindle notch
82 Seating front end and reaming sear-pin hole
82½ Drilling three holes for telescope-sight bracket
95-95½ Shaving for extractor cam on bolt; shaving cam, front end
95¾ Removing burrs
83 Polishing circle, front end, for stamping
84 Reaming and countersinking cutoff spindle, joint-pin, ejector-pin and gas holes
85 Stamping "U.S., Springfield Armory, Model 1903"
93 Tapping guard-screw holes
86 Rotary filing cutoff-spring spindle groove
87 Rotary filing under side tang under thumb cut and matching and cornering rear end of front circle
96 Filing top of right wall, matching upper side of tang for polishing and cornering lug right side of front end
88 Stamping serial number
89 Polishing all outer surfaces visible in assembled arm
90 Filing, general cornering
91 Casehardening
91-A Sand blasting
94½ Polishing well
92 Assembling with bolt stop
Special Drill three holes for telescope-sight bracket
Special Tapping three holes for telescope-sight bracket

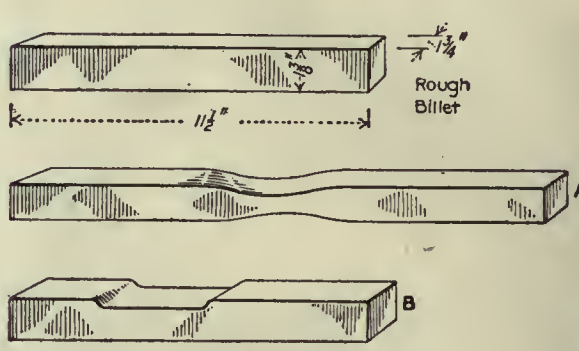

FIG. 253

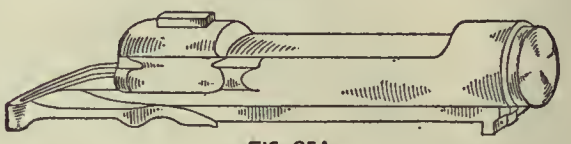
FIG. 254

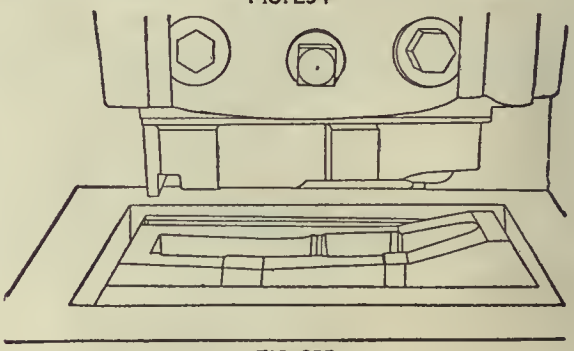
FIG. 255

OPERATION A-1. BLOCKING FROM TWIN BILLETS

Transformation—Fig. 253-A. Number of Operators—One forger and one helper. Description of Operation—Blocking from twin billets; dies held in drop by taper key. Apparatus and Equipment Used—Billings & Spencer 1,200-lb. drop hammer. Gages—None. Production—70 per hr.

OPERATION A-2. BLOCKING FROM TWIN BILLETS

Transformation—Fig. 253-B. Number of Operators—One forger and one helper. Description of Operation—Blocking from twin billets; dies held in drop by taper key; breaks down billet in center ready for rough forging, operation A-1. Apparatus and Equipment Used—Billings & Spencer 1,200-lb. drop hammer. Gages—None. Production—100 per hr.

OPERATION B. DROP FORGING AND HOT TRIMMING

Transformation—Fig. 254. Number of Operators—One man and one helper. Description of Operation—Drop dies held by taper key; trimming dies held in shoe by setscrews; work held by tongs. Apparatus and Equipment Used—Drop hammer, Billings & Spencer, 1,200 lb.; trimming press, T. F. Taft, Worcester, Mass., 10-in. stroke. Gages—None. Production—45 per hr.

OPERATION B-1. PICKLING

Number of Operators—One. Description of Operation—Pickling scale of receiver after drop forging. Apparatus and Equipment Used—Wooden tanks, wire baskets and chain hoists; pickle is 1 part sulphuric acid to 9 parts water. Production—800 per hr. Note—Time required, 15 to 20 min.

in connection with the other two points, both in locating and gaging. This right side remains flat and square with the bottom until operation 74, when the flat portions surrounding the barrel of the receiver are milled to the proper radius. After this, all measurements from the side are taken from the narrow flat surface that extends along the entire right side beside the magazine opening. Bearing in mind that the front and rear end

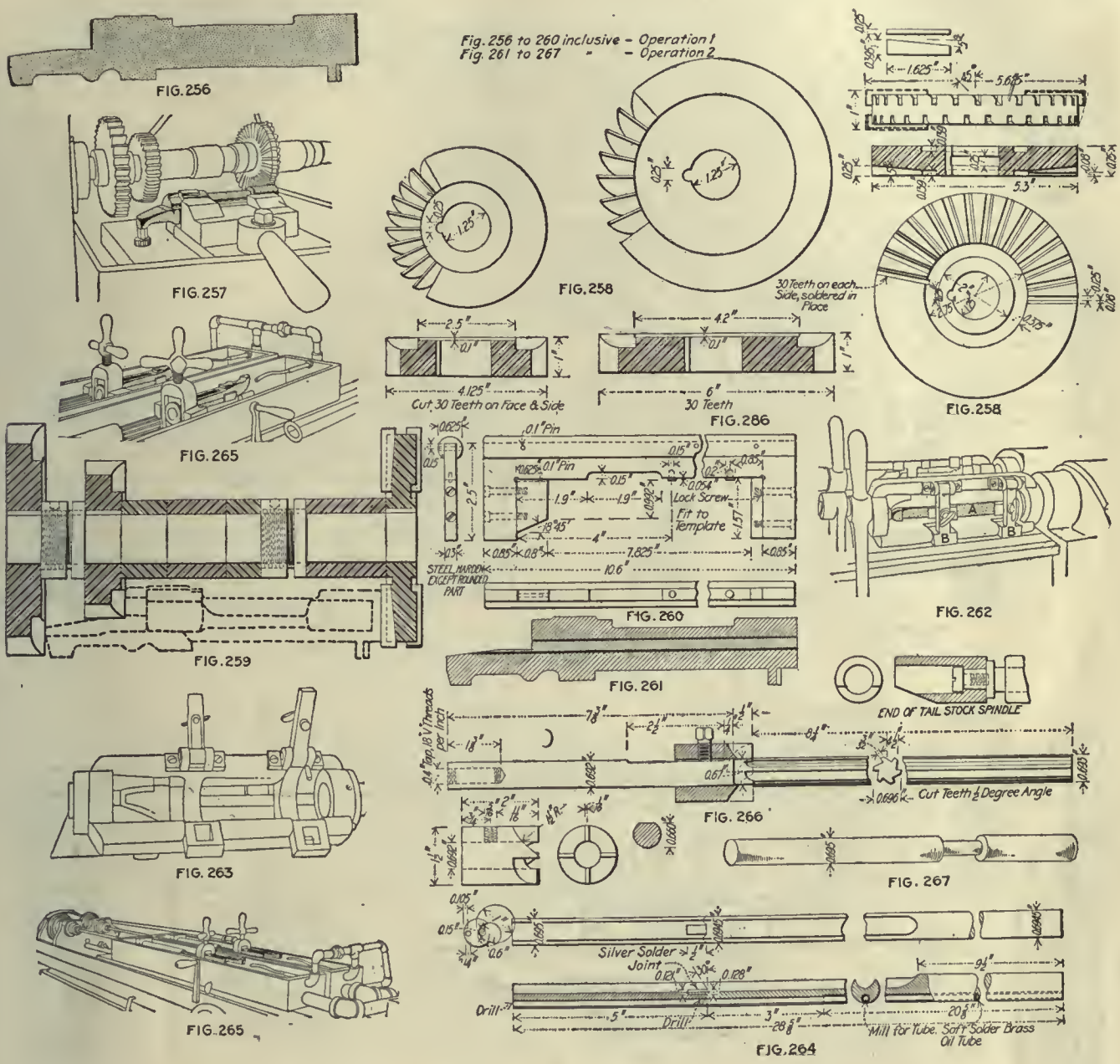

OPERATION C. DROP FORGING TO FINISH AND ANNEALING

Number of Operators—One. Description of Operation—Hammering block to finish shape. Apparatus and Equipment Used—1,200-lb. Billings & Spencer drop hammer. Production—47 per hr. Note—A suboperation C-1 is to pickle again to remove scale, less time being necessary than, in operation B-1.

OPERATION D. TRIMMING

Transformation—Same as Fig. 254. Machine Used—Perkins back-geared press. Number of Operators per Machine—One. Punches and Punch Holders—Punch is a solid block with square shank, which fits clapper-box die, held in shoe by setscrews, Fig. 255. Average Life of Punches—20,000 pieces. Lubricant—None. Gages—None. Production—350 per hr.

OPERATION 1. MILLING FRONT AND REAR ENDS AND TOP OF TANG

Transformation—Fig. 256. Machine Used—Pratt & Whitney Lincoln type miller, No. 2. Number of Machines per Operator—Two. Work-Holding Devices—Work held in vise with grooved jaws, Fig. 257. Tool-Holding Devices—Special arbor. Cutting Tools—Three side-cutting mills, Figs. 258 and 259, 6 in., 7 in., 4 in. Cut Data—60 r.p.m., ½-in. feed. Coolant—Compound, ¼-in. stream. Average Life of Tool Between Grindings—1,000 pieces. Gages—Length, Fig. 260. Production—30 per hr., one machine. Note—Receivers are handled in boxes of 20 each, a compartment being provided for each piece.

OPERATION 2. DRILLING WELL HOLE OR BORE

Transformation—Fig. 261. Machine Used—Pratt & Whitney, similar to gun-barrel drilling machine. Number of Machines per Operator—14. Work-Holding Devices—Special fixture, closed, Fig. 262, and open, Fig. 263. Tool-Holding Devices—Tool or drill held in carriage by setscrew. Cutting Tools—Barrel drill, size 0.695, Fig. 264. Number of Cuts—One. Cut Data—Receiver runs 1,500 r.p.m.; feed, $\frac{5}{8}$ in. per min. Coolant—Triumph cutting oil, under pressure from small pump on lathe. Production—25 min. per machine.

OPERATION 3. REAMING WELL

Transformation—Same as Fig. 261. Machine Used—Ames Manufacturing Co. reaming machine. Number of Operators per Machine—One. Work-holding Devices—Work held on block by screw clamp, Fig. 265. Tool-Holding Devices—Reamer held in collet by setscrew. Cutting Tools—Reamer and facing tool, Fig. 266. Number of Cuts—One. Cut Data—70 r.p.m.; feed, 10 in. per min. Coolant—Triumph cutting oil, ¼-in. stream. Average Life of Tool Between Grindings—100 pieces. Gages—Plug, Fig. 267. Production—30 per hr.

OPERATION 4. COUNTERBORING WELL IN DRILL PRESS

Transformation—Fig. 268. Machine Used—Ames Manufacturing Co. vertical machine. Number of Operators per Machine—One. Work-Holding Devices—Work held in stand fixture by straps, Fig. 269. Tool-Holding Devices—Taper shank in spindle. Cutting Tools—1-in. counterbore with pilot, running $1\frac{3}{8}$ in. deep, Fig. 270. Number of Cuts—One. Cut Data—120 r.p.m.; feed, $\frac{5}{8}$ in.; weight feed. Coolant—Cutting oil, $\frac{1}{8}$-in. stream. Average Life of Tool Between Grindings—300 pieces. Gages—Plug. Fig. 271. Production—35 per hr.

OPERATION 6. REAMING WELL HOLE TO FINISH

Transformation—Same as Fig. 261. Machine Used—Ames Manufacturing Co. reaming machine. Number of Machines per Operator—Two. Work-Holding Devices—Same as Fig. 265. Tool-Holding Devices—Reamer held in chuck by setscrew. Cutting Tools—1 "scrape" reamer, size 0.699 in., Fig. 272. Cut Data—70 r.p.m.; feed, 10 in. Coolant—Cutting oil, $\frac{1}{4}$-in. stream. Average Life of Tool Between Grindings—1,000 pieces. Gages—Plug, Fig. 273. Production—40 per hr. for two machines.

OPERATION 7. HOLLOW MILLING FRONT END

Transformation—Fig. 274. Machine Used—Upright drilling machine made in arsenal; 18 in. Number of Operators per Machine—One. Work-Holding Devices—Work held in stand fixture, same as Figs. 249 and 269. Tool-Holding Devices—Hollow mill, taper shank. Cutting Tools—Hollow mill, $1\frac{1}{4}$ with pilot, Fig. 275; oil feeds into cup A at top of mill and runs down to cutting edge. Number of Cuts—One. Cut Data—Speed, 75 r.p.m.; hand feed. Coolant—Cutting oil, $\frac{1}{4}$-in. stream. Average Life of Tool Between Grindings—1,000 pieces. Gages—Depth, Fig. 276. Production—30 per hr.

OPERATION 7½. CLAMP MILLING TENON, FRONT END

Transformation—Fig. 277. Machine Used—Machine made in shops. Number of Operators per Machine—One. Work-Holding Devices—Work held on mandrel, using tang for turning, Fig. 278. Tool-Holding Devices—Tool held in block, set screw on side and top. Cutting Tools—Special forming shaving cutter, Fig. 279. Number of Cuts—One. Cut Data—Speed, 70 r.p.m.; hand feed. Coolant—Cutting oil, $\frac{1}{8}$-in. stream. Average Life of Tool Between Grindings—2,000 to 3,000 pieces.

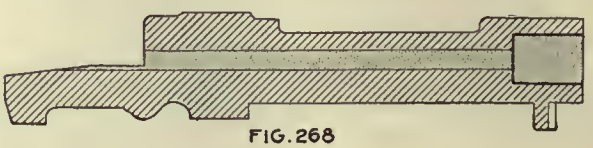

FIG. 268

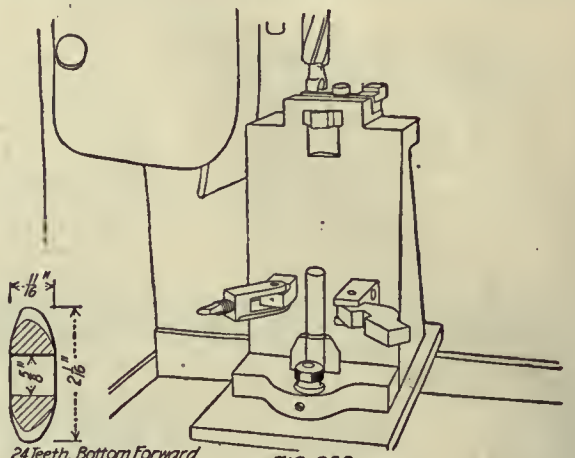

FIG. 269

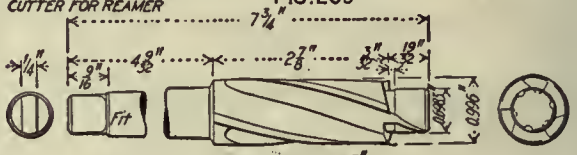

FIG 270

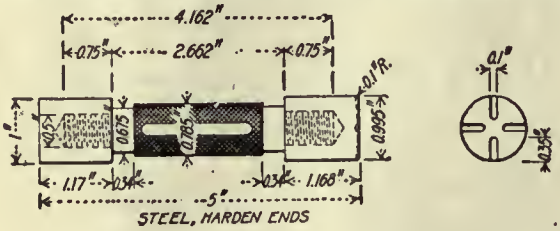

FIG. 271

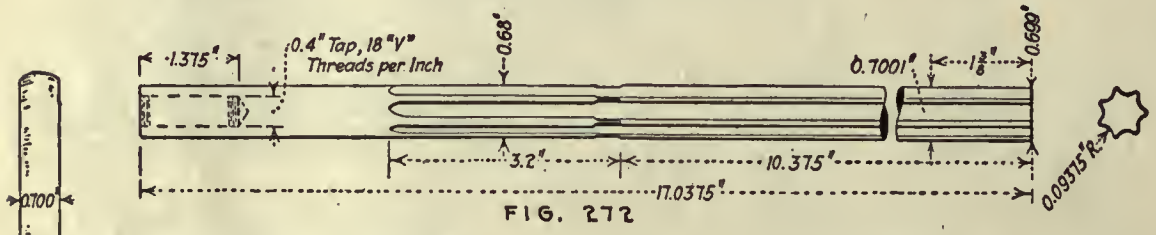

FIG. 272

FIG. 273

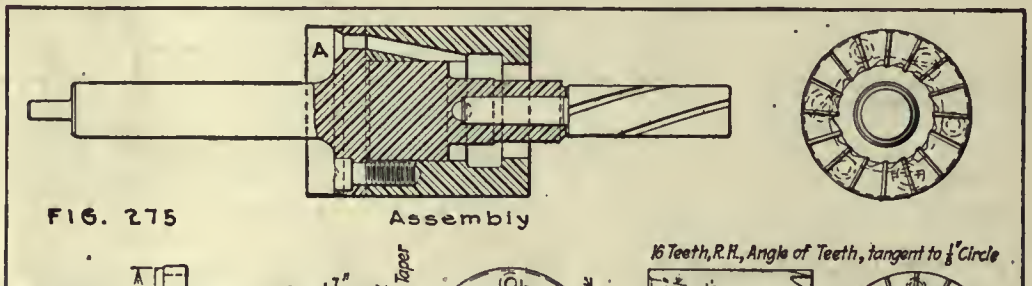

FIG. 275 Assembly

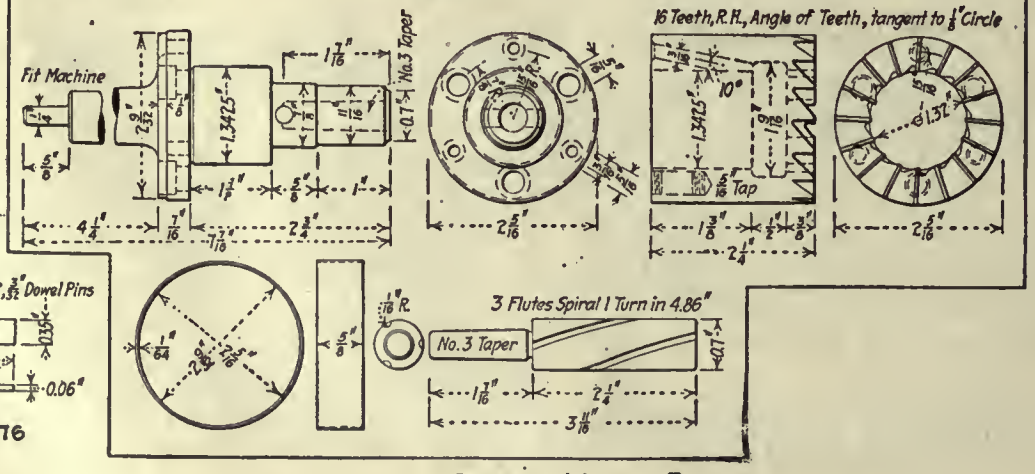

FIG. 276

FIG. 274

Operation 7

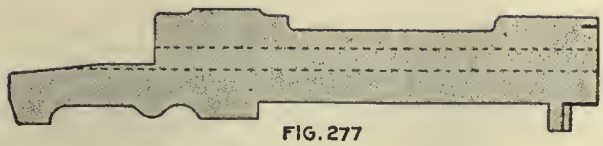

FIG. 277

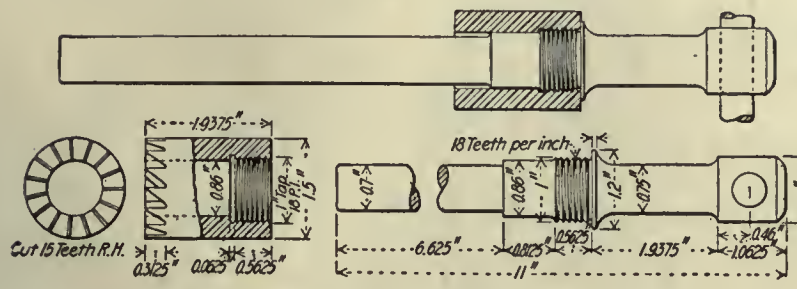

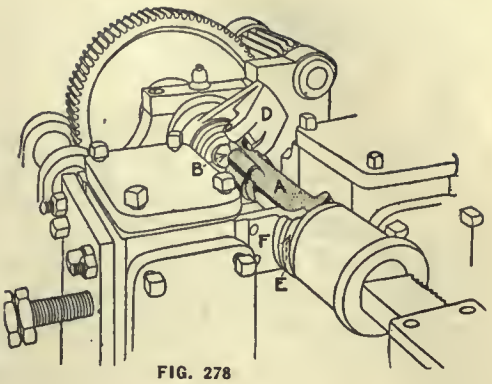

FIG. 278

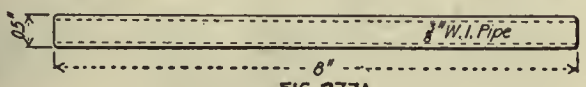

FIG. 277A

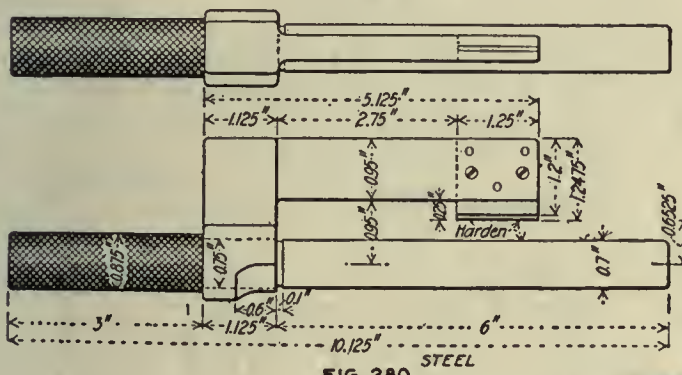

FIG. 280 STEEL

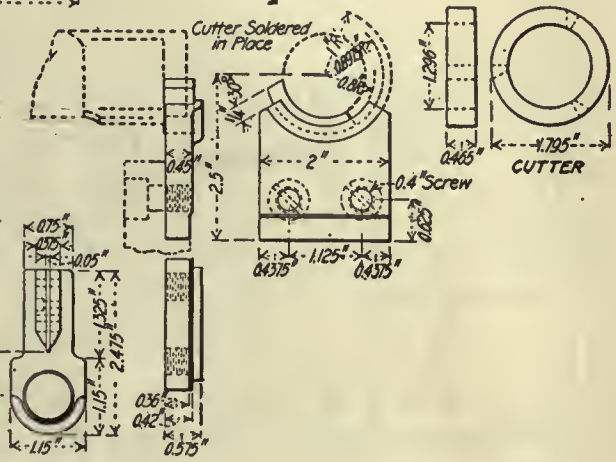

FIG. 279

OPERATION 7½

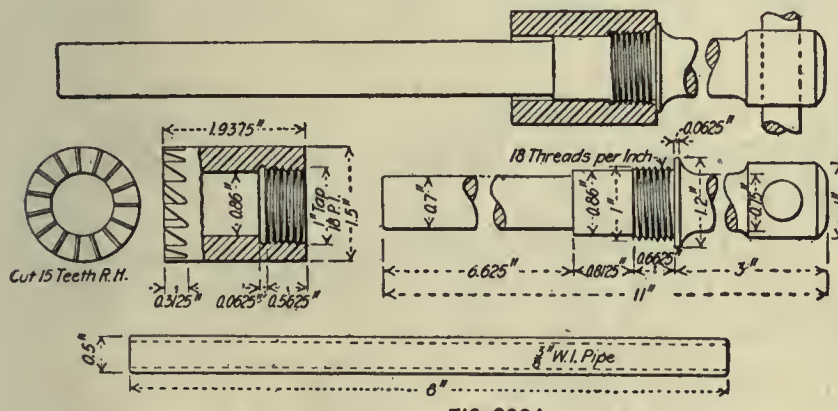

FIG. 280A

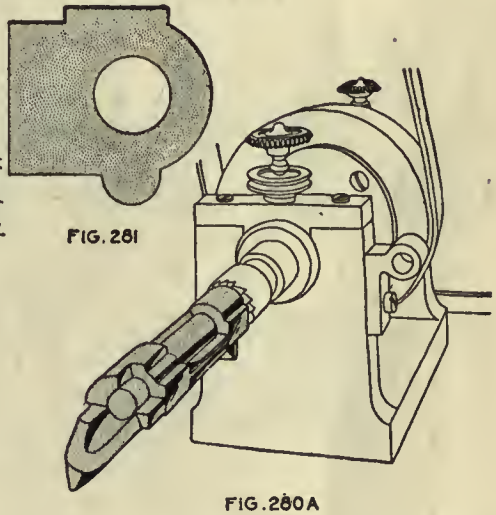

FIG. 281

FIG. 280A

Gages—Snap, size 1.305, Fig. 280. Production—30 per hr. Note—The hole forms the working point until after operation 9, then becomes a holding point, working points being transferred to sides and bottom.

OPERATION 9

OPERATION 7¾. FACE MILLING FRONT END

Machine Used—Machine built in shops. Number of Operators per Machine—One. Work-Holding Devices—Work held in hands, Fig. 280-A. Tool-Holding Devices—Taper shank for driving face mill. Cutting Tools—Cutter, taper shank; end mill with pilot, 1½ in. in diameter. Number of Cuts—One. Cut Data—Speed, 100 r.p.m. Coolant—Cutting oil put on with brush. Average Life of Tool Between Grindings—15,000 to 20,000 pieces. Gages—None. Production—175 per hr. Note—This simply burrs end after No. 7½ cut.

OPERATION 9. MILLING RIGHT SIDE, ROUGH

Transformation—Fig. 281. Machine Used—Pratt & Whitney Lincoln type, Fig. 282. Number of Operators per Machine—One. Work-Holding Devices—Work clamped to block, using mandrel as a working point. Tool-Holding Devices—Cutters held on arbor. Cutting Tools—Milling cutters, Fig. 283. Cut Data—Speed, 50 r.p.m.; ¾-in. feed. Coolant—Compound. Average Life of Tool Between Grindings—2,000 pieces. Gages—Stand, Fig. 284; A, height; B, width of right side; C, mandrel that holds receiver in D to gage side and bottom. Production—20 per hr. Note—In this and many work-holding fixtures that follow, the mandrel in the receiver is located on adjustable stops A, the work clamped by jaws B, Fig. 282. of the receiver on the right side remain flat until operation 74 makes clear many of the gaging operations which might otherwise be more or less confusing.

In following the description of the operations on the receiver, the reader will be aided by referring back to Fig. 252, which shows the principal cuts by number. This illustration, in connection with the "transformation diagram" given for each change of shape in the piece, should make clear what is being done.

There is another special operation on rifles for target practice—tapping the holes for the telescope-sight bracket, after the drilling of operation 82½. This, as in the case of 82½, is done for sharpshooters' rifles only.

OPERATION 8. MILLING RECEIVER BOTTOM, ROUGHING

Transformation—Fig. 285. Machine Used—Pratt & Whitney Lincoln type, belt drive. Number of Machines per Operator—Two. Work-Holding Devices—Work held in formed vise jaws, Fig. 286. Tool-Holding Devices—Cutters held on arbor. Cutting Tools—Gang-mill form cutters, Fig. 287. Number of Cuts—One. Cut Data—Speed, 50 r.p.m.; feed, ½ in. per min. Coolant—Compound, three ¼-in. streams. Average Life of Tool Between Grindings—2,000 pieces. Gages—Fig. 288; A, profile and height of tang from bottom; B, height of bottom; C, top of well to bottom of tang; D, same as in previous operation. Production—20 per hr. per machine.

OPERATION 10. MILLING BOTTOM TO FINISH

Transformation—See Fig. 285. Machine Used—Pratt & Whitney Lincoln type belt-drive miller. Number of Operators per Machine—One. Work-Holding Devices—In vise with formed vise jaws (see Fig. 286). Tool-Holding Devices—Standard screw arbor. Cutting Tools—Gang of form cutters, Fig. 289. Number of Cuts—One. Cut Data—50 r.p.m.; ½-in. feed per minute. Coolant—Cutting oil, drop at a time. Average Life of Tool Between Grindings—2,000 pieces. Gages—Form, Fig. 290. Production—20 pieces per hr.

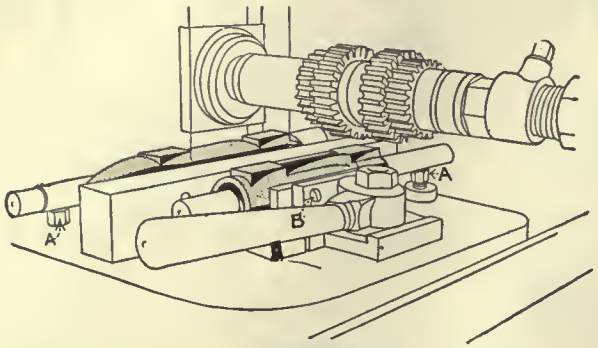

FIG. 282

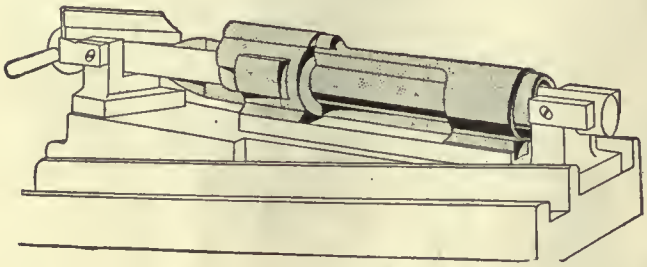
FIG. 284

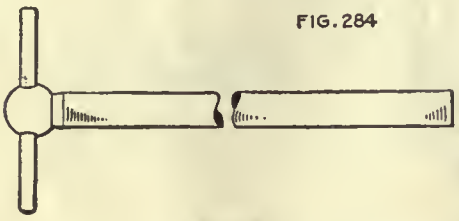
FIG. 284C

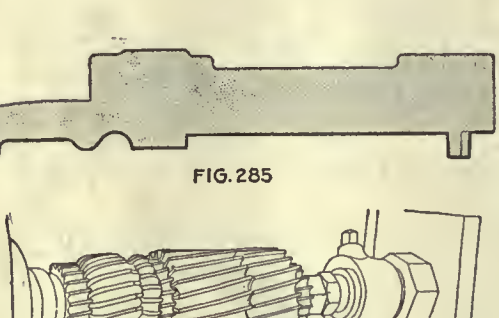
FIG. 285

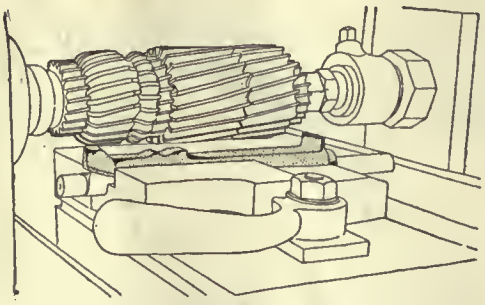
FIG. 286

FIG. 288D

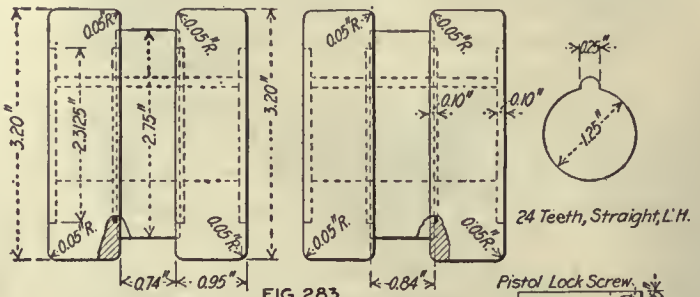

FIG. 283

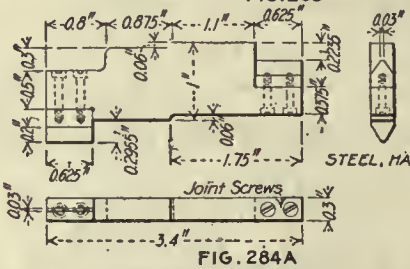

FIG. 284A

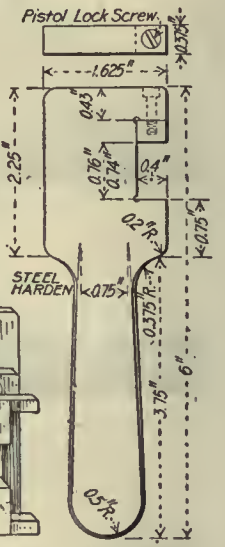

FIG. 284B

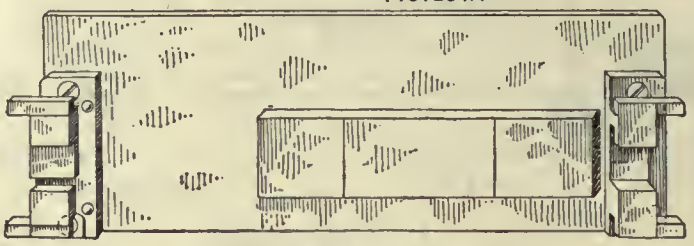
FIG. 284D

FIG. 287

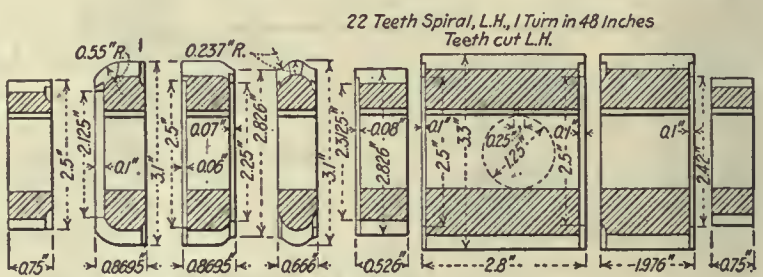

FIG. 288A

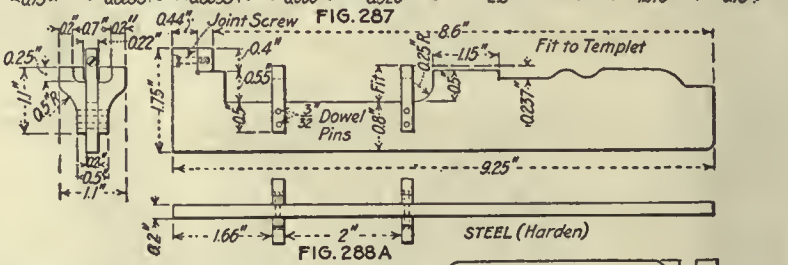

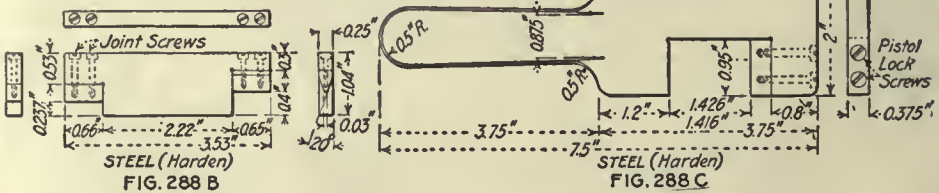

FIG. 288B

FIG. 288C

OPERATION 8

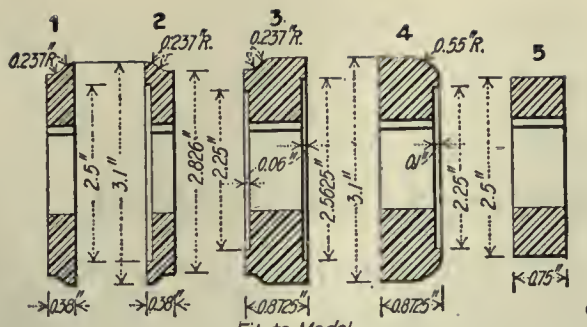

Fit to Model
Mills 1.&2 Cut 28 Teeth, Straight, L.H.
Mills 3,4&5 " " " , Spiral, 1-Turn in 48 Inches, R.H. Teeth, L.H.

FIG. 289

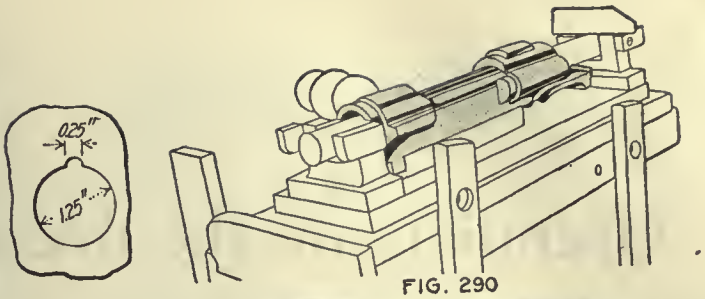

FIG. 290

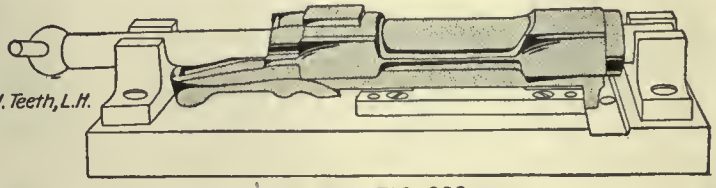

FIG. 290

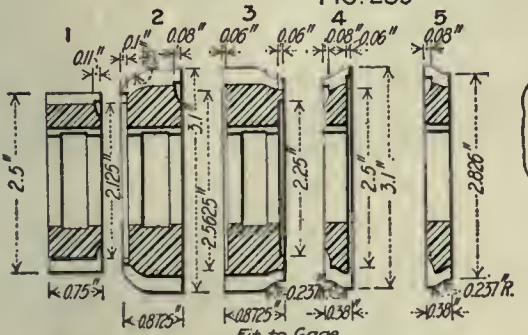

Fit to Gage
Mills 4&5 Cut 28 Teeth L.H. Straight
Mills 1,2&3 " " " ", Spiral R.H. 1 Turn in 48 Inches

FIG. 289

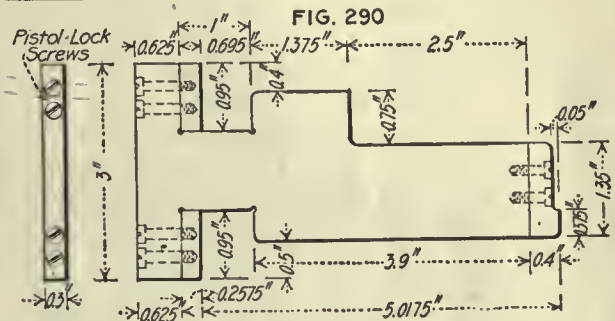

FIG. 290A

FIG. 290 B

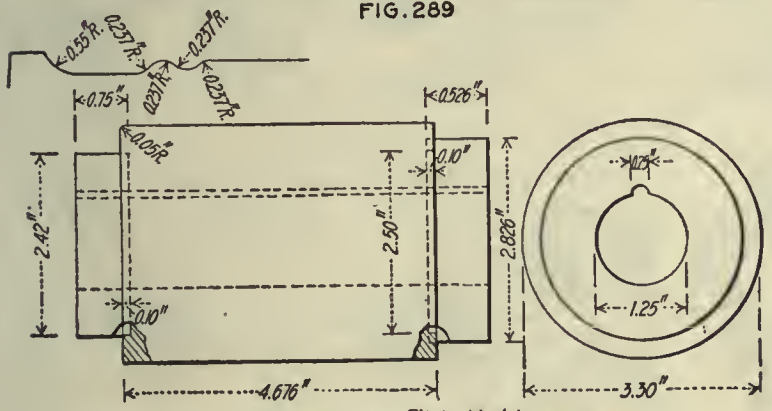

Fit to Model
28 Teeth, Spiral, 1-Turn in 48 Inches, L.H. Teeth Cut L.H.

FIG. 289

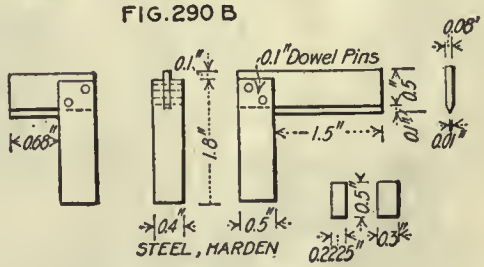

FIG. 290C

OPERATION 10

Operations on the Receiver—(*Continued*)

While the first ten operations on the receiver have brought it to the stage where it begins to show what the finished piece is nearly like; the real work has only begun as there are many more intricate as well as interesting operations to be performed.

The use of mandrels for locating the work, both for machining and for gaging the various cuts, is a noticeable feature of the operations on the receiver, which lends itself especially to this method of handling. This and other features of the work should be helpful.

OPERATION 11. MILLING RIGHT SIDE TO FINISH

Transformation—Same as Fig. 281. Machine Used—Pratt & Whitney Lincoln type belt-drive miller. Number of Operators per Machine—One. Work-Holding Devices—Work clamped to block, using bottom as working points, Fig. 291. Tool-Holding Devices—Cutters held on standard arbor. Cutting Tools—Similar to Fig. 283. Number of Cuts—One. Cut Data—Speed, 50 r.p.m.; ½-in. feed. Coolant—Cutting oil, drop at a time. Average Life of Tool Between Grindings—2,000 pieces. Gages—Similar to Fig. 296; the fingers show if form is right; other gages same as operation 9. Production—20 pieces per hour. Note—Stops A and jaws B, Fig. 291. Side gaged by straight-edge across top of mandrel.

OPERATION AA. REMOVING BURRS AFTER OPERATION 11

Number of Operators—One. Description of Operation—Scraping burrs left on edges from operation 11. Apparatus and Equipment Used—File and scraper. Production—280 per hr.

OPERATION 13. MILLING LEFT SIDE TO FINISH

Transformation—Fig. 292. Machine Used—Pratt & Whitney Lincoln type belt-drive miller. Number of Operators Per Machine—One. Work-Holding Devices—Special vise, Fig. 293, located by bottom. Tool-Holding Devices—Cutters held on arbor. Cutting Tools—Form cutters, Fig. 294. Number of Cuts—Two. Cut Data—Speed, 50 r.p.m.; ½-in. feed. Coolant—Cutting oil, drop at a time. Average Life of Tool Between Grindings—2,000 pieces. Gages—Stand and form, Figs. 295 and 296. Production—20 pieces per hour.

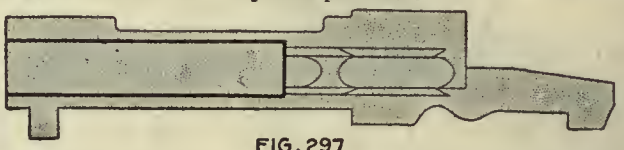

FIG. 297

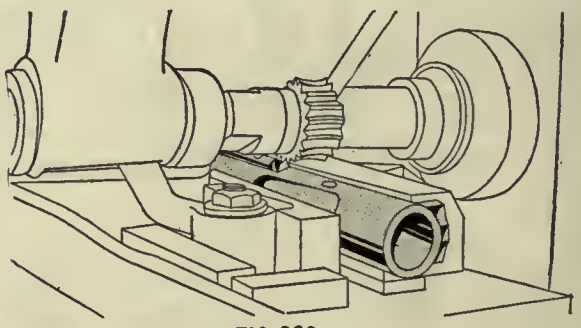

FIG. 298

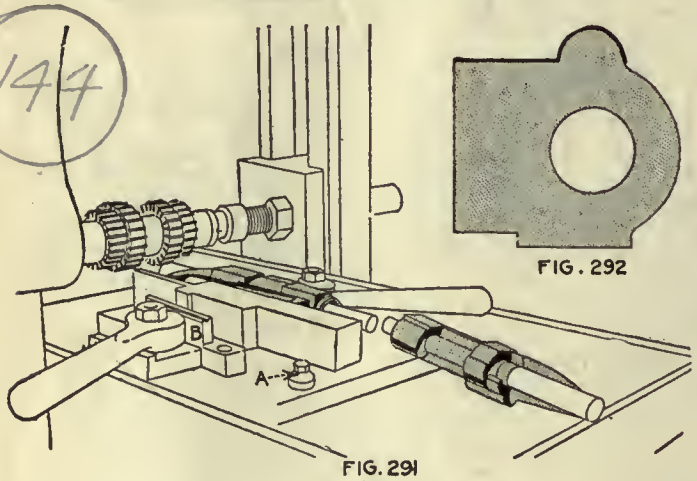

FIG. 291

FIG. 292

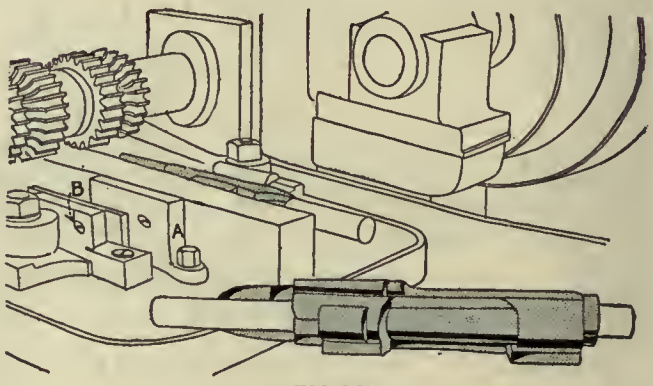

FIG. 293

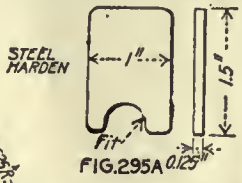

FIG. 295A

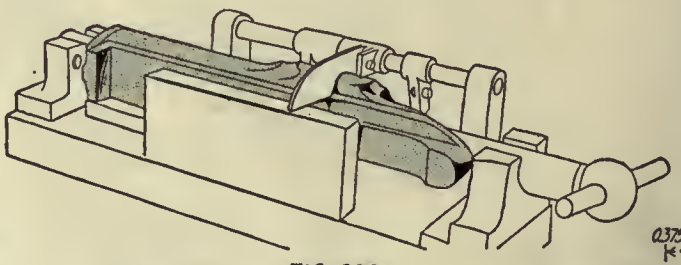

FIG. 296

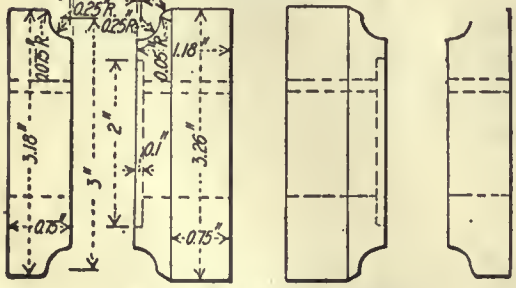

Fit to Gage. 24 Teeth, Straight, L.H.

FIG. 294

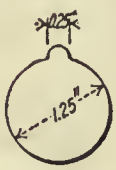

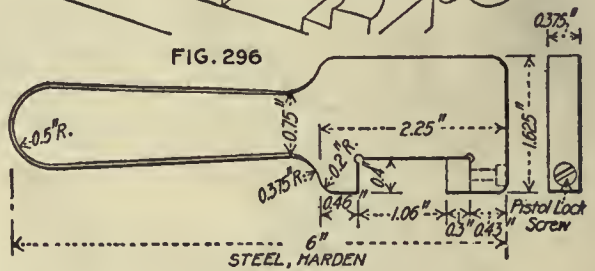

FIG. 295B

OPERATION 13

OPERATION BB. REMOVING BURRS LEFT BY OPERATION 13

Number of Operators—One. Description of Operation—Filing burrs from edge after operation 13. Apparatus and Equipment Used—Cut, file and scraper. Production—250 per hr.

OPERATION 14. MILLING LEFT SIDE, FRONT END

Transformation—Fig. 297. Machine Used—Standard No. 4½ Universal. Number of Operators per Machine—One. Work-Holding Devices—Fig. 298. Tool-Holding Devices—Held on arbor. Cutting Tools—Hollow radius cutter, Fig. 299. Number of Cuts—One. Cut Data—Speed, 270 r.p.m.; feed, 3 in. per min. Coolant—Compound. Average Life of Tool Between Grindings—200 pieces. Gages—Fig. 300. Production—40 pieces per hour. Note—Side and bottom are working points.

OPERATION 15. MILLING LEFT SIDE OVER CUTOFF-SPINDLE HOLE

Transformation—Fig. 301. Machine Used—Whitney Manufacturing Co. hand miller No. 6. Number of Operators per Machine—One. Work-Holding Devices—Work held as in Fig. 303, working from hole and bottom. Tool-Holding Devices—Cutters held in holder, taper hole. Cutting Tools—Form cutter, Fig. 304. Number of Cuts—Two. Cut Data—Speed, 300 r.p.m.; hand feed. Coolant—Compound, ¼-in. stream. Average Life of Tool Between Grindings—200 pieces. Gages—Stand gage and templet, Fig. 305; A, distance gage; B, form gage of finger type. Production—40 pieces per hour. Note—Machining diagram, Fig. 302.

OPERATION CC. REMOVING BURRS AFTER OPERATION 14

Number of Operators—One. Description of Operation—Filing burrs left by cutter. Apparatus and Equipment Used—File and scraper. Production—250 per hr.

OPERATION 17. MARKING BARREL

Transformation—Fig. 306. Number of Operators—One. Description of Operation—Stamping "draw" line on receiver for thread milling to match with that on barrel. Apparatus and Equipment Used—Fixture with stamp, operated by hand lever, Fig. 307. Gages—Gaging from side of lug, Fig. 308; also shown in place at A, Fig. 307. Production—350 per hr. Note—Working points, hole and bottom.

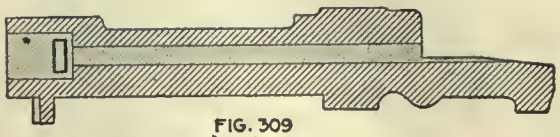

FIG. 309

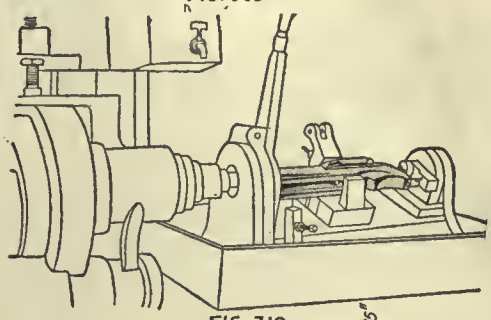

FIG. 310

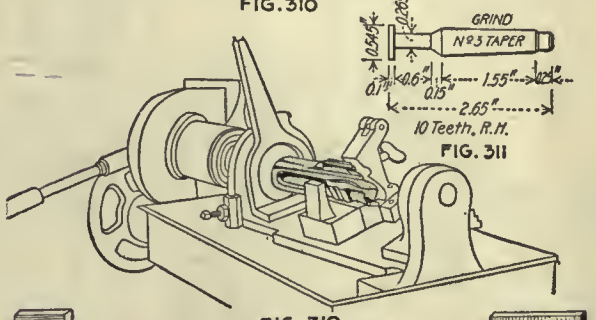

FIG. 311

FIG. 310

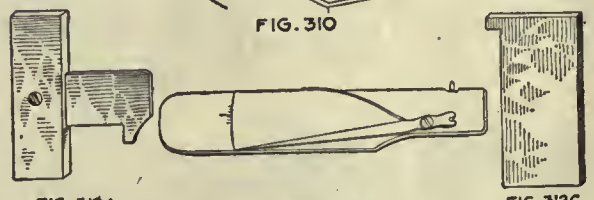

FIG. 312A FIG. 312B FIG. 312C

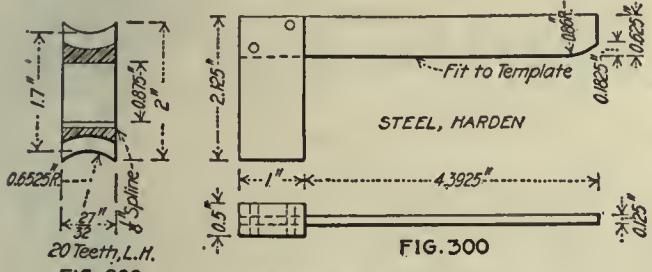

FIG. 299 FIG. 300

OPERATION 14

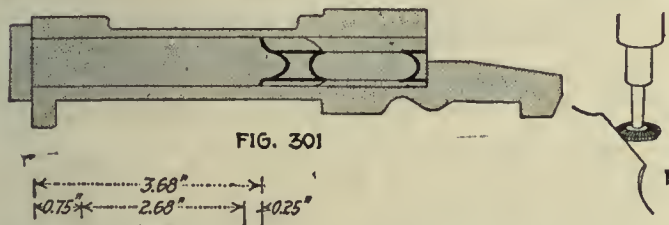

FIG. 301

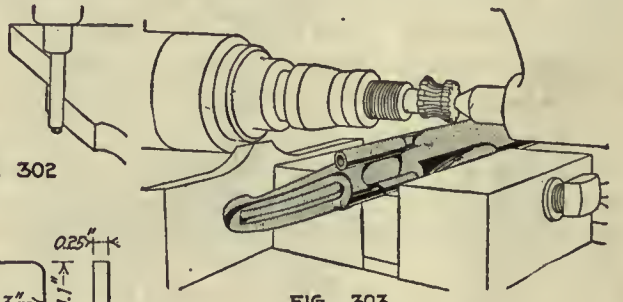

FIG. 302 FIG. 303

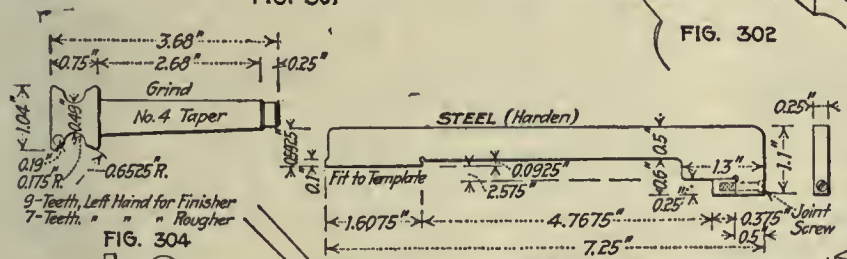

FIG. 304 FIG. 305 A

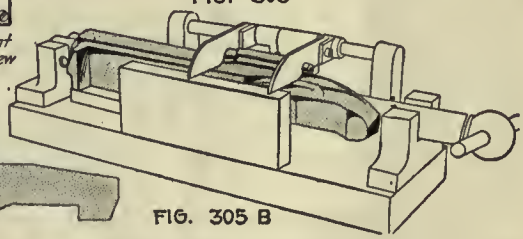

FIG. 305 B

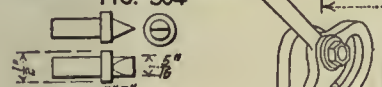

FIG. 307

FIG. 306

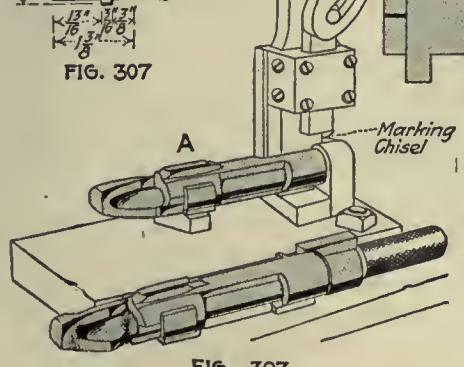

FIG. 307

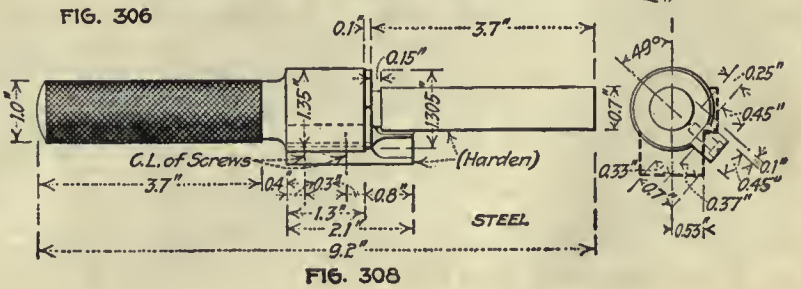

FIG. 308

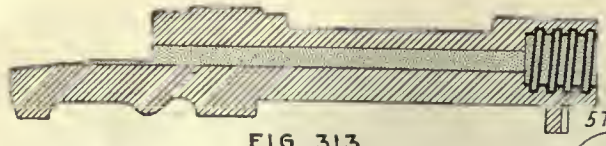

FIG. 313

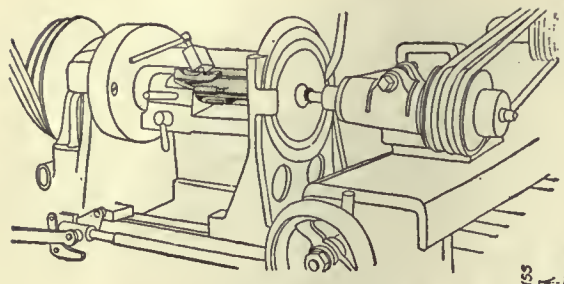

FIG. 314

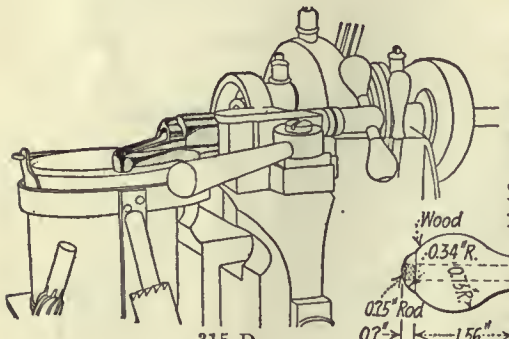

315-D

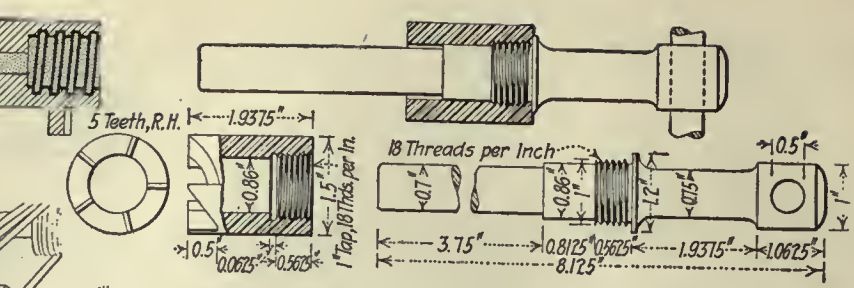

FIG. 315 B

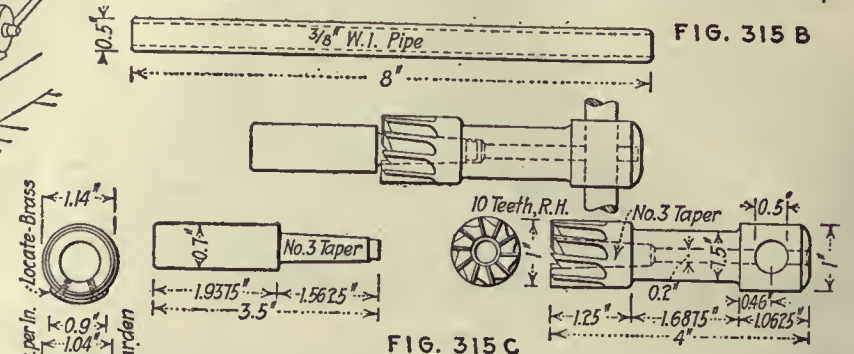

FIG. 315 C

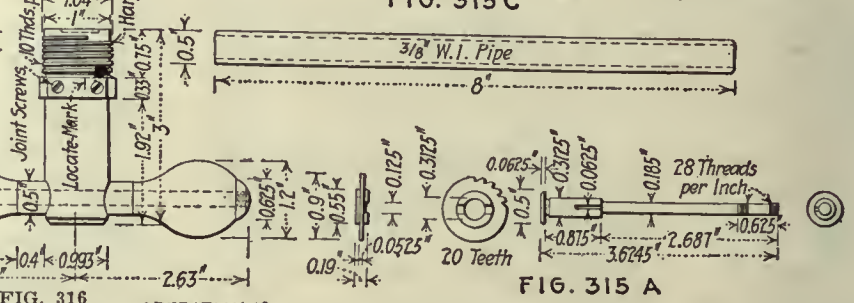

FIG. 315 A

FIG. 316

OPERATION 18

OPERATION 16. HAND MILLING FOR END OF THREAD

Transformation—Fig. 309. Machine Used—Whitney hand miller No. 6. Number of Operators per Machine—One. Work-Holding Devices—Work held in a hand, rotating fixture, Fig. 310. Tool-Holding Devices—Taper shank. Cutting Tools—Taper-shank cutter, Fig. 311. Number of Cuts—One. Cut Data—Speed, 600 r.p.m.; hand feed. Coolant—Cutting oil, ⅛-in. stream. Average Life of Tool Between Grindings—About 200 pieces. Gages—Distance, 0.572 in., Fig. 312-A; depth, Fig. 312-B; width of slot, 312-C. Production—About 100 per hr. Note—Working points, outside of front end and bottom.

OPERATION 18. THREAD MILLING FOR BARREL

Transformation—Fig. 313. Machine Used—Pratt & Whitney 14-in. thread miller. Number of Machines per Operator—Two. Work-Holding Devices—Work held in fixture, using front end and tang as guiding points, Fig. 314; Fig. 315-D shows use for hand reaming, the tools used and the thread gage in place. Tool-Holding Devices—Pratt & Whitney arbor, 315-A. Cutting Tools—Standard thread cutter, Fig. 315-A; hand facing and counterboring tools, Figs. 315-B and 315-C. Fig. 315; A, milling cutter; B, hand facing tool; C, hand counterbore; D, use for handwork and gaging. Number of Cuts—One. Cut Data—30 r.p.m. for the work; cutter, 450 r.p.m. Coolant—Cutting oil, ¼-in. stream. Average Life of Tool Between Grindings—200 pieces. Gages—Plug thread, Fig. 316. Production—35 per hr., two machines. Note—Fig. 315-D also shows plug thread gage in place. The thread is milled with a single cutter to insure an accurate duplication of threads, which is quite necessary to prevent gas leakage.

In manufacturing the Springfield rifle receiver, the Lincoln type miller, the plain miller and the profiler are much in evidence. Some of the operations are performed in fixtures which hold a single receiver while at other times, when the cutting capacity of the machine permits, it will be noted that two receivers are machined at once. Examples of single milling are shown in Figs. 293, 298, 303, 342, 350 and 366. Examples of milling in pairs are not as frequently found in the operations illustrated in this particular section but one good example of this practice is shown in Fig. 318 in which the top of the receiver is being milled to its finished form.

The use of gang milling cutters on the receiver is evident in the illustrations accompanying this article and will be further emphasized as the description proceeds. A good example is shown in Fig. 342 in which the top of tang and overwell are milled to remove the rough stock. The machine used in this case is a Pratt & Whitney No. 3 Lincoln type miller with belt drive. The fixture used to hold the work for this operation is of a type very generally used at the Springfield arsenal and consists of a vise with a sliding jaw actuated by a cam with a handle, the work itself being first accurately set upon an arbor before being gripped in the vise jaws. Sliding-jaw fixtures of this type are not only quick in action and allow the easy removal of the work but also hold the piece rigid against a heavy cut which is particularly essential on roughing operations.

Another case of duplex milling is shown in Fig. 322 which is the set-up for operation 20, milling the underside of the tang. It will be noted that the same type of sliding-jaw vise fixtures is used for this operation.

Among the interesting profiling operations is the one shown in Fig. 327 in which the underside of the tang on the right hand side of the receiver is being profiled. This illustrates another convenient form of holding device, also cam actuated, which has a quick release and also sufficient leverage to resist the comparatively light strain of profiling, although it would probably not have holding power enough if applied to a heavier milling operation.

The thread miller comes into play in cutting the internal thread which fastens the receiver to the rifle barrel. Each operator on this work runs two machines while the work is held in fixtures using the front end and the tang as guiding points. A production of 35 pieces per hour for two machines and one operator is obtained.

Operation 19

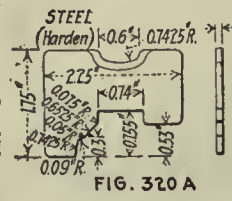

FIG. 320 A

FIG. 317

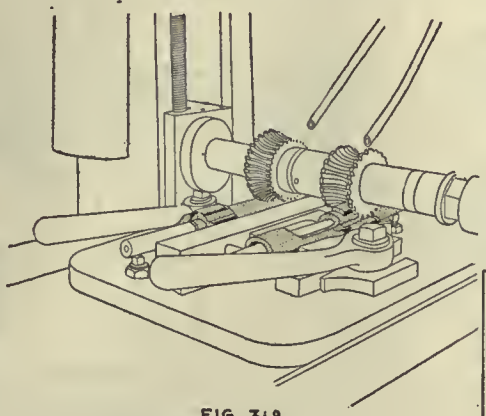
FIG. 318

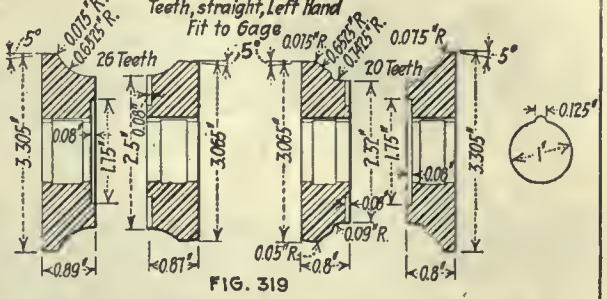

FIG. 319

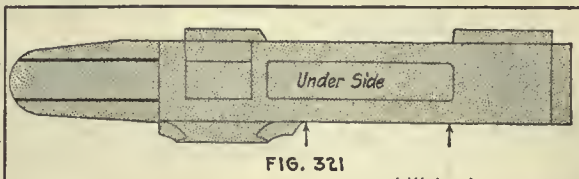

FIG. 321

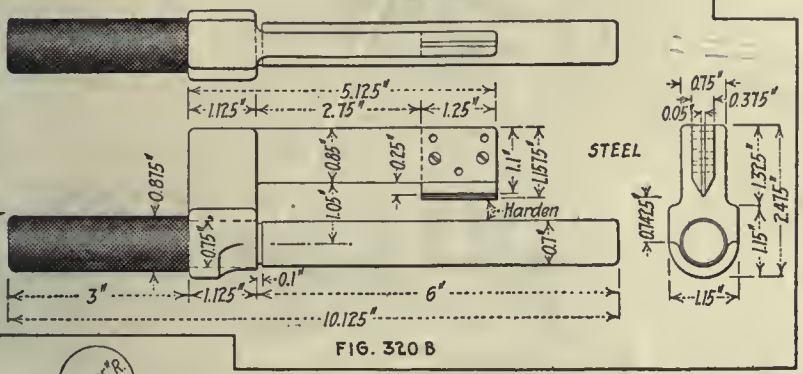

FIG. 320 B

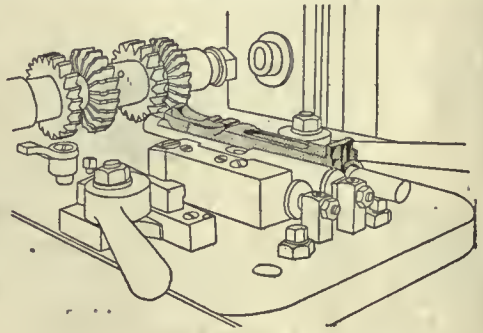
FIG. 322

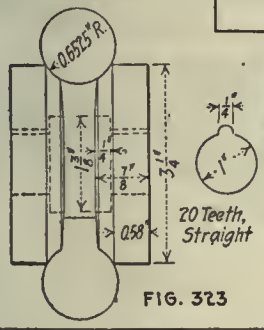

FIG. 323

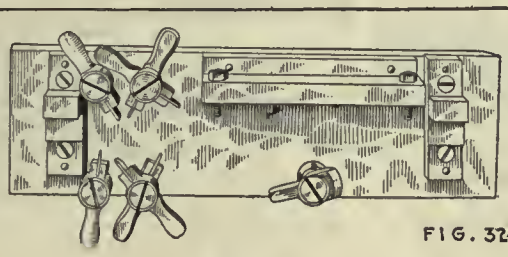
FIG. 324

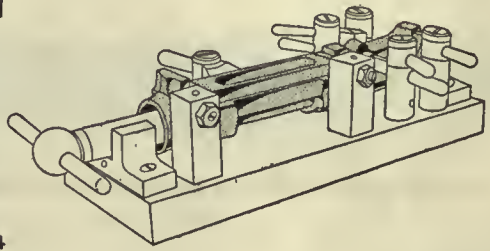

Operation 20

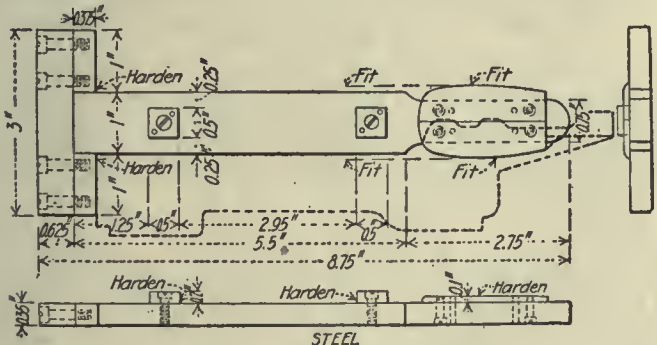

FIG. 329
OPERATION 21

FIG. 325

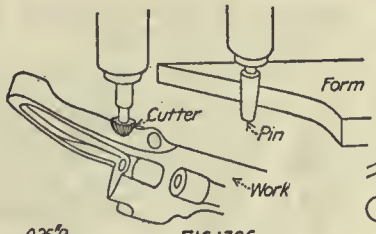

FIG. 326

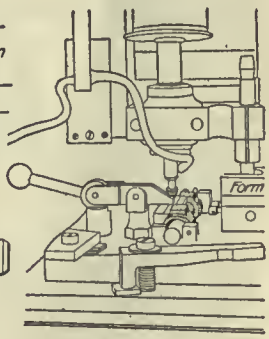

FIG. 327

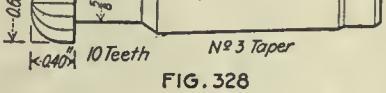

FIG. 328

OPERATION 19. MILLING TOP TO FINISH

Transformation—Fig. 317. Machine Used—Pratt & Whitney No. 2 Lincoln type miller. Number of Operators per Machine—One. Work-Holding Devices—Work held in vise, Fig. 318; working points, hole, bottom and side. Tool-Holding Devices—Cutters held on arbor. Cutting Tools—Form cutters, Fig. 319. Number of Cuts—One. Cut Data—Speed, 60 r.p.m.; ⅝-in. feed. Coolant—Compound, two ¼-in. streams. Average Life of Tool Between Grindings—2,000 pieces. Gages—Fig. 320; A, form of top, front and back; B, diameter, measured from hole. Production—20 per hr. for one machine. Note—One cutter mills the front, the other the back end.

OPERATION 20. MILLING UNDER SIDE OF TANG

Transformation—Fig. 321. Machine Used—Pratt & Whitney Lincoln type miller No. 2. Number of Operators per Machine—One. Work-Holding Devices—Work held in vise, Fig. 322; working points, hole and side. Tool-Holding Devices—Cutter on arbor. Cutting Tools—Forming cutters, Fig. 323. Number of Cuts—One. Cut Data—60 r.p.m.; ⅝-in. feed per minute. Coolant—Compound, ¼-in. stream. Average Life of Tool Between Grindings—4,000 pieces. Gages—Stand, with numerous fingers, Fig. 324. Production—20 per hr.

FIG. 330

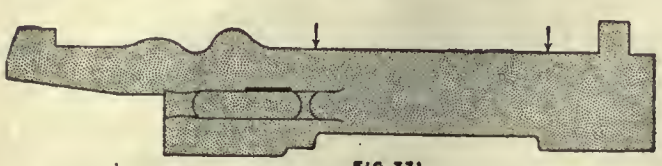

FIG. 334

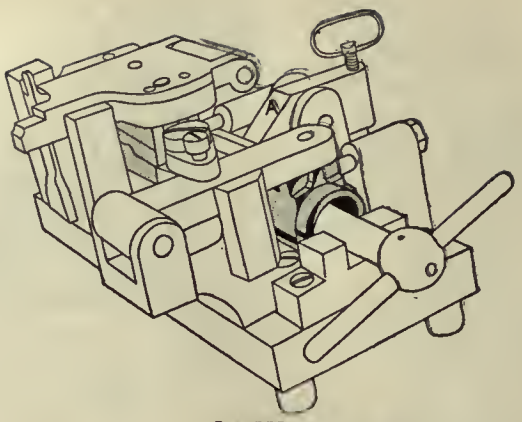

FIG. 335

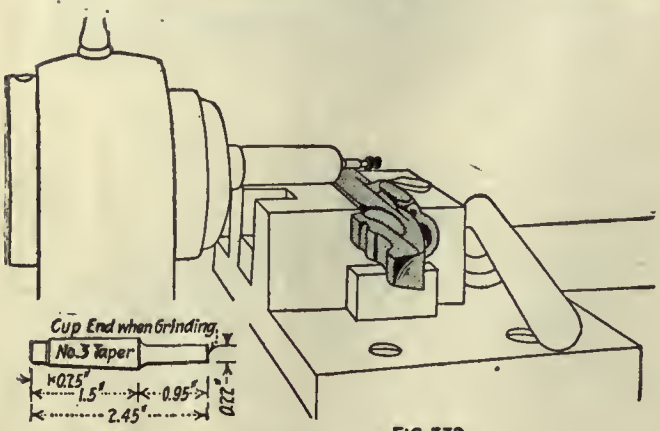

FIG. 333

FIG. 332

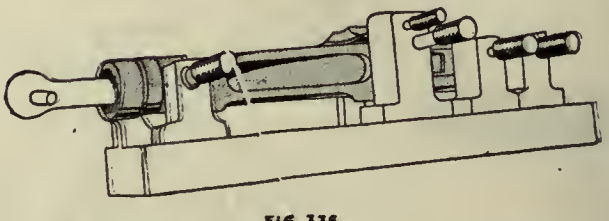

FIG. 336

AA-Guard Screws, B-Sear Nose, C-Rear of Magazine, D-Ejection Pin

FIG. 334

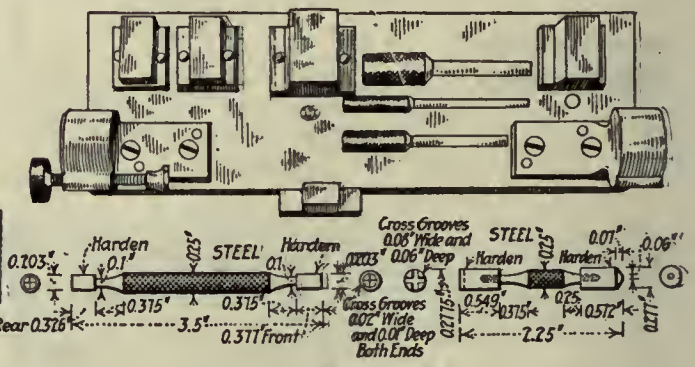

FIG. 337

Operation 22

OPERATION 21. PROFILING UNDER SIDE OF TANG, RIGHT

Transformation—Fig. 325. Machine Used—Pratt & Whitney profiler No. 2. Number of Operators per Machine—One. Work-Holding Devices—Work held on mandrel, clamped in fixture, Fig. 327; note the pivoted, swinging clamp with cam; working points, hole and bottom. Tool-Holding Devices—Taper shank. Cutting Tools—Round-nose profile cutter, right hand, Fig. 328. Number of Cuts—Two. Cut Data—Speed, 1,200 r.p.m.; hand feed. Coolant—Compound, ¼-in. stream. Average Life of Tool Between Grindings—200 pieces. Gages—Form, Fig. 329. Production—65 per hr. Note—Machining diagram, Fig. 326.

OPERATION DD. REMOVING BURRS LEFT BY OPERATION 21

Number of Operators—One. Description of Operation—Filing burrs left on edge after operation 21. Apparatus and Equipment Used—Flat file. Production—300 per hr.

OPERATION 22. PROFILING UNDER SIDE OF TANG, LEFT

Transformation—Fig. 330. Machine Used—Pratt & Whitney profiler No. 2. Number of Operators per Machine—One. Work-Holding Devices—Same as Fig. 327. Tool-Holding Devices—Same as operation 21. Cutting Tools—Two, same as Fig. 328, except left hand. Number of Cuts—One. Cut Data—Speed, 1,200 r.p.m.; hand feed. Coolant—Compound, two ¼-in. streams. Average Life of Tool Between Grindings—200 pieces. Gages—Fig. 329, gages both sides. Production—65 per hr. Note—Machining diagram, reverse of Fig. 326.

OPERATION EE. REMOVING BURRS LEFT BY OPERATION 22

Number of Operators—One. Description of Operation—Filing burrs off tang left by operation 22. Apparatus and Equipment Used—Flat file. Production—300 per hr.

OPERATION FF. HAND MILLING TO REMOVE STOCK FOR OPERATION 23

Transformation—Fig. 331. Machine Used—Brainard hand millier. Number of Operators per Machine—One. Work-Holding Devices—Work held in vise jaws, locating from hole and bottom, Fig. 332. Tool-Holding Devices—Taper shank. Cutting Tools—End mill, Fig. 333. Number of Cuts—One. Cut Data—Speed, 900 r.p.m.; hand feed. Coolant—Cutting oil put on with brush. Average Life of Tool Between Grindings—2,500 pieces. Production—175 per hr. Note—This simply mills a flat spot for starting drill.

OPERATION 23. DRILLING GUARD-SCREW, EJECTOR-PIN AND SEAR-NOSE HOLES

Transformation—Fig. 334. Machine Used—Pratt & Whitney four-spindle upright drilling machine. Number of Operators per Machine—One. Work-Holding Devices—Work held in drill jig, Fig. 335; located by mandrel, held by clamp A; bushings in swinging leaves. Tool-Holding Devices—Drill held in drill chuck. Cutting Tools—Twist drills. Cut Data—400 r.p.m.; hand feed. Coolant—Cutting oil, ⅛-in. stream. Average Life of Tool Between Grindings—From 300 to 400 pieces. Gages—Stand, Fig. 336, and plug, Fig. 337. Production—20 pieces per hr.

The intricate shape of the receiver and the many cuts made upon it conspire to render the design of testing fixtures rather difficult. It is interesting to note the way in which these different things have been overcome and the resulting fixtures which are used in gaging the various out of the way surfaces. A good example of this is shown in Fig. 324 for testing the milling of the underside of the tang and also in Fig. 337 where the alignment of the guard screw, ejector pin and sear nose is tested. It will be noted from the construction of this inspecting fixture or stand that a very slight discrepancy between the centers of these holes may be instantly detected. It should also be noted that the inspection fixtures as far as holding the work is concerned, follow in principle the jig illustrated in Fig. 335 which is a good point to follow in shop practice in general.

This principle is often overlooked, especially in shops where designing of tools and gages is not handled under a central organization. In such cases one man is likely to design the jig or holding fixture for the work and

OPERATION 24. DRILLING SEAR-JOINT PIN HOLE, ETC.

Transformation—Fig. 338. Machine Used—Dwight Slate Co. three-spindle upright drilling machine. Number of Operators per Machine—One. Work-Holding Devices—Work held in drill jig, Figs. 339-A and 339-B, located by mandrel A held against stops B by thumb-screw in swinging clamp C; Fig. 339-B shows jig empty, with mandrel in place. Tool-Holding Devices—Drill chucks. Cutting Tools—Twist drills. Cut Data—Speed, 600 r.p.m.; hand feed. Coolant—Cutting oil, ⅛-in. stream. Average Life of Tool Between Grindings—200 to 400 pieces. Gages—Stand, Fig. 340. Production—35 pieces per hr.

FIG. 338

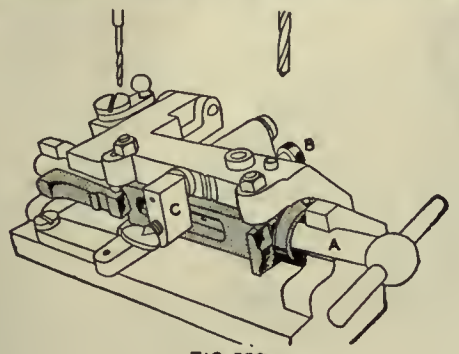

FIG. 339A

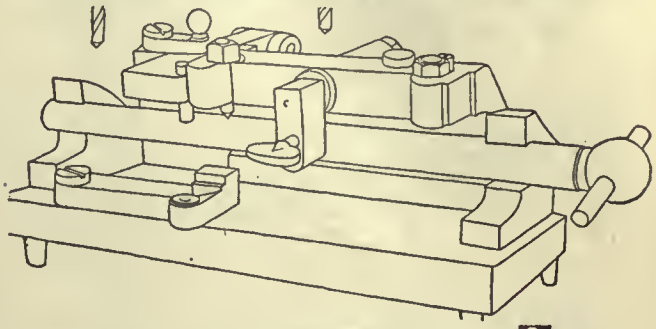

FIG. 339B

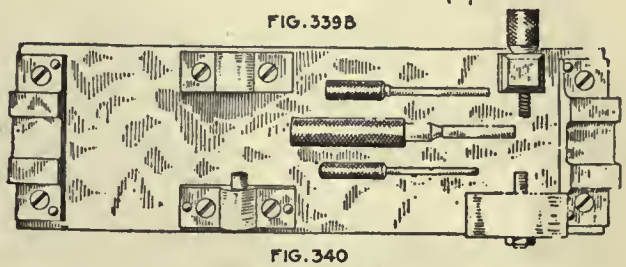

FIG. 340
OPERATION 24

OPERATION GG. BURRING OPERATIONS 23 AND 24

Number of Operators—One. Description of Operation—Scraping burrs left by drill in operations 23 and 24. Apparatus and Equipment Used—File and scraper. Production—300 per hr.

OPERATION 25. MILLING TOP OF TANG AND OVERWELL

Transformation—Fig. 341. Machine Used—Pratt & Whitney No. 3 Lincoln type, belt drive. Number of Machines per Operator—Two. Work-Holding Devices—Special fixture, Fig. 342. Tool-Holding Devices—Cutters held on standard arbor

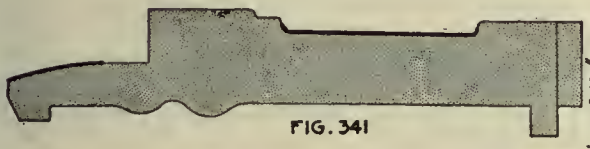

FIG. 341

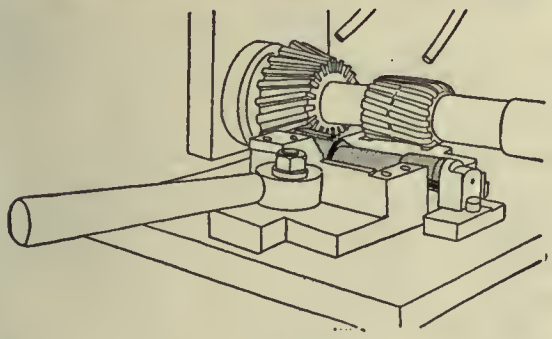

FIG. 342

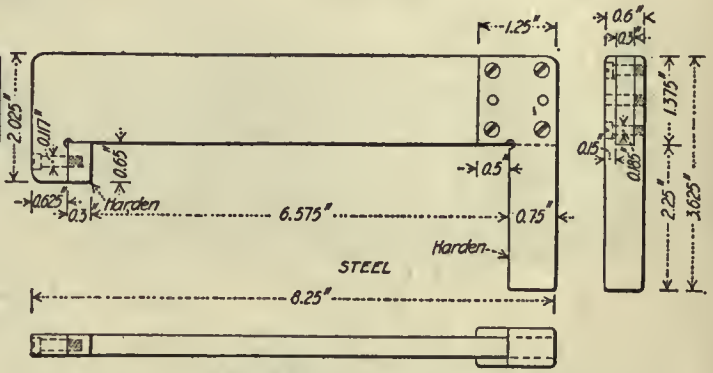

FIG. 344A

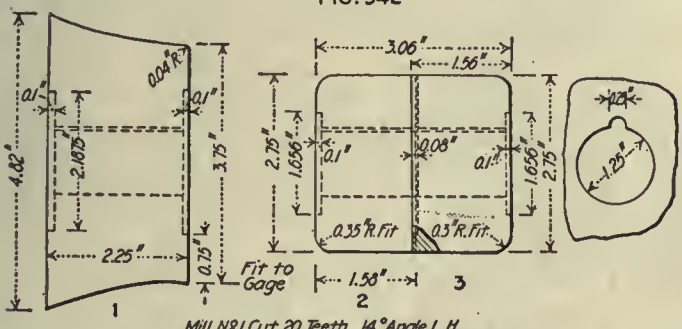

FIG. 343

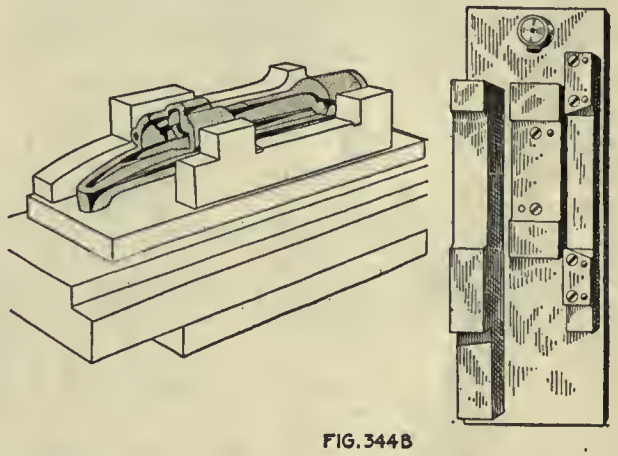

FIG. 344B

OPERATION 25

Cutting Tools—Two form cutters, Fig. 343. Number of Cuts—One. Cut Data—50 r.p.m.; ⅝-in. feed. Coolant—Compound, two ¼-in. streams. Average Life of Tool Between Grindings—1,000 pieces. Gages—Fig. 344; A, rear shoulder from front end; B, contour and sides; use straight-edge resting on side. Production—20 pieces per hr. Note—Working points, side and bottom.

OPERATION HH. REMOVING BURRS LEFT BY OP. 25

Number of Operators—One. Description of Operation—Milling burrs that are thrown up around well in operation 25. Apparatus and Equipment Used—Hand mill with pilot. Gages—None. Production—Burred as they come from operation 25, 40 pieces per hr., two machines.

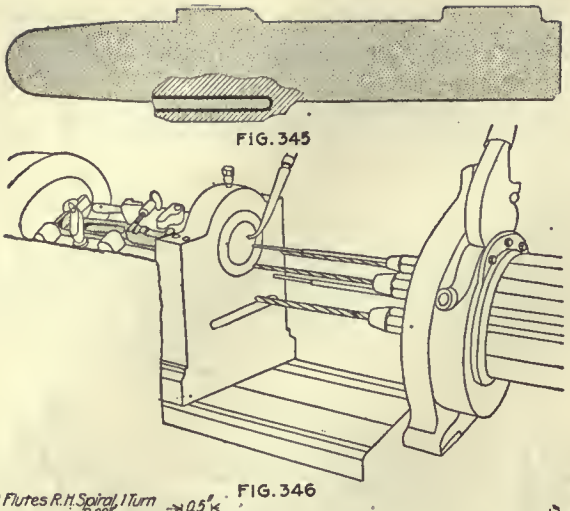

FIG. 345

FIG. 346

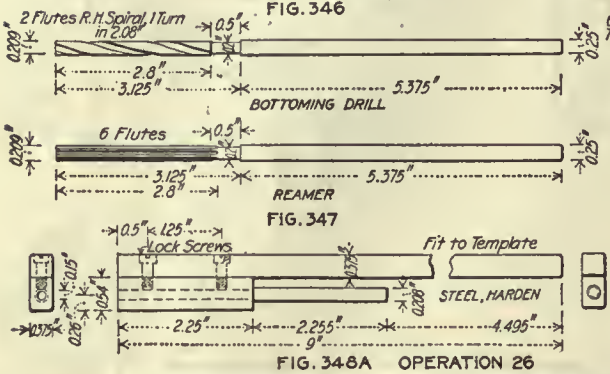

FIG. 347

FIG. 348A OPERATION 26

FIG. 349

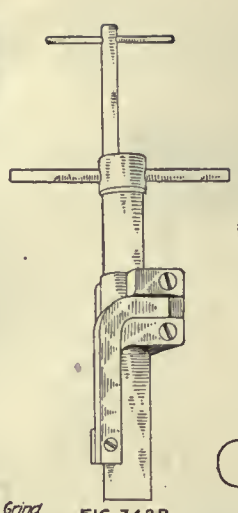

FIG. 348B

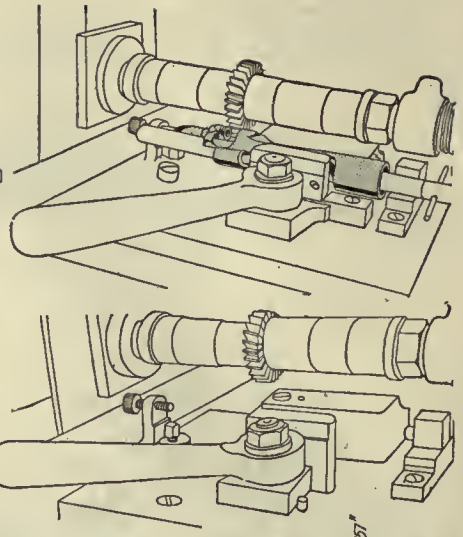

FIG. 350

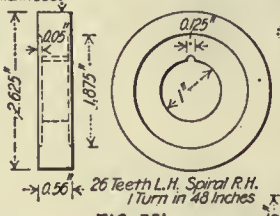

FIG. 351

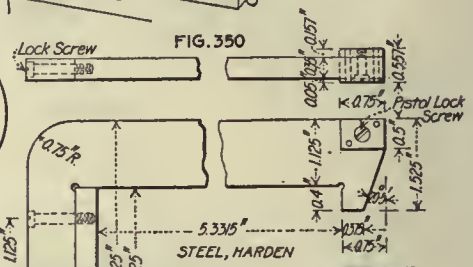

FIG. 352A

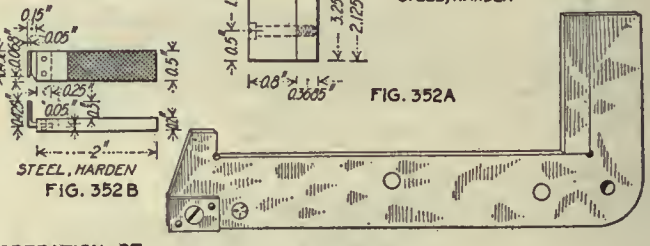

FIG. 352B

OPERATION 27

FIG. 353

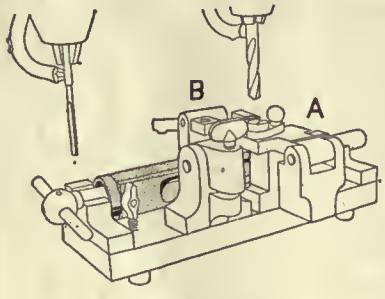

FIG. 354

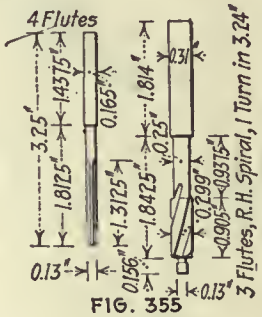

FIG. 355

FIG. 356

Operation 28

OPERATION 26. DRILLING AND REAMING CUTOFF HOLE AND BOTTOMING HOLE

Transformation—Fig. 345. Machine Used—Pratt & Whitney hand screw machine, 16 in. Number of Operators per Machine—One. Work-Holding Devices—Work held in mandrel in fixture bolted to head of machine; Fig. 346 shows general view with details of holding fixture. Tool-Holding Devices—Drills held in chuck in turret of machine. Cutting Tools—One $^{13}/_{64}$ standard twist drill, two $^{13}/_{64}$ in., and reamer 0.209 in., Fig. 347. Number of Cuts—Three. Cut Data—Speed, 60 r.p.m.; hand feed. Coolant—Cutting oil, ¼-in. stream. Average Life of Tool Between Grindings—350 pieces. Gages—Fig. 348; A, depth of hole; B, location with well hole. Production—20 pieces per hr. Note—Working points, bottom and hole; first drill spots hole for following drills.

OPERATION 27. MILLING FOR CUTOFF

Transformation—Fig. 349. Machine Used—Pratt & Whitney No. 2 Lincoln type belt drive. Number of Machines per Operator—Two. Work-Holding Devices—Work held on mandrel, Fig. 350. Tool-Holding Devices—Cutter held on arbor. Cutting Tools—Side-milling cutter, Fig. 351. Number of Cuts—One. Cut Data—Speed, 60 r.p.m.; ⅝-in. feed. Coolant—Compound, ¼-in. stream. Average Life of Tool Between Grindings—1,000 pieces. Gages—Fig. 352; A, length from front end, and width of slot; B, depth of cut from left edge of bottom. Production—40 pieces per hr.

OPERATION 28. DRILLING FOR CUTOFF, REAMING AND COUNTERBORING SEAR-JOINT PIN HOLE

Transformation—Fig. 353. Machine Used—Dwight Slate Co. 16-in. three-spindle upright drilling machine. Number of Operators per Machine—One. Work-Holding Devices—Drill jig, Fig. 354; located by mandrel and right side, held by clamp A and thumb-screw B. Tool-Holding Devices—Drill chuck. Cutting Tools—One twist drill, one reamer and counterbore, Fig. 355. Number of Cuts—Three. Cut Data—Speed, 800 r.p.m.; hand feed. Coolant—Cutting oil, $^{1}/_{8}$-in. stream. Average Life of Tool Between Grindings—140 pieces. Gages—Fig. 356. Production—20 pieces per hr. Note—Drill jig has two leaves with bushings, one for each size hole; one front and one back.

another man, possibly in another department will design the testing fixture for this same piece. Under such circumstances, where the inspection is at all complicated, there is likely to be a large number of rejections due to the springing of the piece in the gaging fixture. If, however, it is held in the same manner in the gaging fixture as it is held in the jig and with about the same amount of pressure on the holding screws, this trouble is largely avoided and rejections will not be as frequent, provided the jig itself is properly made.

OPERATION 29. ROUGH MILLING TO REMOVE STOCK, RIGHT SIDE

Transformation—Fig. 357. Machine Used—Pratt & Whitney No. 2 Lincoln type, belt drive. Number of Operators per Machine—One. Work-Holding Devices—Special vertical fixture, Fig. 358. Tool-Holding Devices—Taper shank. Cutting Tools—End mill, Fig. 359. Number of Cuts—One. Cut Data—Speed, 50 r.p.m.; ⅝-in. feed. Coolant—Compound, ¼-in. stream. Average Life of Tool Between Grindings—1,000 pieces. Gages—Fig. 360. Production—35 pieces per hr. Note—Work held by pilot in front end and sides; located by pilot and bottom.

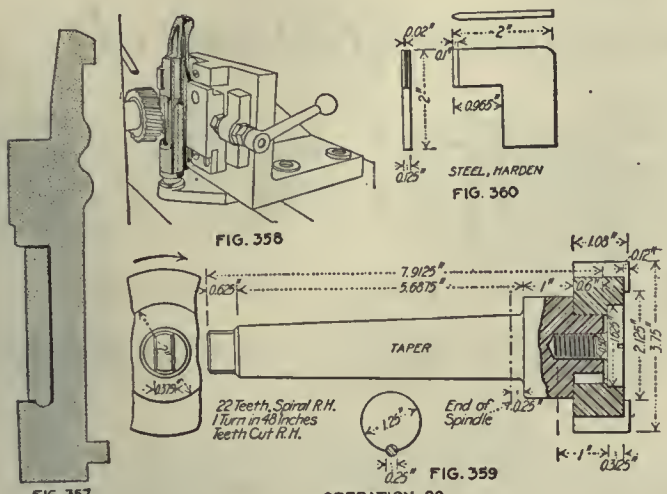

FIG. 358 FIG. 360 FIG. 357 FIG. 359

OPERATION 29

OPERATION 30. MILLING RECEIVER HANDLE SEAT, ROUGHING

Transformation—Fig. 361. Machine Used—Pratt & Whitney No. 2 rebuilt Lincoln type, belt drive. Number of Operators per Machine—One. Work-Holding Devices—Work held in vise clamped to angle plate; located by nose and bottom (Fig. 362); held by clamp A and vise jaws. Tool-Holding Devices—Taper shank. Cutting Tools—End mill, Fig. 363. Number of Cuts—One. Cut Data—Speed, 50 r.p.m.; ⅝-in. feed. Coolant—Compound, ¼-in. stream. Average Life of Tool Between Grindings—1,500 pieces. Gages—Locating, Fig. 364. Production—30 per hr.

OPERATION 31. MILLING REAR OF RECEIVER SAFETY-LUG SLOT

Transformation—Fig. 365. Machine Used—Pratt & Whitney No. 2 Lincoln type, belt drive, rebuilt. Number of Operators per Machine—One. Work-Holding Devices—Work held in special lifting fixture, Fig. 366; pivoted at A; the front end B is raised in the slide shown by means of the cam C, located by sides of receiver. Tool-Holding Devices—Taper shank. Cutting Tools—0.2-in. radius cutter, Fig. 367. Number of Cuts—One. Cut Data—60 r.p.m.; hand feed. Coolant—Compound, ¼-in. stream. Average Life of Tool Between Grindings—1,500 pieces. Gages—Depth, Fig. 368. Production—30 pieces per hr.

OPERATION 11. REMOVING BURRS LEFT BY OPERATIONS 29 AND 30 (REAMING)

Number of Operators—One. Description of Operation—Running hand reamer through well of receiver to remove burrs after operations 29 and 30. Apparatus and Equipment Used—Hand reamer, Fig. 368-A. Production—300 per hr.

FIG. 361

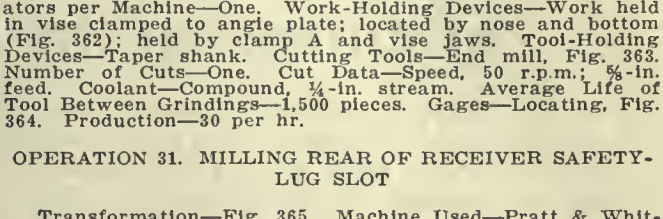

FIG. 365

FIG. 362

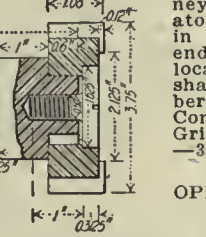

FIG. 363

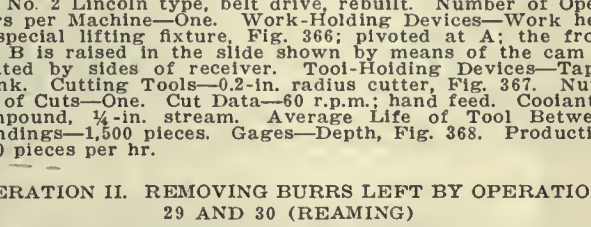

FIG. 366

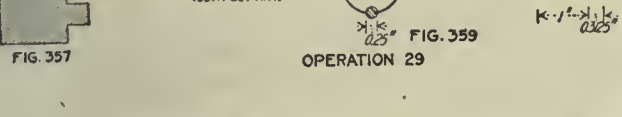

FIG. 363

FIG. 364

Operation 30

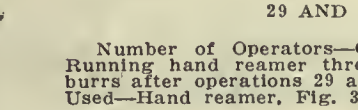

FIG. 367

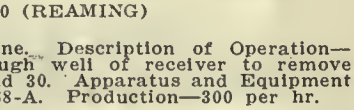

FIG. 368 A

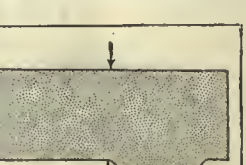

FIG. 368

Operation 31

Operations on the Receiver—(*Continued*)

As the operations progress the receiver requires more and more careful handling in order to avoid mistakes, which would render all the previous work useless. These machinery operations are all accompanied by numerous corresponding gaging operations which should also be helpful in suggesting methods for other classes of work.

The details of the tools used for the shaving operation are clearly shown in Figs. 371, while Fig. 372 shows some of the methods of gaging.

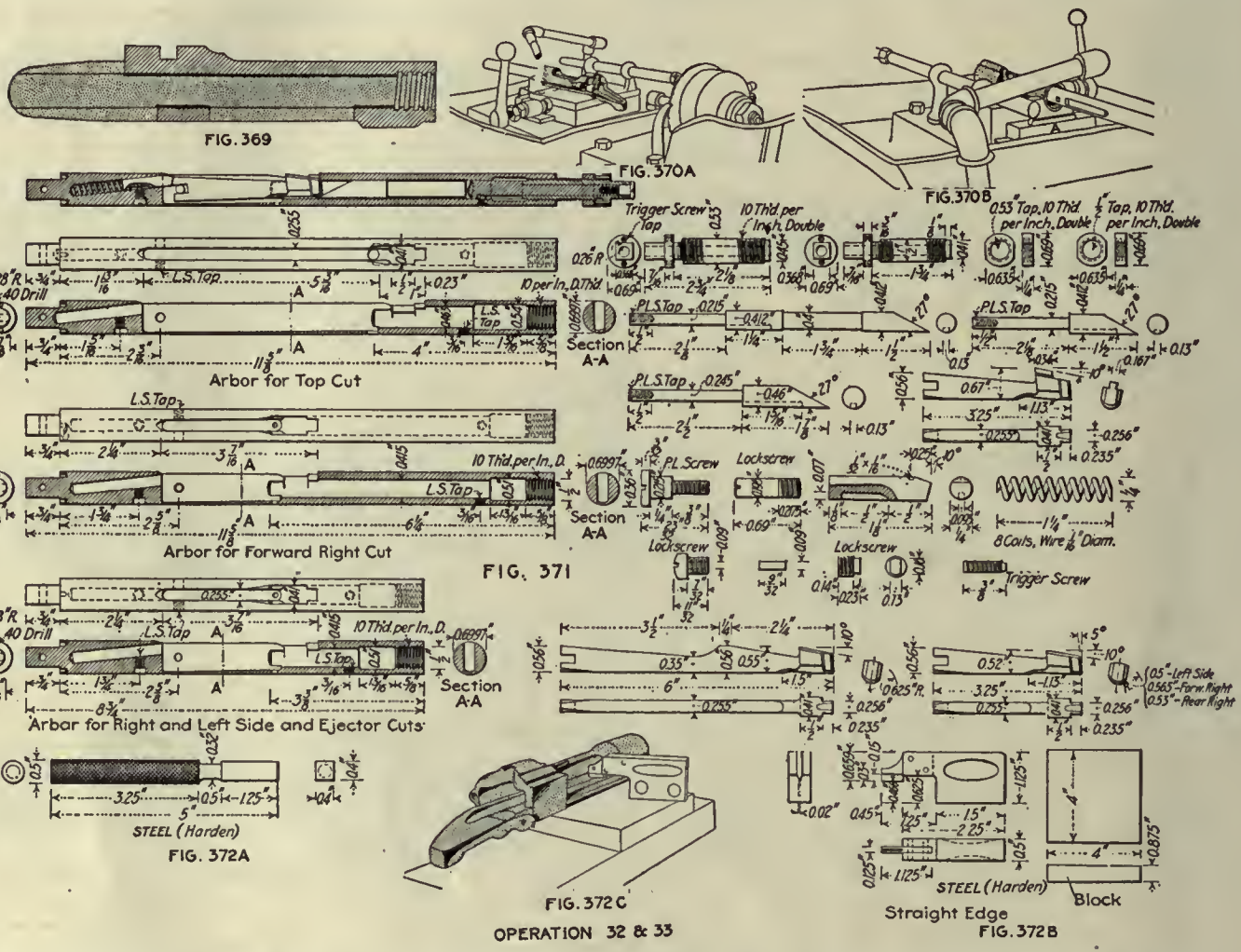

OPERATION 32. SHAVING LEFT LOCKING-LUG SLOT

Transformation—Fig. 369. Machine Used—Horizontal shaving machine, made at the shops. Number of Operators per Machine—One; two barrels at one setting. Work is held on angle plate; held by nose and sides, located against bottom, Fig. 374. Tool-Holding Devices—Threaded arbor. Cutting Tools—Side-milling cutters, Fig. 375. Number of Cuts—One. Cut Data—Speed, 60 r.p.m.; 5/8-in. feed. Coolant—Compound. Average Life of Tool Between Grindings—1,000 pieces. Gages—Fig. 376; A, depth from front end; B, width of slot and location from right side. Production—20 pieces per hr.

OPERATION 33. SHAVING RIGHT LOCKING-LUG SLOT

Transformation—Fig. 369. Machine Used—Horizontal shaving machine made in the shops. Number of Machines per Operator—Two. Work-Holding Devices—Same as Fig. 370-A. Tool-Holding Devices—Same as operation 32. Cutting Tools—Same as Figs. 370-B and 371. Number of Cuts—One. Cut Data—Same as operation 32. Coolant—Cutting oil, 1/8-in. stream. Average Life of Tool Between Grindings—250 pieces. Gages—Same as Fig. 372. Production—20 pieces per hr., two machines.

OPERATION 34. MILLING RECEIVER CLIP SLOT, ROUGHING

Transformation—Fig. 373. Machine Used—Pratt & Whitney No. 2 Lincoln type, belt drive. Number of Machines per Operator—One. Work-Holding Devices—Work held in vise

OPERATION 35. PROFILING TOP OF RIGHT WALL, FRONT AND REAR SHOULDERS AND HANDLE SEAT TO FINISH

Transformation—Fig. 377. Machine Used—Pratt & Whitney profiler No. 2. Number of Operators per Machine—One. Work-Holding Devices—Work held in stud clamped by vise jaws, clamped on sides, located by nose and bottom, Fig. 378. Tool-Holding Devices—Taper shank. Cutting Tools—End-milling cutters, Fig. 380. Number of Cuts—Two. Cut Data—Speed

*Copyright, 1916, Hill Publishing Co.

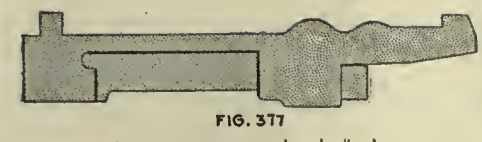

FIG. 377

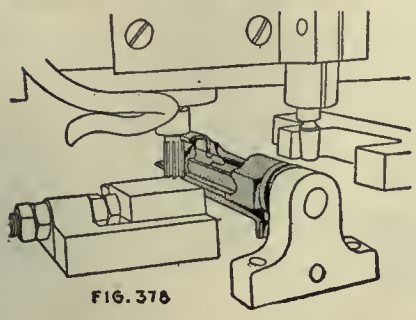

FIG. 378

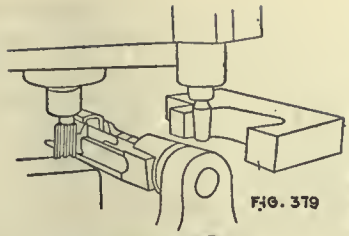

FIG. 379

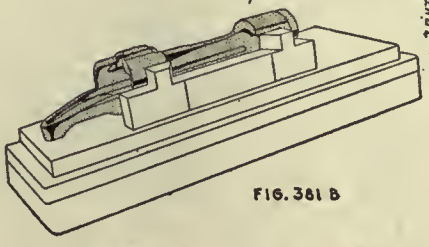

FIG. 381 B

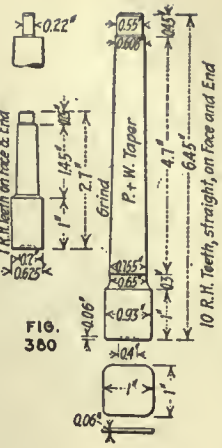

FIG. 380

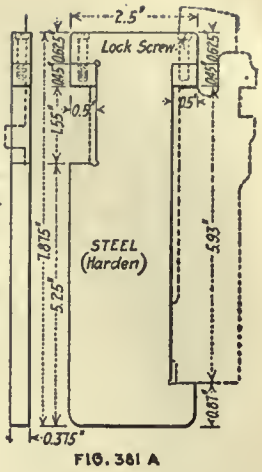

FIG. 381 A

Operation 35

FIG. 382

FIG. 382A

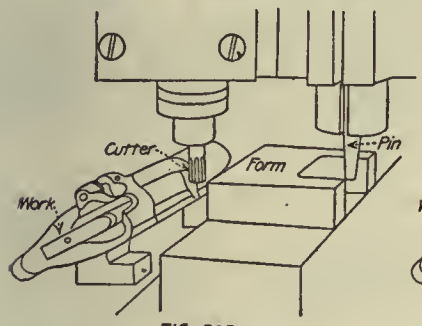

FIG. 383

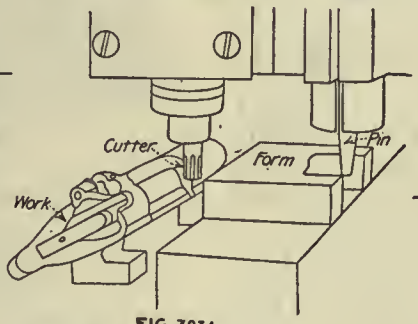

FIG. 383A

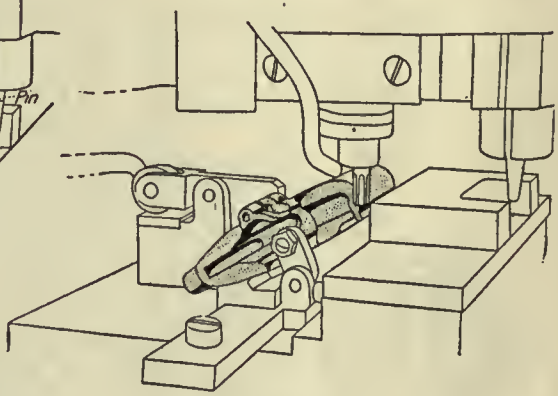

FIG. 384

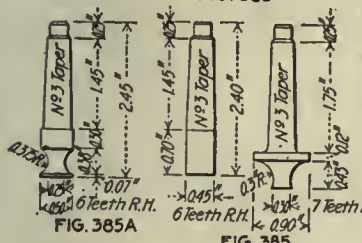

FIG. 385A

FIG. 385

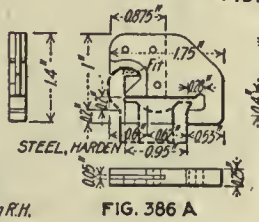

FIG. 386 A

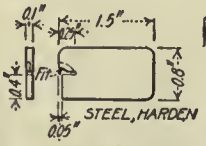

FIG. 386C

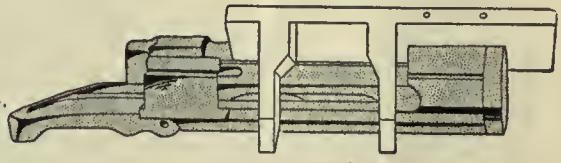

FIG. 386B

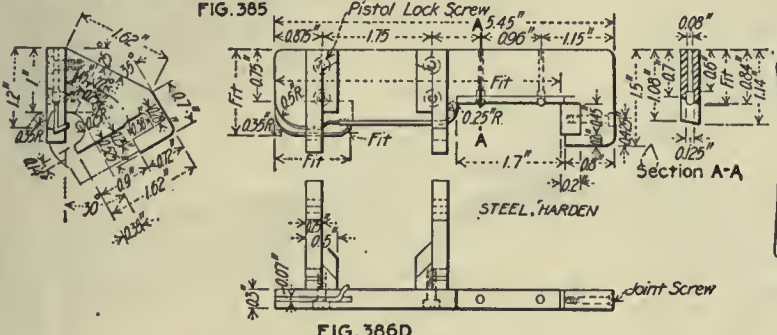

FIG. 386D

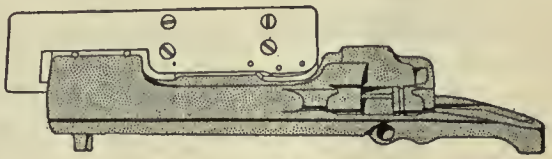

FIG. 386E

OPERATION 36 & 37

1,200 r.p.m.; hand feed. Coolant—Compound. Average Life of Tool Between Grindings—120 pieces. Gages—Fig. 381; A, length and fillet gage; B, height from bottom and location of front and rear shoulders. Production—20 pieces per hr. Note—Machining diagram shown in Fig. 379.

OPERATION JJ. REMOVING BURRS LEFT BY OPERATION 35 (REAMER)

Number of Operators—One. Description of Operation—Filing burrs off top and sides and reaming burrs from hole. Apparatus and Equipment Used—Hand reamer, Fig. 368-A, and file. Production—250 per hr.

OPERATION 36. PROFILING TOP OF LEFT WALL

Transformation—Fig. 382. Machine Used—Pratt & Whitney No. 2 profiler; machining diagram, Fig. 383. Number of Operators per Machine—One. Work-holding Devices—Work held on stud by finger clamp, Fig. 384. Tool-Holding Devices—Taper shank. Cutting Tools—Special milling cutters, Fig. 385. Number of Cuts—Two, one with straight cutter for front end; formed cutter, Fig. 385, for second cut. Cut Data—Speed, 1,200 r.p.m.; hand feed. Coolant—Compound, ¼-in. stream. Average Life of Tool Between Grindings—300 pieces. Gages—Fig. 386; A, position and shape of left wall; B, gage in position. Production—50 pieces per hr.

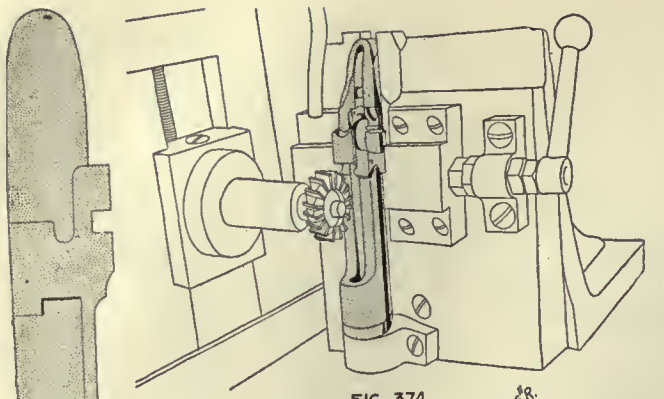

FIG. 374

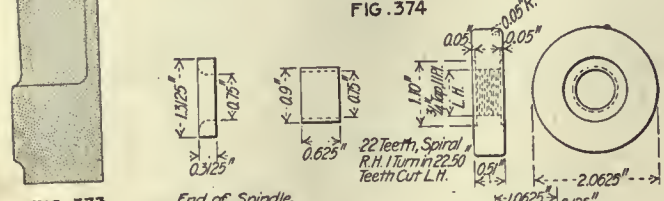

FIG. 373

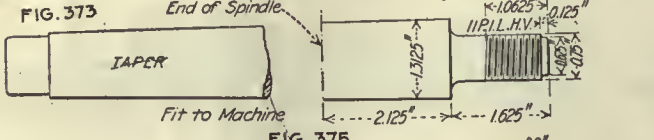

FIG 375

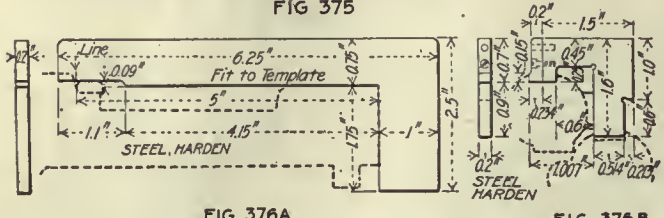

FIG. 376A FIG. 376B

OPERATION 34

OPERATION 37. PROFILING THUMB CUT OVER LEFT WALL

Transformation—Fig. 382-A. Machine Used—Pratt & Whitney profiler; machining diagram, Fig. 383-A. Number of Operators per Machine—One. Work-Holding Devices—Same as Fig. 384. Tool-Holding Devices—Taper shank. Cutting Tools—Special milling cutter, Fig. 385-A. Number of Cuts—One. Cut Data—Speed, 1,200 r.p.m.; hand feed. Coolant—Compound, ¼-in. stream. Average Life of Tool Between Grindings—300 pieces. Gages—Fig. 386; C, shape and location from lug slots; D, location of cut; E, use of gage. Production—60 pieces per hr.

OPERATION 38. SHAVING CLIP SLOT

Transformation—Fig. 387. Machine Used—Bement, Miles Co. slotter, 20-in. table. Number of Operators per Machine—One. Work-Holding Devices—Work held on stud at A, Fig. 388, and between vise jaws B; located by thumb-screw C. Tool-Holding Devices—Tool held in double tool post. Cutting Tools—Shaving tool screwed to holder, high-speed steel, Fig. 389. Cut Data—Speed, 50 strokes per minute; feed, 0.003 in. per stroke; hand feed. Coolant—Cutting oil put on with brush. Average Life of Tool Between Grindings—400 pieces. Gages—Fig. 390; A, width and location from right side; B, distance from front end; plug goes in bore with finger A resting on the right side; finger B is raised to drop in slot, then the end of plug is measured by a straight-edge across the front end of the receiver. Production—40 per hr.

The operations shown herewith involve not only some interesting machinery but also give a further insight into the methods of gaging difficult and intricate work, which have been developed during long years of experience in making the same class of work. The shaving of the locking-lug slots in operations 32 and 33 is done in a special machine using hook cutters which are fed into the work in the same way as the cutters in the rifling machine. The details of this cutter and feeding mechanism are shown in Fig. 371. This shaving might even be called an intermittent broaching; in fact the broaching of such a piece as the receiver at one cut, even with a long broach, would be a difficult problem; both as to holding against the cut and supporting the sides against bulging or springing which would be a very serious drawback indeed.

The measuring of these slots is also of interest, the mandrel, which plays such a part in machining the receiver, being also used in measuring many of the operations performed. In the case of the locking-lug slots the mandrel is first inserted in the hole, then the gage blocks, mounted on handles bent at an angle of about 30 deg., are slid into place beside the mandrel.

OPERATION 39. MILLING CORNERS OF CLIP SLOT

Transformation—Fig. 391. Machine Used—Woodward & Rogers 14-in. three-spindle upright miller. Number of Operators per Machine—One. Work-Holding Devices—Drill jig, Fig. 392; located by front stud and at tang and sides; supported on the bottom; two leaves, A and B, carrying bushings, swing over receiver to guide milling cutter C. Tool-Holding Devices—Drill chuck. Cutting Tools—Special cutter, Fig. 392-A. Number of Cuts—Two. Cut Data—Speed, 600 r.p.m.; hand feed. Coolant—Cutting oil. Average Life of Tool Between Grindings—450 pieces. Gages—Fig. 393, stand gage with hardened plugs in bushings. Production—40 pieces per hr.

OPERATION 40. DRILLING HOLE AT FRONT END OF EJECTOR SLOT

Transformation—Fig. 394. Machine Used—Woodward & Rogers three-spindle upright drilling machine, 14 in. Number of Operators per Machine—One. Work-Holding Devices—Drill jig, Fig. 395, A and B; A, jig empty; B, with work; work is held by jaws A against stop B; swinging stop C; bushing held in D, which slips into well and is held by pin E; arm F clamps it down, and screw G steadies it sidewise. Tool-Holding Device—Drill chuck. Cutting Tools—0.182-in. twist drill, high-speed steel. Number of Cuts—One. Cut Data—600 r.p.m.; hand feed. Coolant—Cutting oil, ⅛-in. stream. Average Life of Tool Between Grindings—400 pieces. Gages—Fig. 396, position from front end. Production—100 pieces per hr.

FIG. 387

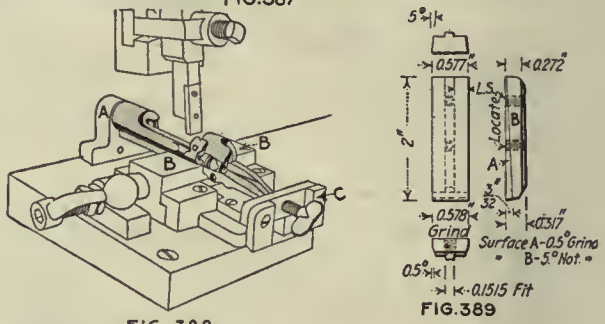

FIG. 388 FIG. 389

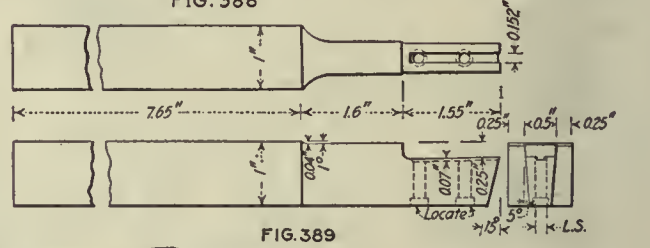

FIG. 389

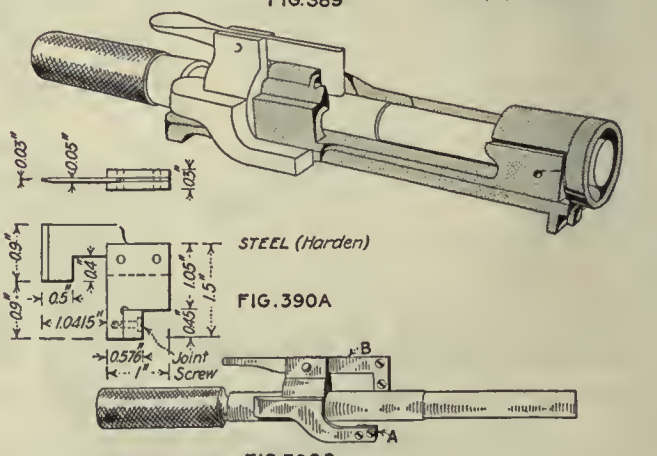

FIG. 390A FIG. 390B

OPERATION 38

The straight-edge is also used to a considerable extent in gaging the various parts. An example of this is shown in Fig. 381-B. Here the bottom of the receiver rests on a steel support and against the side templet shown. This templet is broad enough to steady a straight-edge, which, when laid across it, shows whether the side of the receiver matches the gage or not.

A different type of gage for a somewhat similar purpose is seen in Fig. 386. Here the contour of the other side is being gaged as well as the relation to the lower right side, one of the important gaging points.

This brings up the importance of so planning the progress of work through the shop that points can be established from which to locate work and also as points for gaging. The same points should be maintained through all its operations if possible as there are always opportunities for error in shifting from one to the other. This is of course necessary at times, as in the case of the receiver under consideration, but should be avoided when possible.

In most cases it is necessary to have three working points to the piece, either a hole and one side or two sides at right angles, and one end. The hole makes a good working point as can be seen in this instance, and can in addition be used to advantage for measuring.

FIG. 391

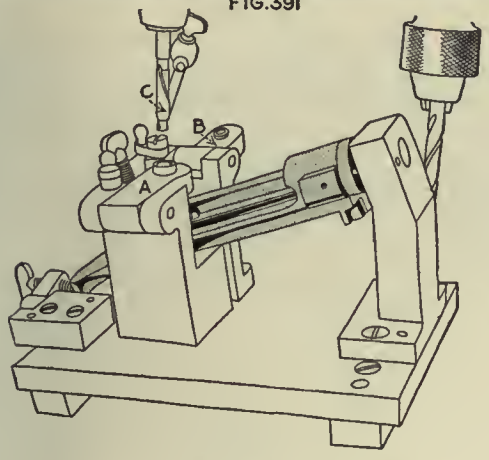

FIG. 392

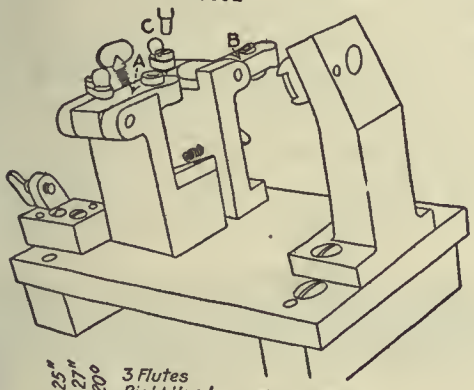

FIG. 392

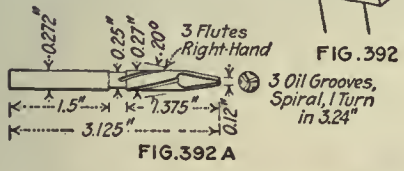

FIG. 392 A

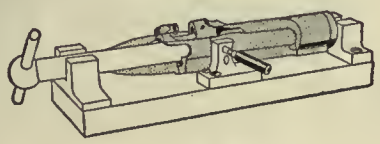

FIG. 393
OPERATION 39

FIG. 394

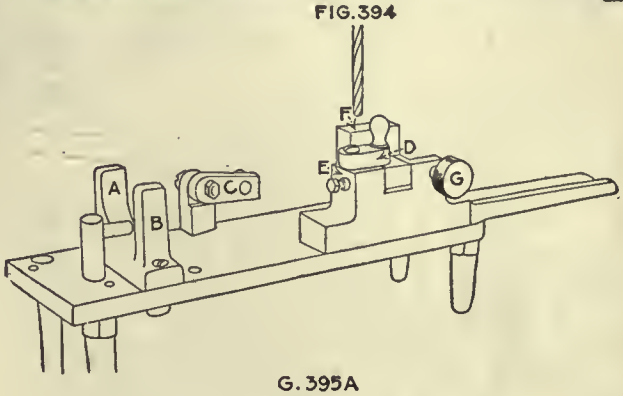

G. 395A

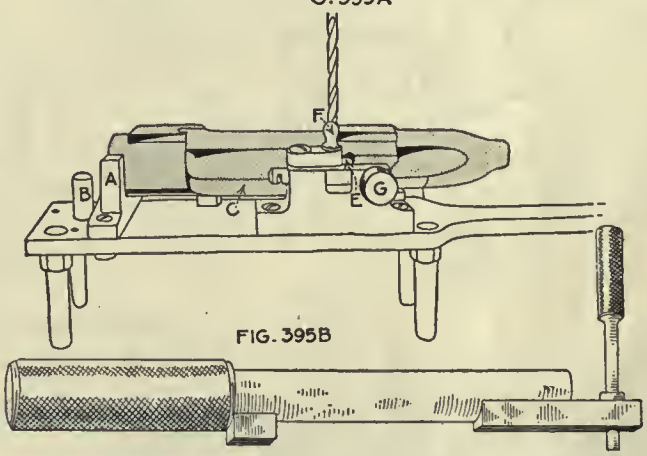

FIG. 395B

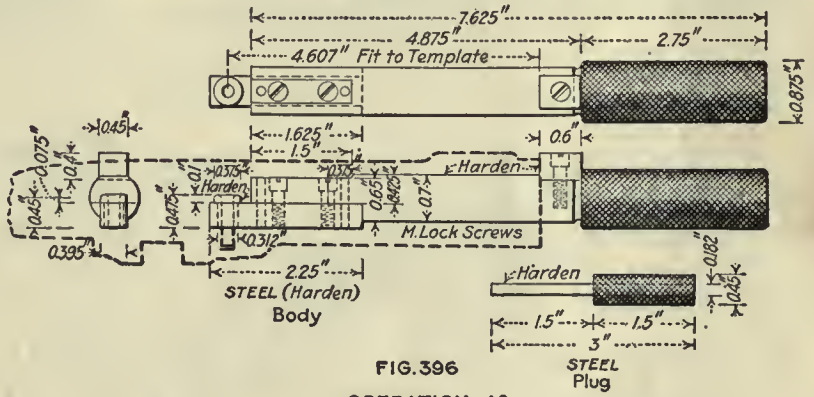

FIG. 396
OPERATION 40

The uses to which the hand milling machine are put in this class of work are full of suggestions that should be applicable to many other lines of work. They show work held in both horizontal and vertical positions as in Figs. 374 and 421. In the latter case, however, the principles of the profiler are applied in a very simple manner. This principle gives almost any desired form

FIG. 397

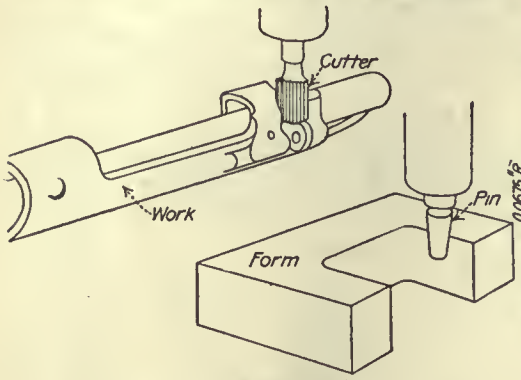

FIG. 397A

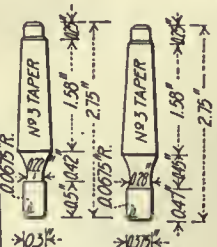

5 Teeth L.H. on Face and End

FIG. 399

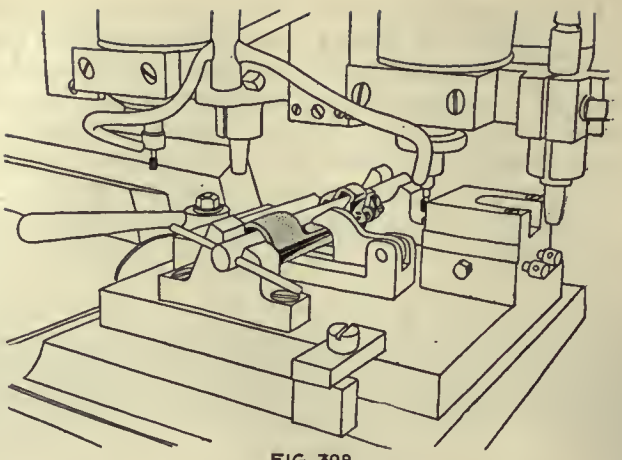

FIG. 398

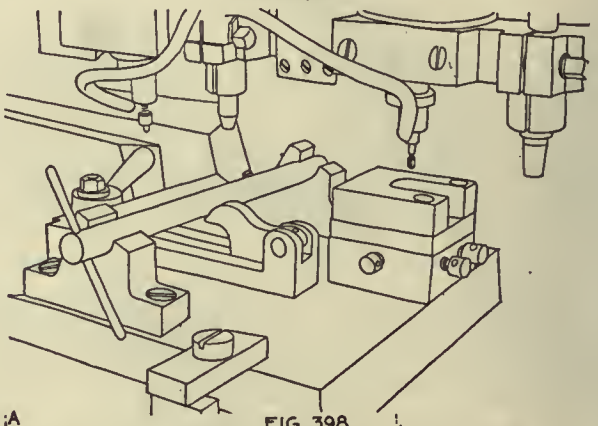

FIG. 398

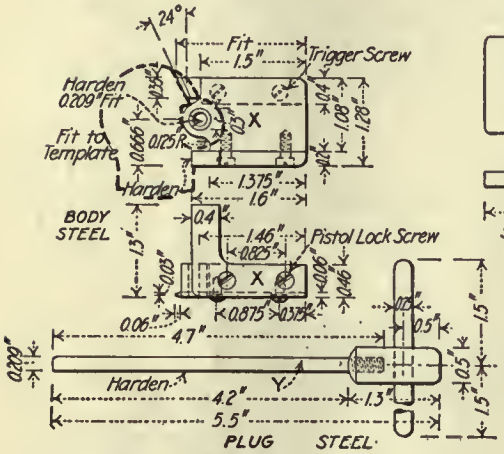

FIG. 400B

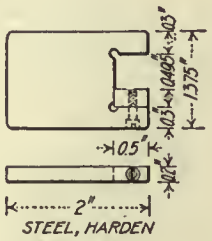

FIG. 400C

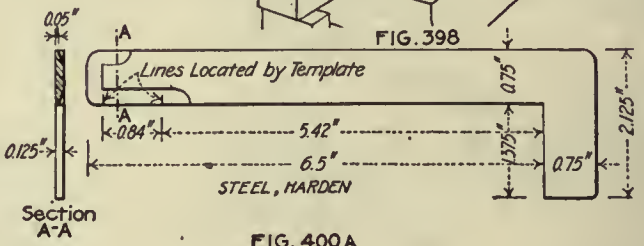

FIG. 400A

OPERATION 43

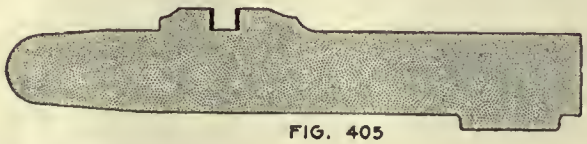

FIG. 405

FIG. 408

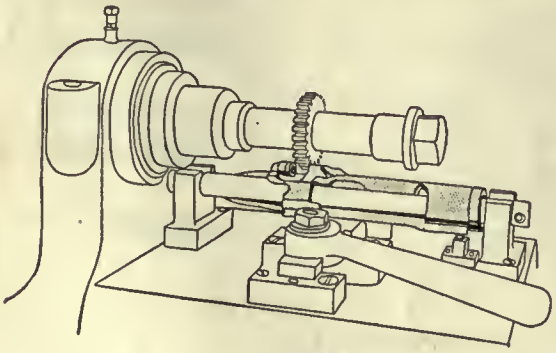

FIG. 406

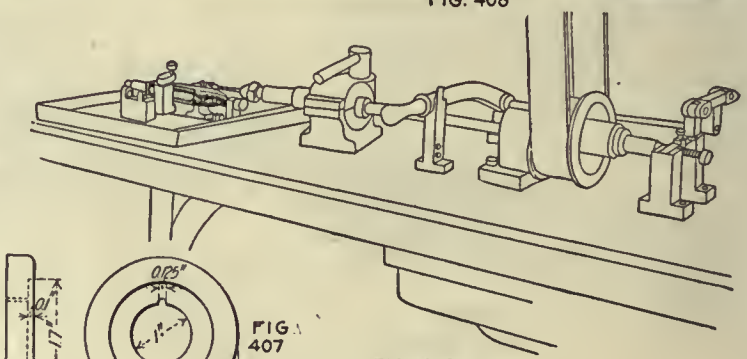

FIG. 409

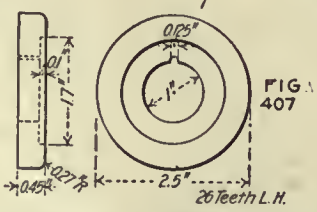

FIG 407

OPERATION 44

OPERATION 43. PROFILING FOR CUTOFF THUMB-PIECE

Transformation—Fig. 397. Machine Used—Pratt & Whitney No. 2 profiler; machining diagram, Fig. 397-A. Number of Operators per Machine—One. Work-Holding Devices—Work held on mandrel clamped by finger clamp, Fig. 398. Tool-Holding Devices—Taper shank. Cutting Tools—¼-in. end mills; two cutters, rough and finish, Fig. 399. Number of Cuts—Two. Cut Data—1,200 r.p.m.; hand feed. Coolant—Compound, two ¼-in. streams. Average Life of Tool Between Grindings—500 pieces. Gages—Fig. 400; A, location from front end; B, depth, measured by putting the body in the cut-off slot and slipping the rod through the gage; C, height. Production—75 pieces per hr.

OPERATION 41. HAND MILLING TOP AND BOTTOM OF CUTOFF CAVITY COMBINED WITH OPERATION 42

Transformation—Fig. 401. Machine Used—Whitney Manufacturing Co. No. 6. Number of Operators per Machine—One. Work-Holding Devices—Rotating fixture, Fig. 402. Tool-Holding Devices—Taper shank. Cutting Tools—Milling cutter, Fig. 403. Number of Cuts—One. Cut Data—Speed, 700 r.p.m.; hand feed. Coolant—Cutting oil, $\frac{1}{8}$-in. stream. Average Life of Tool Between Grindings—1,000 pieces. Gages—Fig. 404; A, bottom of cutoff cavity; B, top of cutoff cavity. Production—100 pieces per hr. Note—Bottom and hole are working points.

OPERATION 44. HAND MILLING TO REMOVE BURRS IN CUTOFF THUMB-PIECE CAVITY

Transformation—Fig. 405. Machine Used—Reed hand miller No. 2. Number of Operators per Machine—One. Work-Holding Devices—Work held on mandrel, held by finger clamp, Fig. 406. Tool-Holding Devices—Cutter arbor. Cutting Tools—Facing mill with one round corner, Fig. 407. Number of Cuts—One. Cut Data—Speed, 360 r.p.m.; hand feed. Coolant—Cutting oil put on with brush. Average Life of Tool Between Grindings—4,000 pieces. Gages—Not gaged till after operation 44½. Production—175 pieces per hr. Note—Right side of receiver is the working point, two pins in bottom plate of fixture locate cut.

OPERATION 44½. MILLING FRONT AND REAR OF CUTOFF CAVITY

Transformation—Fig. 408. Machine Used—Special machine built at Hill shop. Number of Operators per Machine—One. Work-Holding Devices—Work held on mandrel using right side as centering point, Fig. 409. Tool-Holding Devices—Drill chuck. Cutting Tools—Special cutter and special arbor, Fig. 410; pin in cutter locks bayonet joint in arbor; stops on machine determine width of cutoff opening. Number of Cuts—One. Cut Data—70 r.p.m.; hand feed. Coolant—Cutting oil put on with brush. Average Life of Tool Between Grindings—2,000 pieces. Gages—Width, Fig. 411. Production—45 pieces per hr.

OPERATIONS 49½ AND 79. HAND MILLING TO REMOVE STOCK REAR OF SAFETY-LUG SLOT

Transformation—Fig. 412. Machine Used—Garvin No. 3 hand miller. Number of Operators per Machine—One. Work-Holding Devices—Rotating fixture; work held on stud and by tang, supported on bottom, Fig. 413. Tool-Holding Devices—Milling cutter arbor. Cutting Tools—Two milling cutters, Fig. 414. Number of Cuts—One. Cut Data—400 r.p.m.; hand feed. Coolant—Cutting oil, two $\frac{1}{8}$-in. streams. Average Life of Tool Between Grindings—4,000 pieces. Gages—Fig. 415; A, shape and location; B, round corner over clip slot. Production—40 pieces per hr. Note—Working points, bottom and hole of receiver.

OPERATION 45. MILLING TANG

Transformation—Fig. 416. Machine Used—Pratt & Whitney No. 2 belt-drive Lincoln type. Number of Operators per Machine—One. Work-Holding Devices—Vise fixture, Fig. 417; locates by front end and bottom, clamps on sides; fixture raises work to give proper contour, by what is known as "bridge" milling. Tool-Holding Devices—Taper shank. Cutting Tools—One form cutter, Fig. 418. Number of Cuts—One. Cut Data—50 r.p.m.; ½-in. feed. Coolant—Compound, ¼-in. stream. Average Life of Tool Between Grindings—2,000 pieces. Gages—Fig. 419; contour gage with fingers; locates from front end, sides and bottom. Production—40 pieces per hr. Note—Working points, bottom, sides and hole.

FIG 401

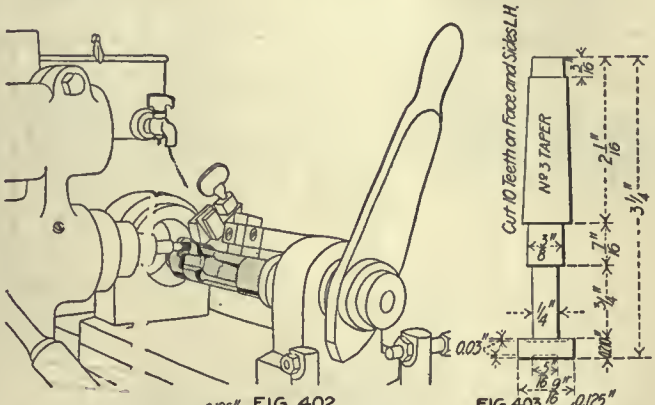

FIG. 402

FIG. 403

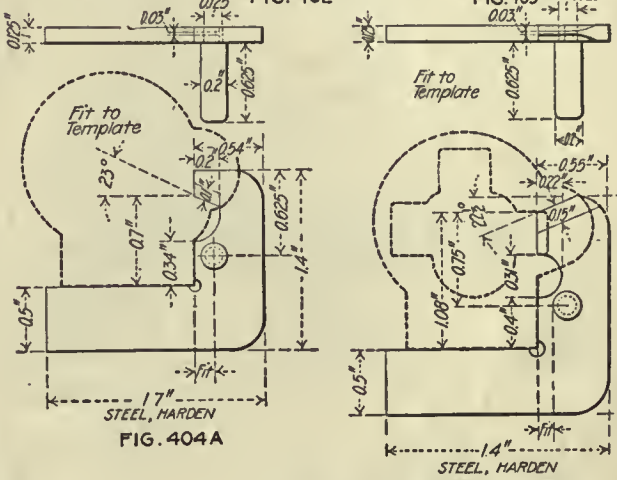

FIG. 404A

FIG. 404B

OPERATION 41

without the use of complicated and expensive formed cutters. It is well worth careful consideration and will often save the use of more expensive machines. The elevating fixture also has its place in this work, operation 45, milling the tang, being an example of this. Here the table is raised as it is fed forward by power, a cam beneath giving the table the proper elevation at each point. In other cases, the fixtures are elevated simply to bring the work against the cutter in the proper position, this being preferred to raising the table of the machine. The weight raised is much less and it is easier to "feel" the stop than where a heavier weight is being handled. A valuable feature is the use of the profiling machine and cutter for securing slots of the desired

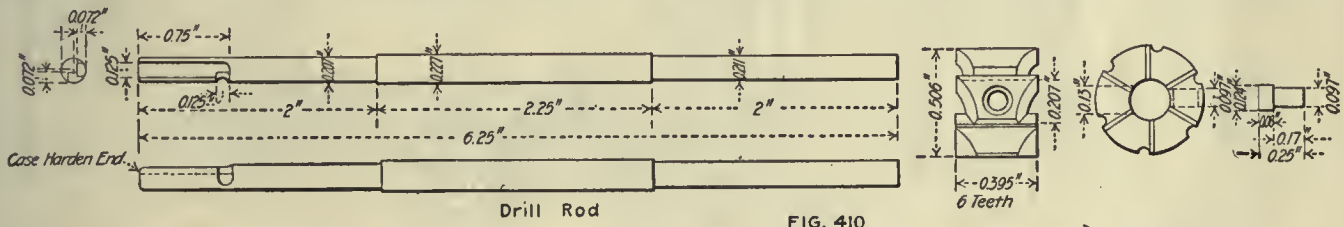

FIG. 410

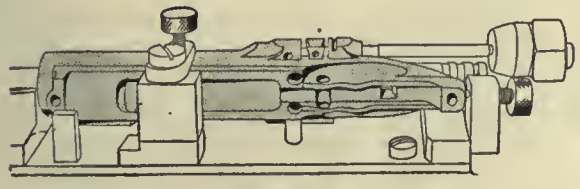

FIG. 410

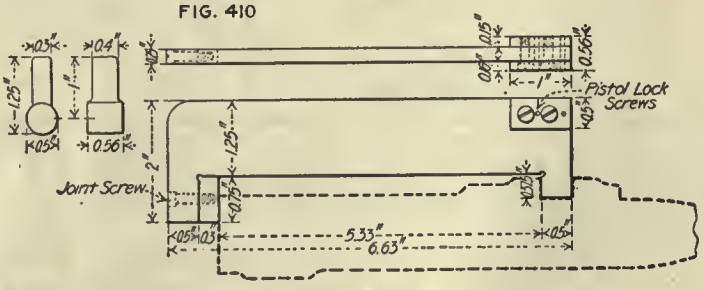

OPERATION 44½

FIG. 411

width, such as the cocking-piece groove shown in operation 51, Figs. 444 and 445. Even where the end of the groove does not need to be rounded as in this case, the use of the profiling cutter and guide makes it possible to secure the desired width with more certainty than with the usual milling cutters. Cutter wear can be easily counteracted by simply moving the taper guiding pin down toward the profiling form, while it is extremely difficult to maintain accuracy in the width of cut with a solid milling cutter.

The numerous filing and burring operations, trivial in themselves, are in reality quite necessary in order to insure correct seating of the part in the next operation, for milling cutters, drills and other cutting tools will throw up burrs and these interfere with properly locating work in a fixture. And this is a big factor in securing accurate and duplicate work.

This, in fact, is one of the "personal" elements which enter into this sort of work and which are too often overlooked in trying to find reasons for new men spoiling work. It also affords a suggestion for fixture designs, pointing out the advantages of so designing fixtures that burrs and similar discrepancies will not affect the location of the work in the fixture.

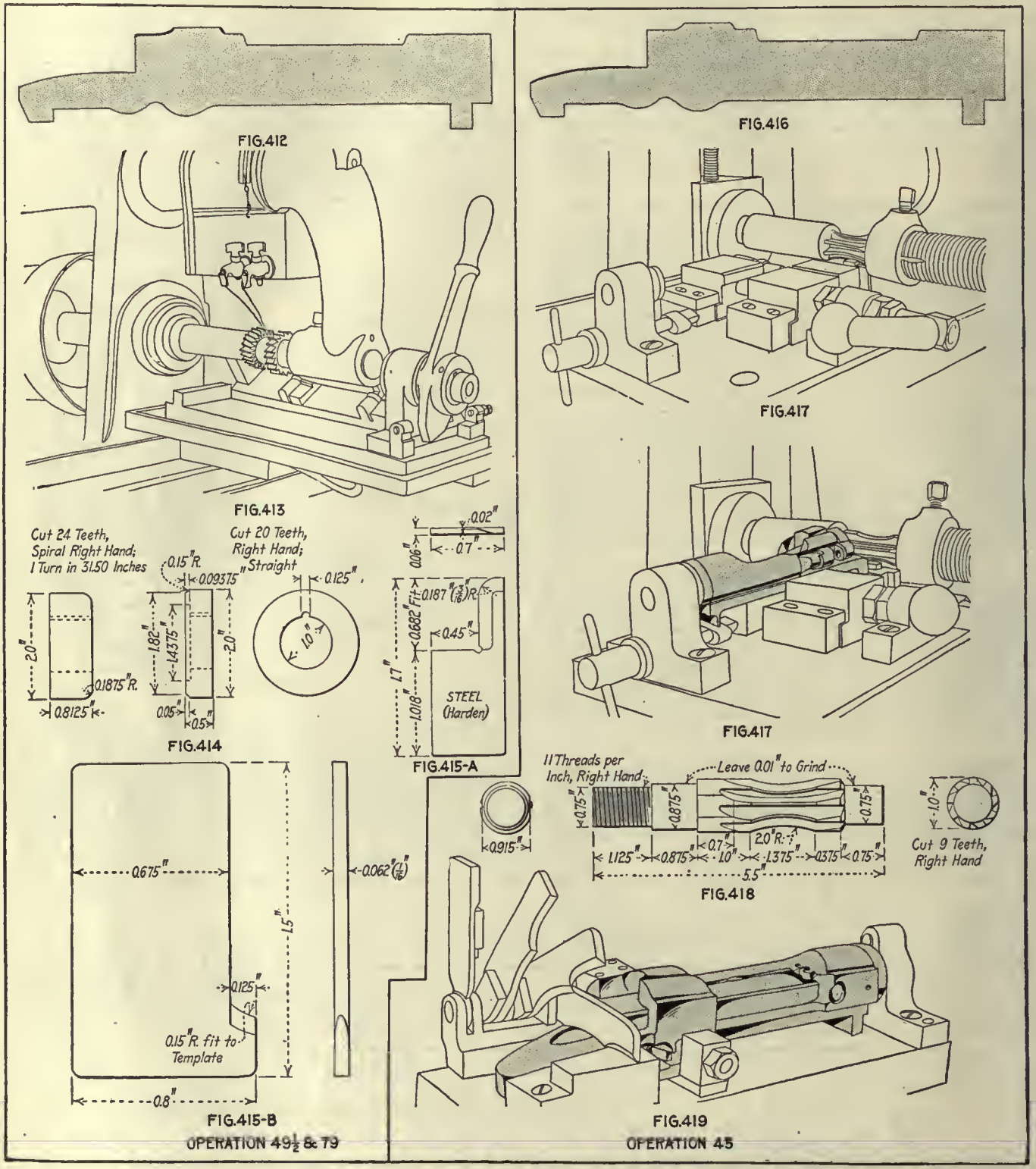

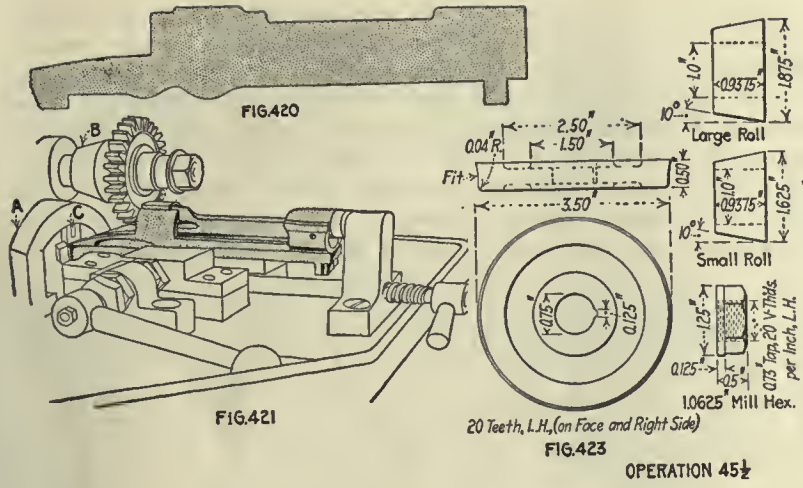

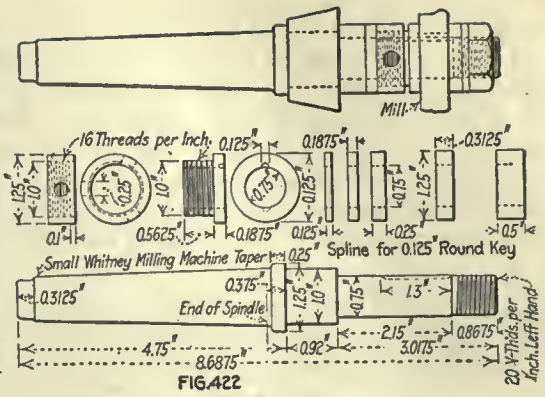

OPERATION 45½

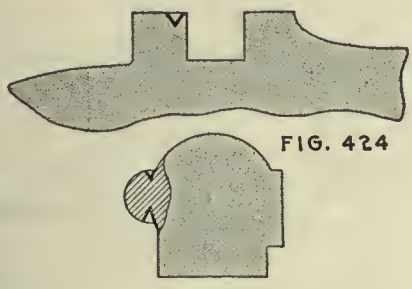

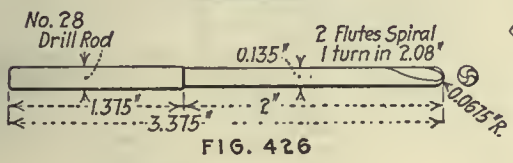

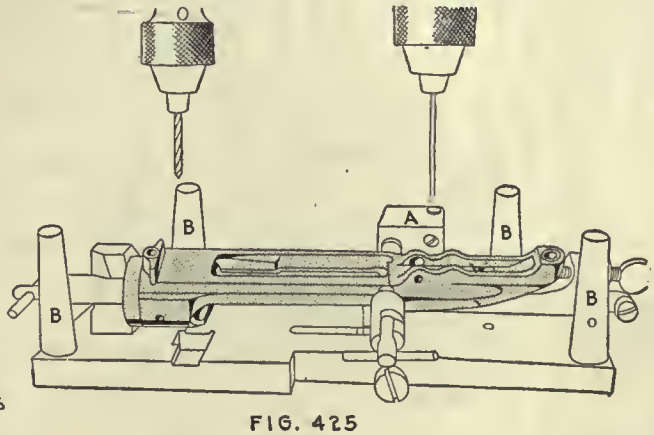

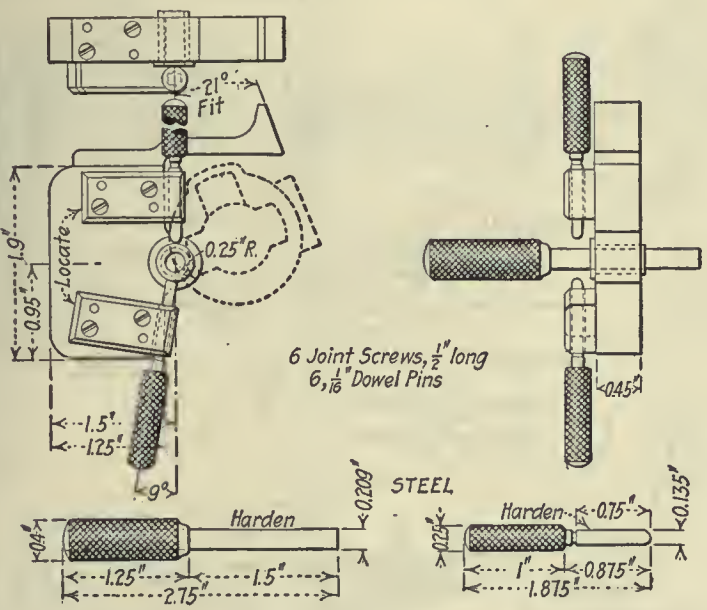

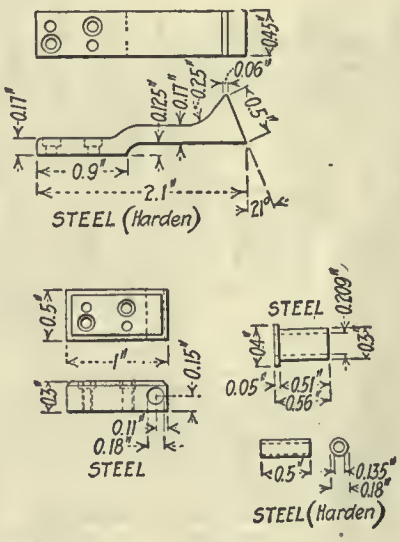

Operation 46

OPERATION 45½. HAND MILLING TO MATCH TOP OF TANG

Transformation—Fig. 420. Machine Used—Whitney Manufacturing Co. No. 6. Number of Operators per Machine—One. Work-Holding Devices—Vise fixture, Fig. 421, with form A to guide roller B and give contour; stop C locates tang. Tool-Holding Devices—Milling arbor, Fig. 422, fitted with roll to guide cutter over the form. Cutting Tools—Formed milling cutter, Fig. 423. Number of Cuts—One. Cut Data—300 r.p.m.; hand feed. Coolant—Cutting oil, ⅛-in. stream. Average Life of Tool Between Grindings—4,000 pieces. Gages—None. Production—175 pieces per hr. Note—Working points are hole and sides of receiver.

OPERATION 46. DRILLING TWO HOLES FOR CUTOFF-SPRING SPINDLE

Transformation—Fig. 424. Machine Used—Woodward 14-in. three-spindle upright drilling machine. Number of Operators per Machine—One. Work-Holding Devices—Drill jig, Fig. 425; bushing in A guides special drill; jig is turned over and rests on legs BBBB to drill other side. Tool-Holding Devices—Drill chuck. Cutting Tools—Round-nose drill, Fig. 426. Number of Cuts—Two. Cut Data—600 r.p.m.; hand feed. Coolant—Cutting oil, ⅛-in. stream. Average Life of Tool Between Grindings—1,000 pieces. Gages—Fig. 427, locates position of holes. Production—60 pieces per hr. Note—Working points, sides and hole.

The shaving operations typified by operation 38 are done on slotters or punch presses. The cutters and cutter holders are made so as to be readily removable and easily kept to size. The feed in such work is something of a problem, owing to the possibility of distortion of the piece, as it is difficult to support the rear of the receiver for this work. This necessitates a very light feed per stroke, about 0.003 to 0.005 in. being found best from all points of view. At 50 strokes per minute, however, the clip slot can be finished at a fair rate of speed. It is gaged from the front end as in many receiver operations. The finger is lifted to allow the gage to be put in place, then the lug is drawn back and front end measured across receiver, instead of gaging from the rear end as might be surmised from the form of the gage. Shaving operations such as these are often the most feasible means of cleaning up out-of-the-way surfaces hard to get at by any other means.

FIG. 428

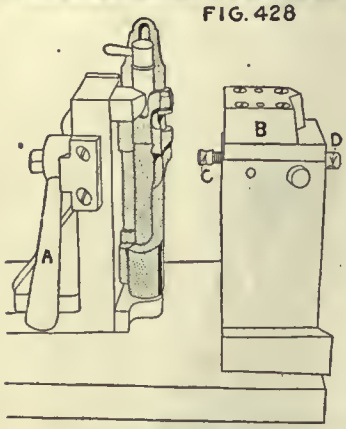

FIG 429

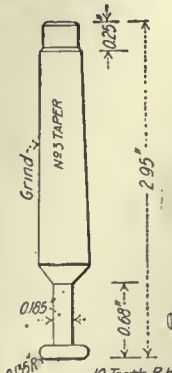

FIG 430

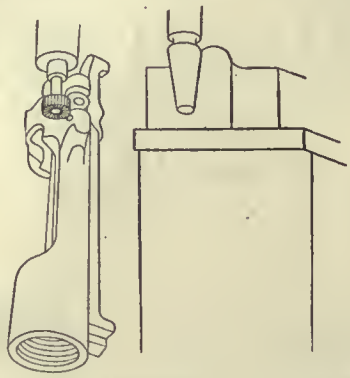

FIG 428A

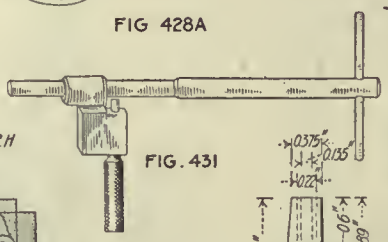

FIG. 431

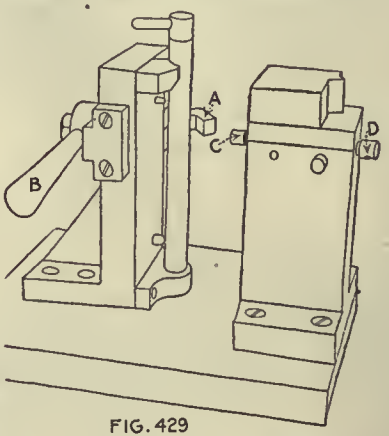

FIG. 429

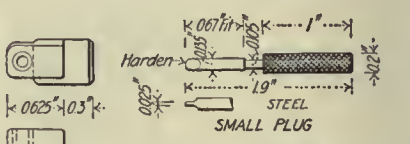

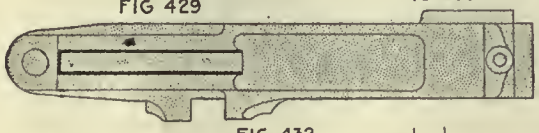

FIG. 432

OPERATION 47

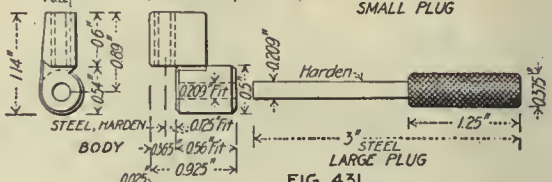

FIG. 431

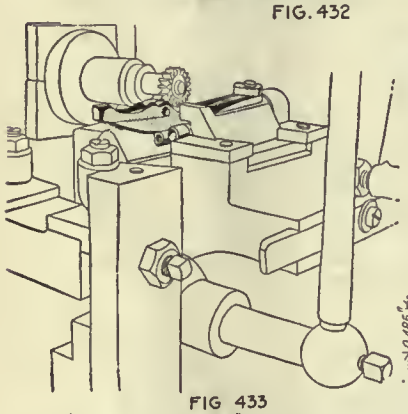

FIG 433

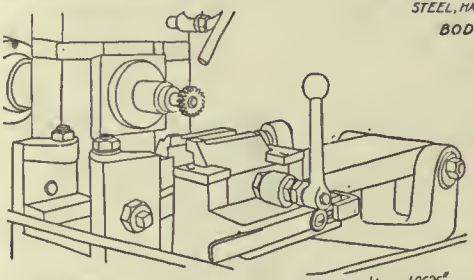

FIG. 433

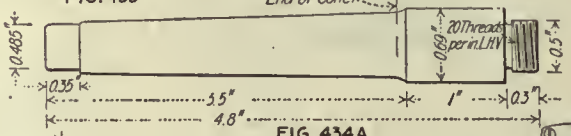

FIG. 434A

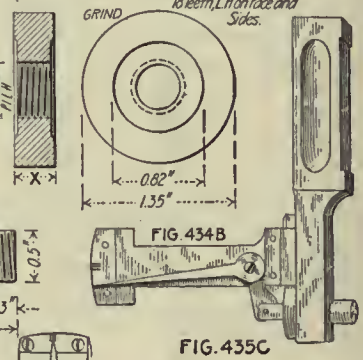

FIG. 434B

FIG. 435C

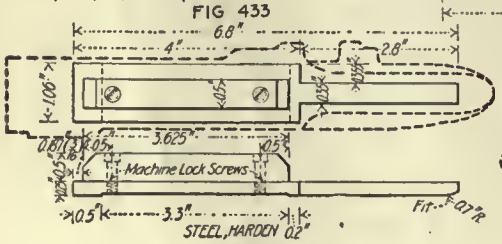

FIG. 435A

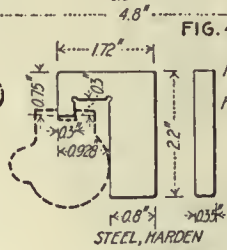

FIG. 435B

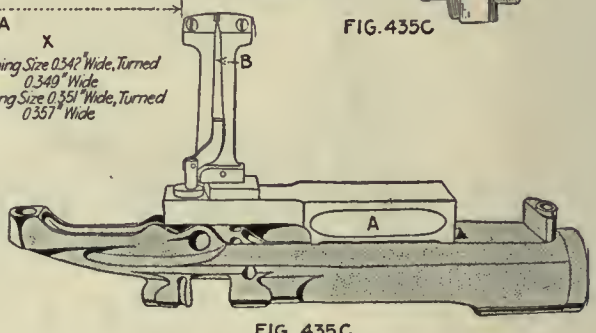

FIG. 435C

OPERATION 48

OPERATION 47. PROFILING GROOVE FOR CUTOFF-SPRING SPINDLE

Transformation—Fig. 428. Machine Used—Pratt & Whitney No. 2 profiler; machine diagram, 428-A. Number of Operators per Machine—One. Work-Holding Devices—Held on vertical mandrel by finger clamp, operated by lever A, Fig. 429; the profiling form B is adjustable by screws C and D. Tool-Holding Devices—Taper shank. Cutting Tools—Round-edge milling cutter, Fig. 430. Number of Cuts—One. Cut Data—1,200 r.p.m.; hand feed. Coolant—Compound, ¼-in. stream. Average Life of Tool Between Grindings—300 pieces. Gages—Fig. 431. Production—80 pieces per hr. Note—Working points, hole, front end and right side.

OPERATION 48. MILLING SEAR SLOT, ROUGH ON RECEIVER

Transformation—Fig. 432. Machine Used—Pratt & Whitney No. 2 Lincoln type miller. Number of Machines per Operator—Two. Work-Holding Devices—Held on stud at front end, vise jaws and plug at rear end, Fig. 433; fixture raises work against cutter, as in Fig. 366. Tool-Holding Devices—Taper shank, Fig. 434-A. Cutting Tools—Side-milling cutter, Fig. 434-B. Number of Cuts—One. Cut Data—Speed, 70 r.p.m.; ⅝-in. feed. Coolant—Compound, ¼-in. stream. Average Life of Tool Between Grindings—2,000 pieces. Gages—None. Production—20 pieces per hr. per machine. Note—This is an example of the use of a fixture with auxiliary feed.

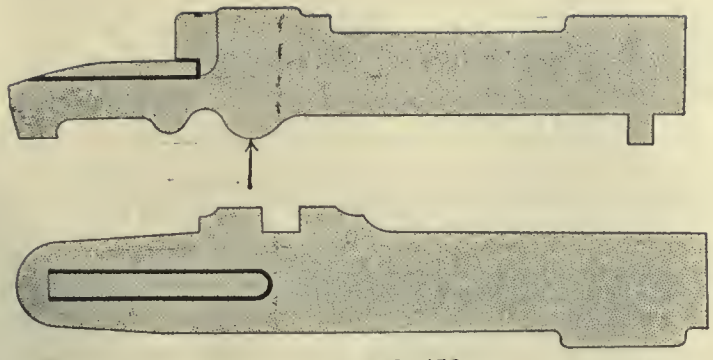

FIG. 436

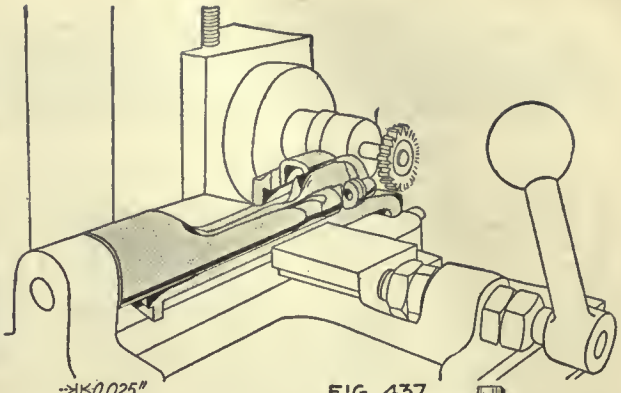

FIG. 437

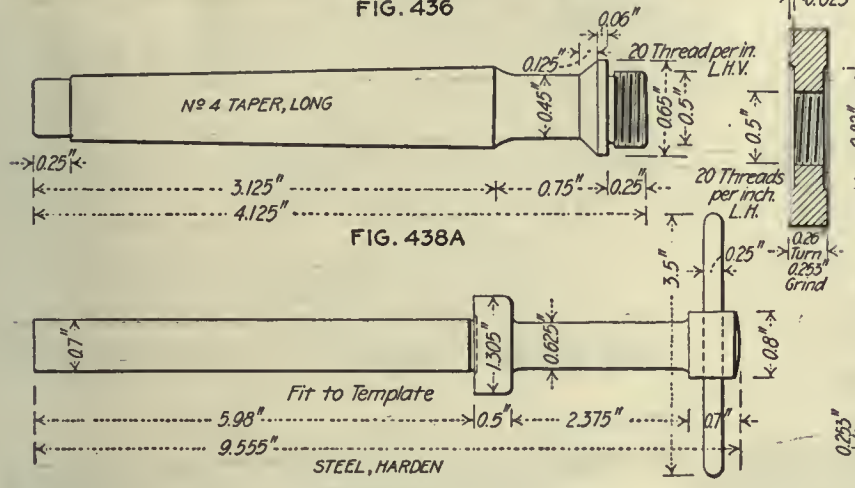

FIG. 438A

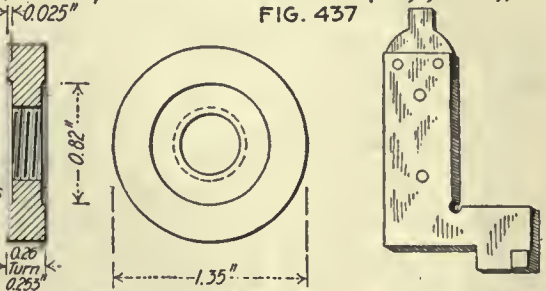

FIG. 438B.

FIG. 439A

FIG. 439A

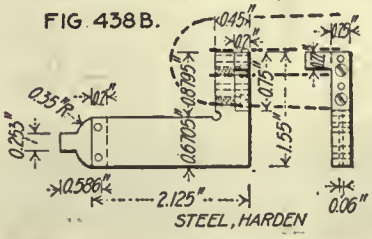

FIG. 439B

OPERATION 49

FIG. 444

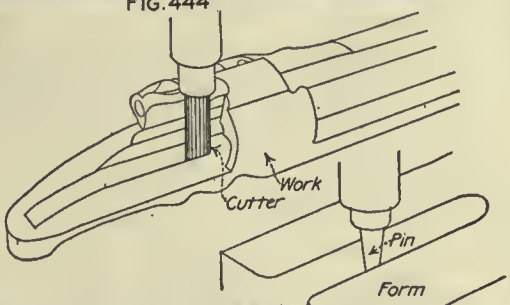

FIG. 444A

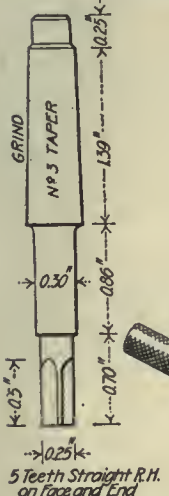

5 Teeth Straight R.H. on Face and End

FIG. 446

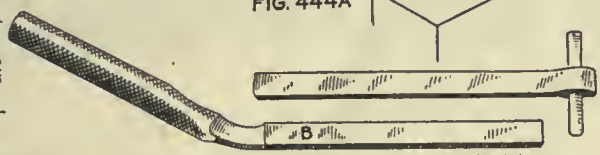

FIG. 447

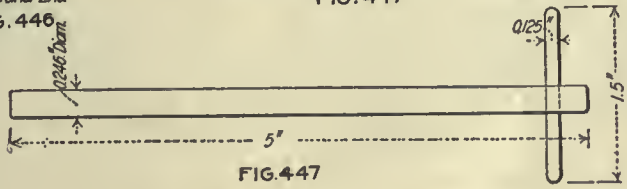

FIG. 447

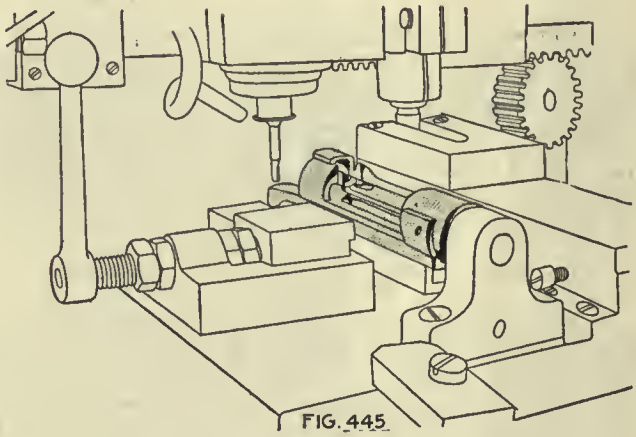

FIG. 445

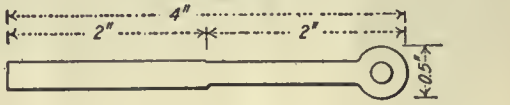

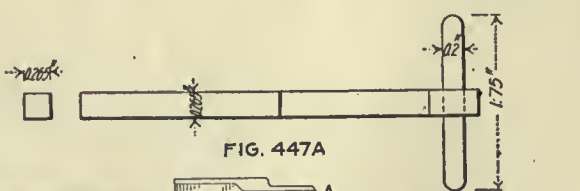

FIG. 447A

FIG. 447C

OPERATION 51

FIG. 440

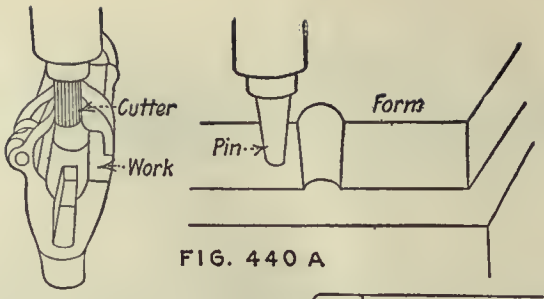

FIG. 440 A

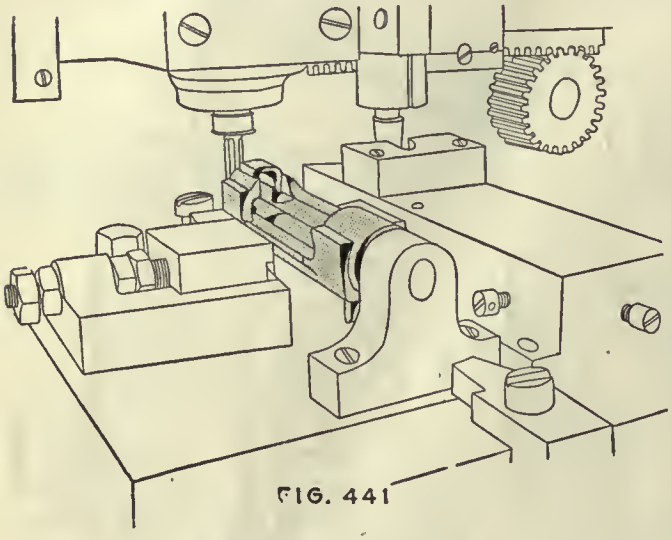

FIG. 441

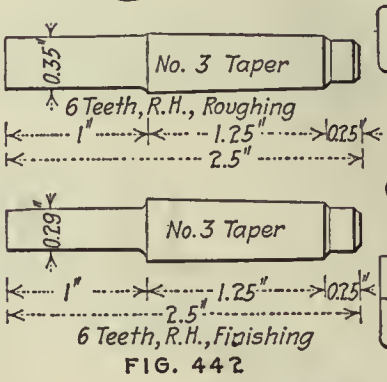

FIG. 442

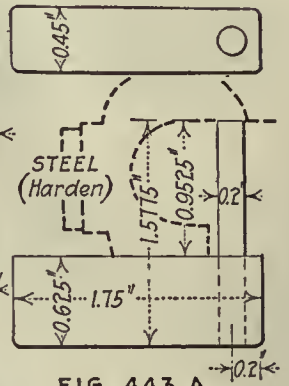

FIG. 443 A

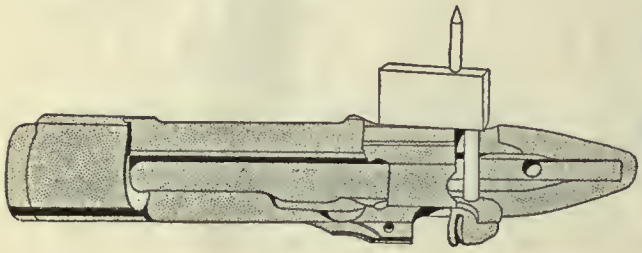

FIG. 443 A

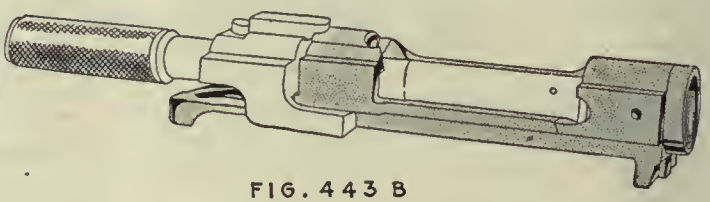

FIG. 443 B

Operation 50

OPERATION 48½. MILLING SEAR SLOT, FINISH

Transformation—Same as Fig. 432. Machine Used—Pratt & Whitney No. 2 Lincoln type millier. Number of Machines per Operator—One. Work-Holding Devices—Same as Fig. 433. Tool-Holding Devices—Same as Fig. 434-A. Cutting Tools—See finish-cutter dimensions in Fig. 434-B. Number of Cuts—One. Cut Data—Speed, 70 r.p.m.; ⅝-in. feed. Coolant—Compound, ¼-in. stream. Average Life of Tool Between Grindings—2,000 pieces. Gages—Fig. 435; A, centering gage, locates from right side; B, width of slot; C, depth; base A is set across bottom of receiver and point B indicates by multiplying lever; bottom of both sear slot and receiver should be the same. Production—40 pieces per hr.

OPERATION 49. MILLING COCKING-PIECE GROOVE IN RECEIVER

Transformation—Fig. 436. Machine Used—Pratt & Whitney No. 2 Lincoln type millier. Number of Machines per Operator—Two. Work-Holding Devices—Held on stud and in vise jaws, Fig. 437; locates by stud and top of sear lug. Tool-Holding Devices—Taper shank, Fig. 438-A. Cutting Tools—Side-milling cutter, Fig. 438-B. Number of Cuts—One. Cut Data—Speed, 70 r.p.m.; ⅝-in. feed. Coolant—Compound, ¼-in. stream. Average Life of Tool Between Grindings—200 pieces. Gages—Fig. 439; A, length from front end of receiver; B, width, depth and location from right side. Production—20 pieces per hr., one machine. Note—Working points, hole and top of sear flange.

Compound, two ¼-in. streams. Average Life of Tool Between Grindings—200 pieces. Gages—Fig. 447; A, width of groove; B, depth; under side is curved to fit a plug, outside to fit radius of groove; the gage must slide between plug and receiver wall; C, location; finger A rests on right side when block B is in groove. Production—40 pieces per hr. Note—Working points, hole and bottom.

OPERATION 50. PROFILING REAR OF SAFETY-LUG SLOT

Transformation—Fig. 440. Machine Used—Pratt & Whitney No. 2 profiler; machining diagram, Fig. 440-A. Number of Operators per Machine—One. Work-Holding Devices—Held by stud and vise jaws, Fig. 441. Tool-Holding Devices—Taper shank. Cutting Tools—End mills, Fig. 442. Number of Cuts—Two. Cut Data—Speed, 1,200 r.p.m.; hand feed. Coolant—Compound, two ¼-in. streams. Average Life of Tool Between Grindings—400 pieces. Gages—Fig. 443; A, location from right side; B, plug goes in receiver, finger A, locates against right side, while a block on top fits the slot; a straight-edge across front measures correct distance. Production—75 per hr. Note—Working points, hole and bottom.

OPERATION 51. PROFILING COCKING-PIECE GROOVE

Transformation—Fig. 444. Machine Used—Pratt & Whitney No. 2 profiler; machining diagram, Fig. 444-A. Number of Operators per Machine—One. Work-Holding Devices—Held on stud and vise jaws, Fig. 445. Tool-Holding Devices—Taper shank. Cutting Tools—End mill, Fig. 446. Number of Cuts—Two. Cut Data—1,200 r.p.m.; hand feed. Coolant—

Operations on the Receiver—(*Continued*)

The use of the closely fitting mandrel for gaging as well as for working is brought out very clearly in operation 52 and shown in Fig. 450.

As examples of some minor operations, it is only necessary to refer to Figs. 465 and 466 to Figs. 467 and 470; to Figs. 511 and 512, to Figs. 519 and 520 and to Figs. 533 and 534, although there are by no means all that can be studied to advantage.

This may also be a good time to refer specifically to some of the gages and gaging operations such as Figs. 468, 472, 480, 495, 500, 504, 514, 518, 522, 526, 537, 555 and 563.

On an article which is as complicated as the Springfield rifle receiver, speaking relatively to the number and sequence of operations, there must always be a large number of minor cleaning up, burring, filing, and polishing operations which are really as essential to the correct finishing of the piece as are the more pretentious and difficult machining operations which have preceded them. And it is a fact that while these minor operations appear in themselves to be unimportant in the average shop they are often the ones that are found to delay most everything else. It is a case of little difficulties becoming big obstacles.

The progressive shop manager, especially in such plants as are concentrating their energies on mass production of one article, has an opportunity to make extensive savings in cost by eliminating the delays which necessarily arise with a succession of these minor operations. One of the most potent ways to save money on a sequence of such operations is to as far as possible eliminate the handwork.

No matter how highly skilled hand labor becomes, it can never approach the efficiency of a mechanical device properly designed to perform the same work. This is almost a self-evident statement, and it is borne out by a multitude of cases common to the experience of any shop

FIG. 448

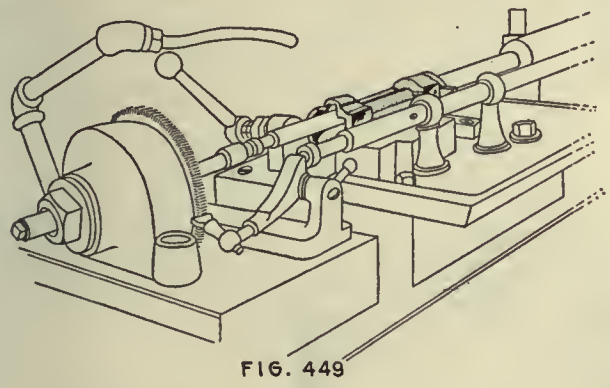

FIG. 449

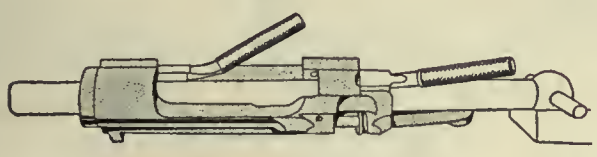

FIG. 450

Operation 52

OPERATION 52. SHAVING SAFETY-LUG SLOT

Transformation—Fig. 448. Machine Used—Machine made at Hill shops, Fig. 449. Number of Operators per Machine—One. Work-Holding Devices—Held in vise jaws. Tool-Holding Devices—In barrel. Cutting Tools—Radius cutters. Cut Data—30 strokes per min.; 0.005-in. feed. Coolant—Cutting oil, ½-in. stream. Average Life of Tool Between Grindings—150 pieces. Gages—Fig. 450; A, width; B, depth, curved to fit between plug and bridge over safety-lug slot. Production—50 pieces per hr. Note—Located by bottom and side.

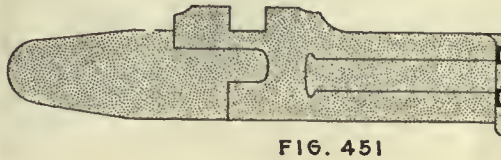

FIG. 451

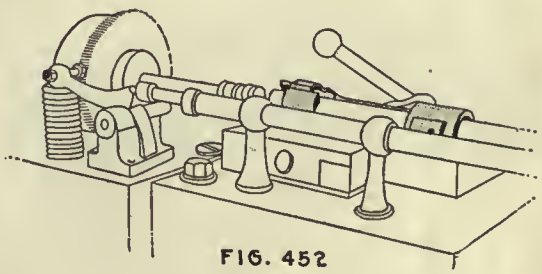

FIG. 452

Operation 53

FIG. 453

OPERATION 53. SHAVING FRONT LOCKING-LUG SLOT

Transformation—Fig. 451. Machine Used—Machine made at Hill shops. Number of Operators per Machine—One. Work-Holding Devices—Held in vise jaws, Fig. 452. Tool-Holding Devices—Same as Fig. 371. Cutting Tools—Similar to Fig. 371. Cut Data—50 strokes per min.; hand feed. Coolant—Cutting oil, ⅛-in. stream. Average Life of Tool Between Grindings—150 pieces. Gages—Fig. 453, depth of slot, goes between plug and wall. Production—50 pieces per hr. Note—Locating points, bottom and side.

OPERATION 54. SHAVING EJECTOR SLOT

Transformation—Fig. 454. Machine Used—Machine made at Hill shops, same as Fig. 370. Number of Operators per Machine—One. Work-Holding Devices—Held in vise jaws, Fig. 455. Tool-Holding Devices—Same as Fig. 370. Cutting Tools—Similar to Fig. 371. Cut Data—Speed, 50 strokes per minute; 0.005-in. feed. Coolant—Cutting oil, ⅛-in. stream. Average Life of Tool Between Grindings—120 pieces. Gages—Fig. 456; A, width; B, centering with lug slot. Production—60 pieces per hr. Note—Locating points, bottom and side; observe that this is a hand-operated device.

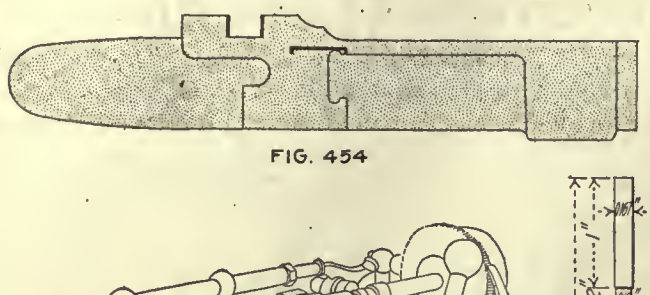

FIG. 454

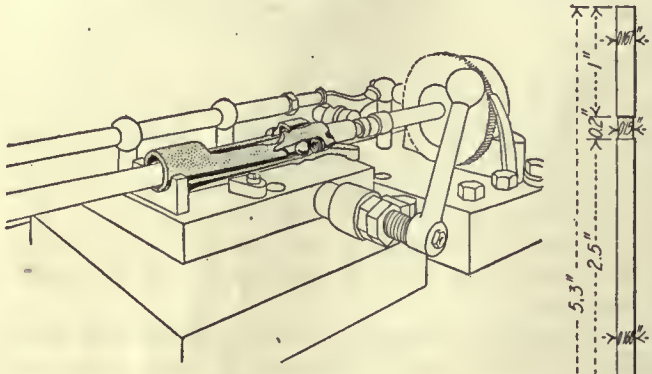

FIG. 455

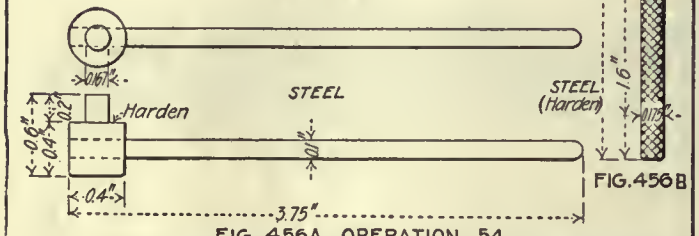

FIG. 456B

FIG. 456A OPERATION 54

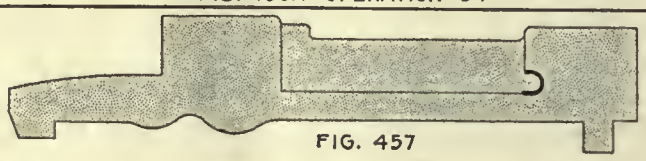

FIG. 457

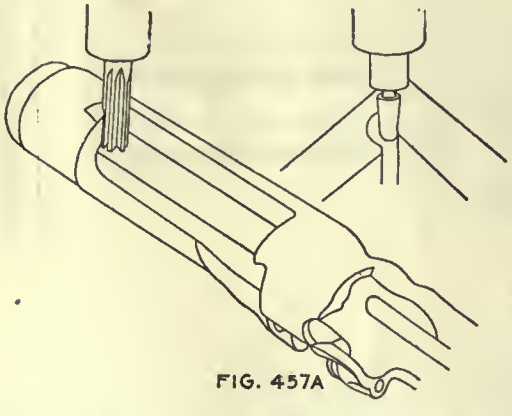

FIG. 457A

OPERATION 55. PROFILING BULLET CLEARANCE

Transformation—Fig. 457. Machine Used—Pratt & Whitney No. 2 profiler; machining diagram, Fig. 457-A. Number of Operators per Machine—One. Work-Holding Devices—Held in stud and vise jaws, Fig. 458. Tool-Holding Devices—Taper shank. Cutting Tools—End mill, Fig. 459. Number of Cuts—One. Cut Data—Speed. 1,200 r.p.m.; hand feed. Coolant—Compound, ¼-in. stream. Average Life of Tool Between Grindings—350 pieces. Gages—Fig. 460, shape and distance from front end. Production—75 pieces per hr. Note—Locating points, hole and bottom.

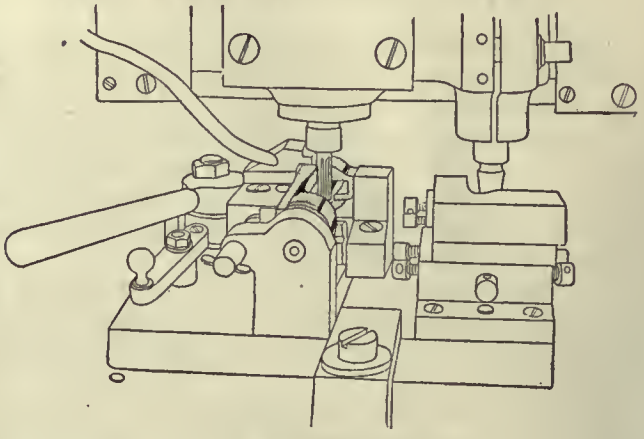

FIG. 458

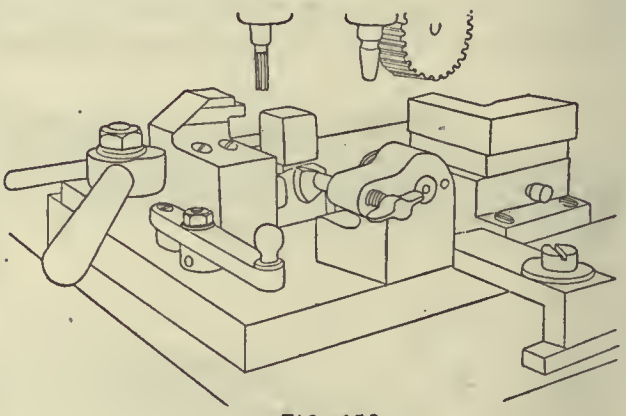

FIG. 458

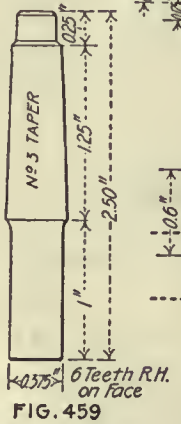

FIG. 459

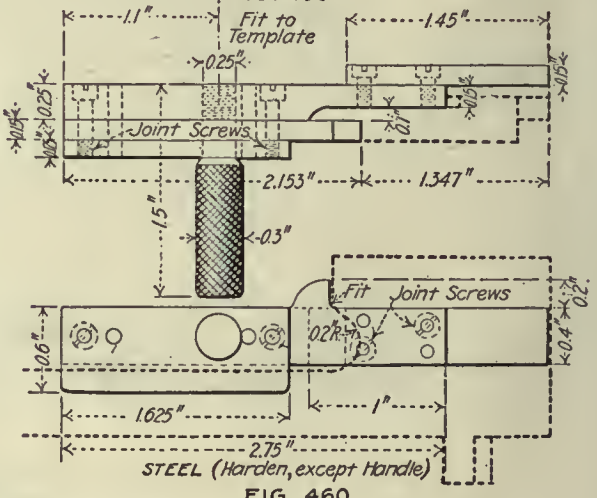

FIG. 460

OPERATION 55

OPERATION 56. MILLING END OF TANG

Transformation—Fig. 461. Machine Used—Pratt & Whitney No. 2 Lincoln miller. Number of Operators per Machine—One. Work-Holding Devices—Work held in stud and vise jaws, Fig. 462, with locking latch over tang. Tool-Holding Devices—Taper shank. Cutting Tools—Form cutter, Fig. 463. Number of Cuts—One. Cut Data—Speed, 120 r.p.m.; ⅝-in. feed. Coolant—Compound, ¼-in. stream. Average Life of Tool Between Grindings—1,000 pieces. Gages—Fig. 464, total length of receiver. Production—65 pieces per hr. Note—Locating points, hole and bottom point of tang; notice that the receiver is held vertically during this operation.

OPERATION 57. HAND MILLING SAFETY-LUG CAM

Transformation—Fig. 465. Machine Used—Whitney Manufacturing Co. No. 6 hand miller. Number of Operators per Machine—One. Work-Holding Devices—Held on stud and finger clamp, Fig. 466; work is set at proper angle for milling cam. Tool-Holding Devices—Taper shank. Cutting Tools—End mill, Fig. 467. Number of Cuts—One. Cut Data—600 r.p.m.; hand feed. Coolant—Cutting oil put on with brush. Average Life of Tool Between Grindings—2,000 pieces. Gages—Fig. 468, position of cam from front end of receiver; straight-edge used at front end. Production—175 pieces per hr. Note—Locating points are hole and bottom.

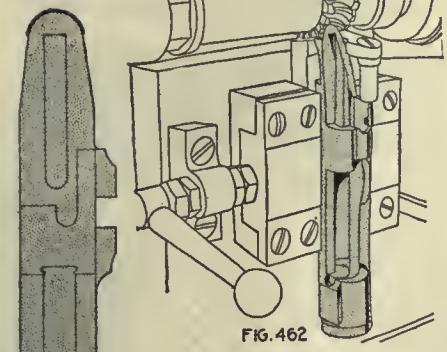

FIG. 461

FIG. 462

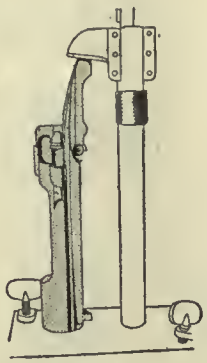

FIG. 464

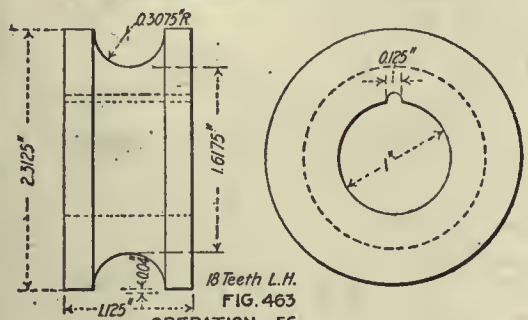

FIG. 463
OPERATION 56

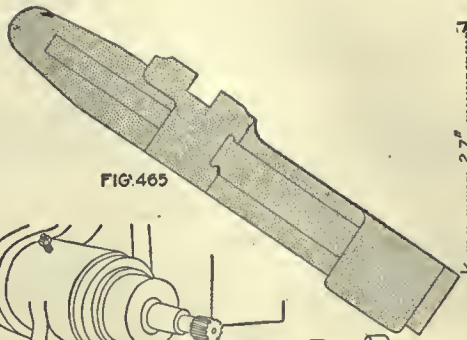

FIG. 465

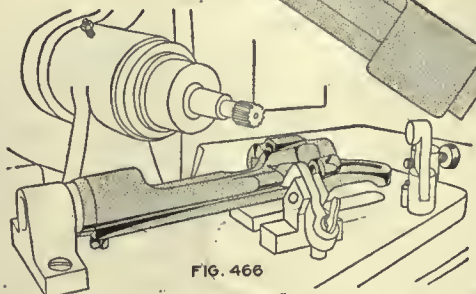

FIG. 466

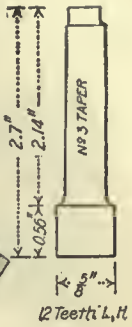

FIG. 467

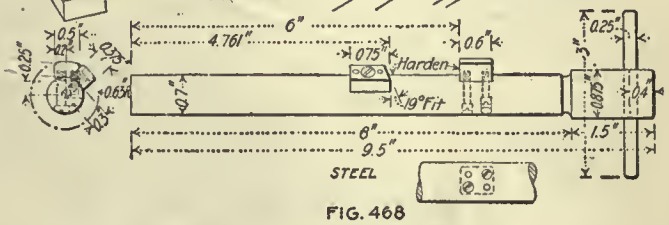

FIG. 468
OPERATION 57

FIG. 469

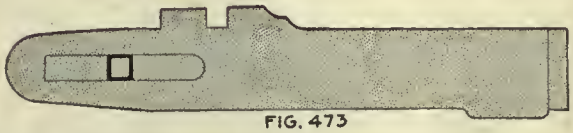

FIG. 473

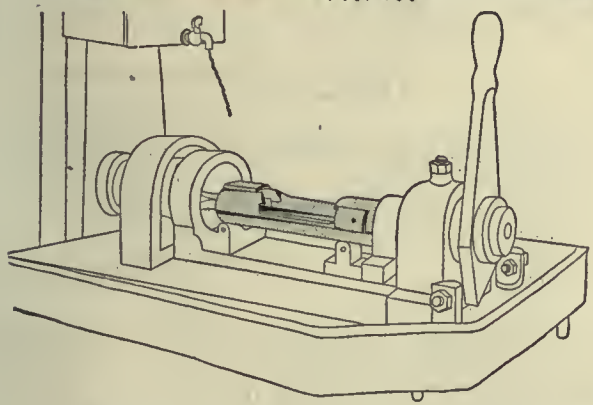

FIG. 470

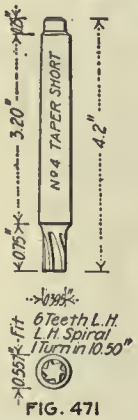

FIG. 471

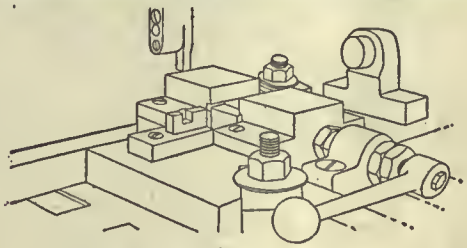

FIG. 474

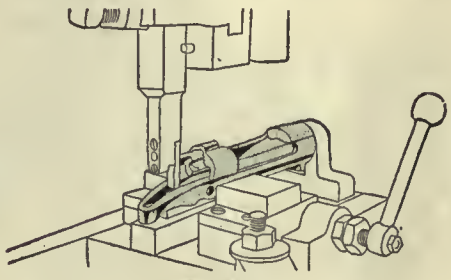

FIG. 474

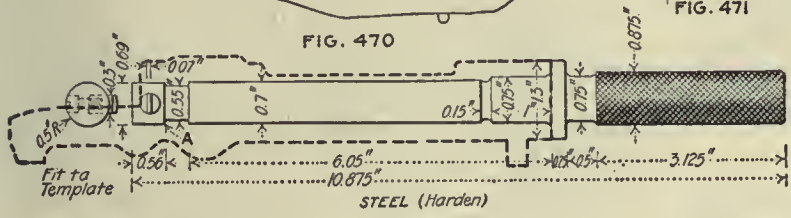

FIG. 472
OPERATION 58

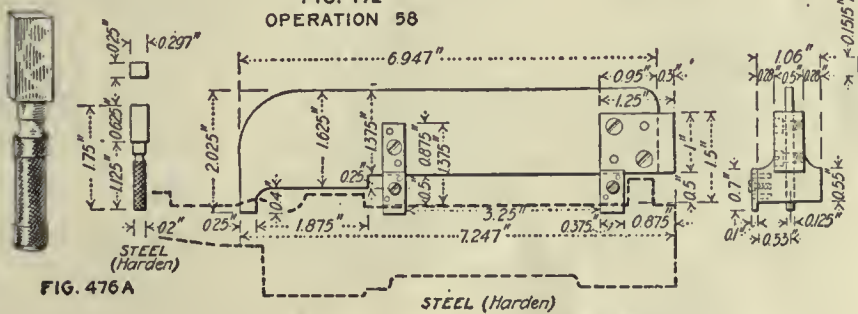

FIG. 476A

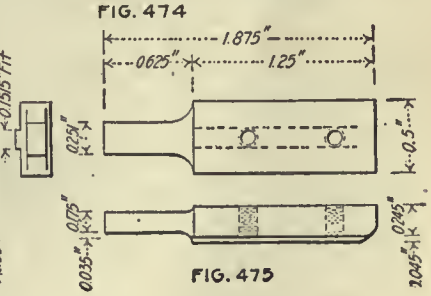

FIG. 475

FIG. 476B
OPERATION 59

man. Possibly one of the reasons for the existence of this fact is due to the slight but inevitable period of time which must elapse between the conception of an idea and its manual execution. It may almost be said that for very simple repetitive operations which do not require a high degree of intelligence, that the presence of intelli-

FIG.477

FIG.481

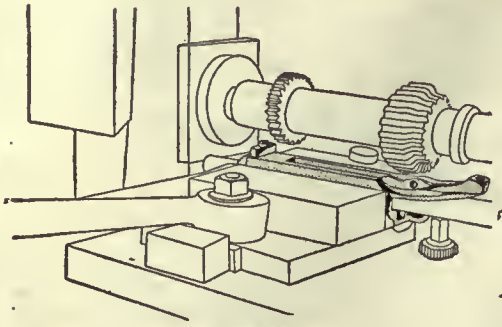

FIG.478

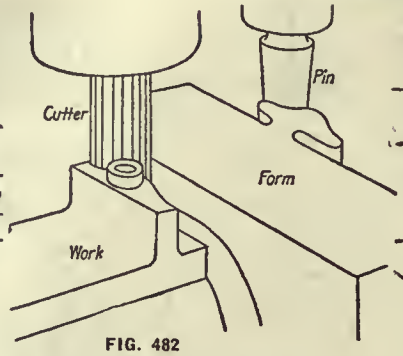

FIG. 482

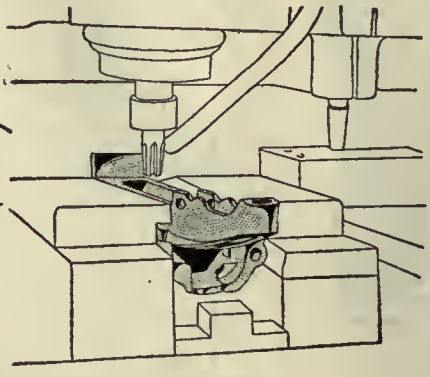

FIG.483

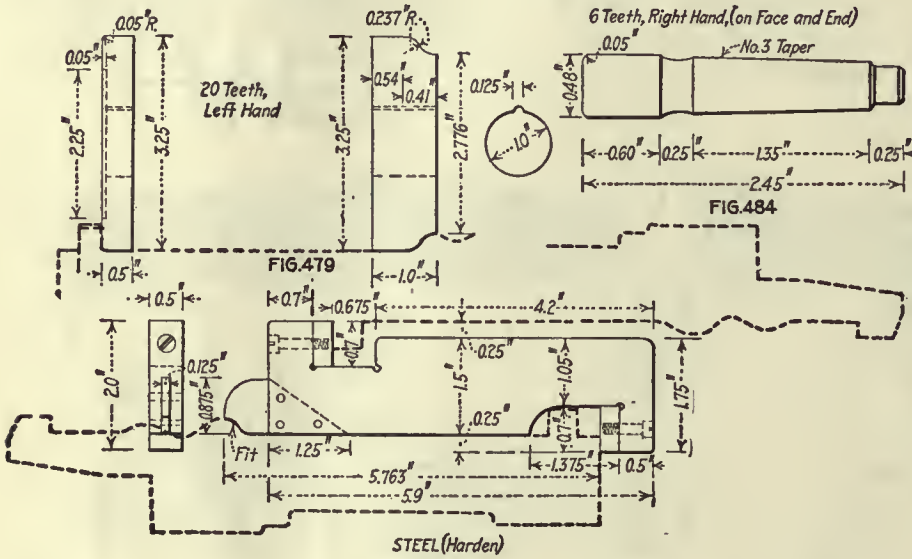

FIG.479

FIG480

OPERATION 71

FIG.484

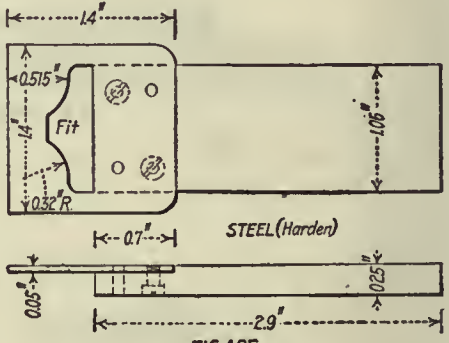

FIG.485

OPERATION 69

OPERATION 58. HAND MILLING EXTRACTOR CAM

Transformation—Fig. 469. Machine Used—Standard No. 4½ hand milling machine. Number of Operators per Machine—One. Work-Holding Devices—Held in rotating fixture, Fig. 470. Tool-Holding Devices—Taper shank. Cutting Tools—End mill, Fig. 471. Number of Cuts—One. Cut Data—Speed, 800 r.p.m.; hand feed. Coolant—Cutting oil, ⅛-in. stream. Average Life of Tool Between Grindings—4,000 pieces. Gages—Fig. 472, radius of recess behind cam and distance of cam from front of receiver; edge A shows through cutoff opening when distance is correct. Production—175 pieces per hr. Note—Locating points are hole and bottom.

OPERATION KK. REMOVING BURRS LEFT BY OPERATIONS 48, 49 AND 56

Number of Operators—One. Description of Operation—Removing burrs thrown up by operations 48, 49 and 56. Apparatus and Equipment Used—File and reamer. Production—150 pieces per hr.

OPERATION 59. SHAVING SEAR-NOSE SLOT

Transformation—Fig. 473. Machine Used—Bement Miles Co. slotting machine. Number of Operators per Machine—One. Work-Holding Devices—Held on a stud in vise jaws, Fig. 474. Tool-Holding Devices—Cutter screwed to holder, similar to Fig. 369. Cutting Tools—Slotting cutter, Fig. 475. Cut Data—60 strokes per minute; hand feed. Coolant—Cutting oil put on with brush. Average Life of Tool Between Grindings—300 pieces. Gages—Fig. 476; A, size of slot; B, position from front end of receiver. Production—75 pieces per hr. Note—Locating points, hole and bottom.

OPERATION 71. MILLING REAR END OF MAGAZINE TO LENGTH AND REAR OF RECOIL LUG

Transformation—Fig. 477. Machine Used—Pratt & Whitney No. 2 Lincoln miller. Number of Machines per Operator—Two. Work-Holding Devices—Held on mandrel and vise jaws, Fig. 478. Tool-Holding Devices—Cutter arbor. Cutting Tools—Facing mill and form cutter, Fig. 479. Number of Cuts—One. Cut Data—Speed, 80 r.p.m.; ⅝-in. feed. Coolant—Compound, two ¼-in. streams. Average Life of Tool Between Grindings—2,000 pieces. Gages—Fig. 480, contour and distance of lug from front end. Production—50 pieces per hr. Note—Locating points, hole and sides.

OPERATION 69. PROFILING FRONT END OF RECOIL LUG

Transformation—Fig. 481. Machine Used—Pratt & Whitney No. 2 profiler; machining diagram, Fig. 482. Number of Operators per Machine—One. Work-Holding Devices—Held on stud and vise jaws, Fig. 483. Tool-Holding Devices—Taper shank. Cutting Tools—End mill, Fig. 484. Number of Cuts—Two. Cut Data—1,200 r.p.m.; hand feed. Coolant—Compound, two ¼-in. streams. Average Life of Tool Between Grindings—400 pieces. Gages—Fig. 485, form gage that fits over lug. Production—80 pieces per hr. Note—Locating points, hole and side.

OPERATION 60. MILLING THROUGH MAGAZINE REAR END (BREAKING THROUGH)

Transformation—Fig. 486. Machine Used—Pratt & Whitney No. 2 Lincoln miller. Number of Machines per Operator—Two. Work-Holding Devices—Held on stud and vise jaws, Fig. 487, on a rising and falling fixture to sink cutter into work. Tool-Holding Devices—Cutter arbor, Fig. 488. Cutting Tools—Side-milling cutter, Fig. 489. Number of Cuts—One. Cut Data—Speed, 130 r.p.m.; ⅝-in. feed. Coolant—Compound, ¼-in. stream. Average Life of Tool Between Grindings—2,000 pieces. Gages—Fig. 490; A, width; B, location from sides. Production—210 pieces per hr. Note—Locating points, hole and sides.

OPERATION 61. MILLING THROUGH MAGAZINE FRONT END

Transformation—Fig. 491. Machine Used—Garvin No. 2 Lincoln miller. Number of Machines per Operator—Two. Work-Holding Devices—Same as Fig. 487. Tool-Holding Devices—Same as Fig. 488, except to fit Garvin miller. Cutting Tools—Form cutters, Fig. 492. Number of Cuts—One. Cut Data—Speed, 120 r.p.m.; ⅝-in. feed. Coolant—Compound, ¼-in. stream. Average Life of Tool Between Grindings—2,000 pieces. Gages—See Fig. 490. Production—40 pieces per hr.

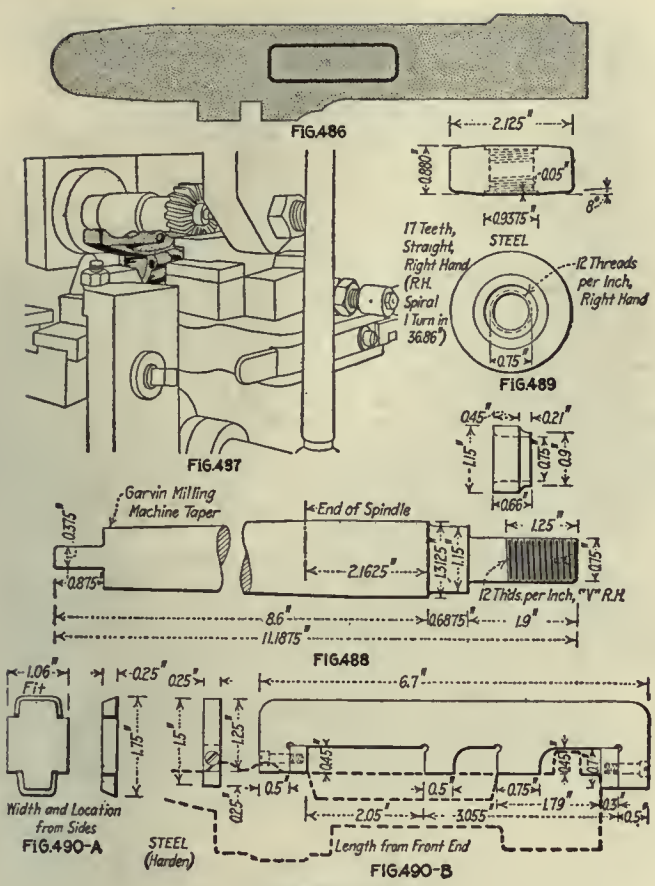

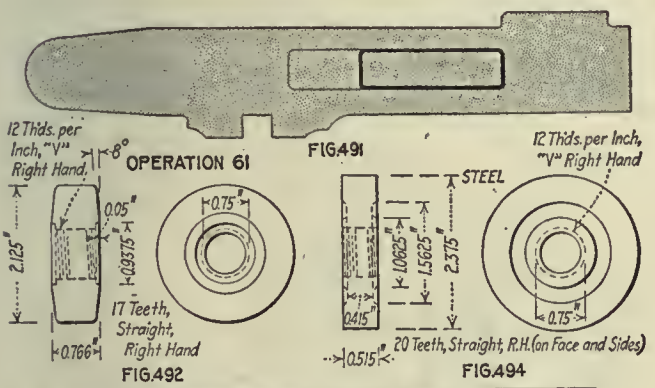

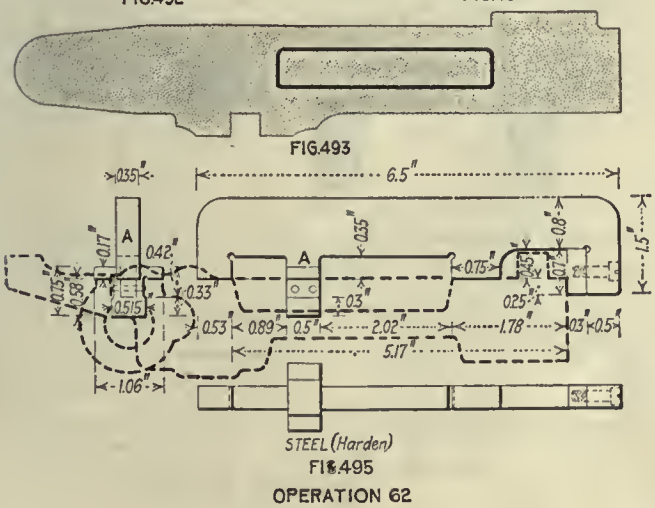

OPERATION 62. MILLING THROUGH MAGAZINE FROM REAR TO FRONT

Transformation—Fig. 493. Machine Used—Garvin miller, Lincoln type. Number of Machines per Operator—Two. Work-Holding Devices—Same as Fig. 487. Tool-Holding Devices—Same as Fig. 488, except fitted to machine. Cutting Tools—Milling cutter, Fig. 494. Number of Cuts—One. Cut Data—Speed, 120 r.p.m.; ⅝-in. feed. Coolant—Compound, ¼-in. stream. Average Life of Tool Between Grindings—2,000 pieces. Gages—Fig. 495, length of slot from front end; the portion A gages width of slot and centers it with slide. Production—40 pieces per hr.

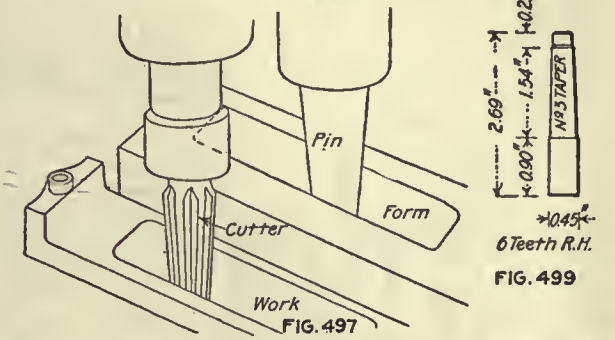

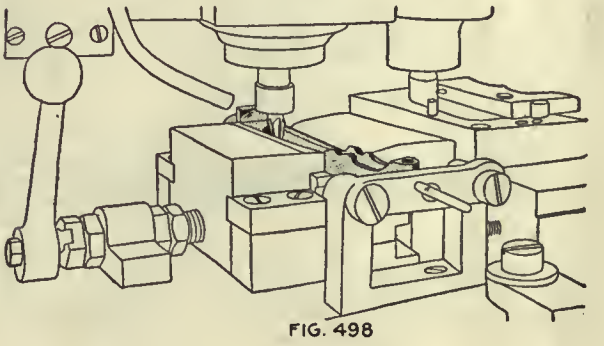

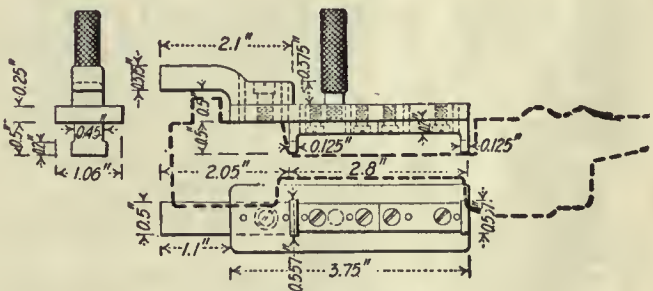

OPERATION LL. REMOVING BURRS LEFT BY OPERATION 71

Number of Operators—One. Description of Operation—Filing burrs left by operation 71. Apparatus and Equipment Used—File and scraper. Production—250 pieces per hr.

OPERATION 63. PROFILING MOUTH OF MAGAZINE, ROUGH

Transformation—Fig. 496. Machine Used—Pratt & Whitney No. 2 profiler; machining diagram, Fig. 497. Number of Operators per Machine.—One. Work-Holding Devices—Held by studs in front end and by vise jaws at sides, Fig. 498. Tool-Holding Devices—Taper shank. Cutting Tools—Milling cutter, Fig. 499. Number of Cuts—Two. Cut Data—1,200 r.p.m.; hand feed. Coolant—Compound, two ¼-in. streams. Average Life of Tool Between Grindings—150 pieces. Gages—Fig. 500, width of magazine opening. Production—20 pieces per hr.

FIG.501

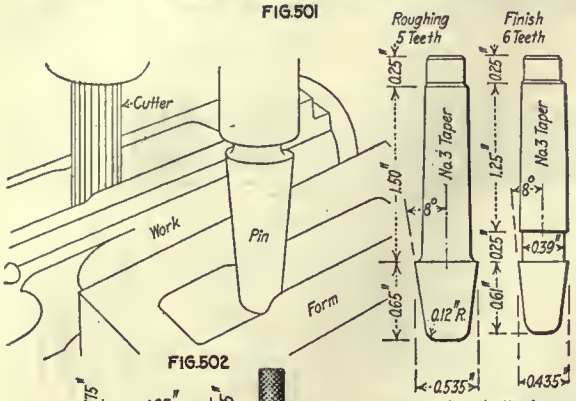

FIG.502

FIG.503

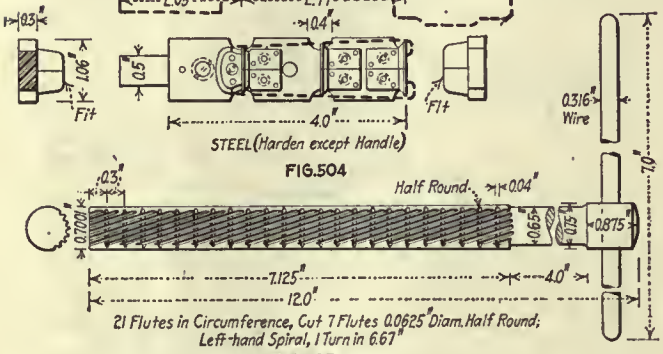

FIG.504

FIG.505

OPERATION 64

OPERATION 64. PROFILING MAGAZINE TO FINISH

Transformation—Fig. 501. Machine Used—Pratt & Whitney No. 2 profiler; machining diagram, Fig. 502. Number of Operators per Machine—One. Work-Holding Devices—Same as Fig. 498. Tool-Holding Devices—Taper shank. Cutting Tools—Milling cutters, Fig. 503. Number of Cuts—Two. Cut Data—1,200 r.p.m.; hand feed. Coolant—Compound, two ¼-in. streams. Average Life of Tool Between Grindings—150 pieces. Gages—Fig. 504, size, position and shape. Production—20 pieces per hr.

OPERATION MM. REMOVING BURRS LEFT BY OPERATION 63 (REAMER)

Number of Operators—One. Description of Operation—Removing burrs thrown up by operation 64. Apparatus and Equipment Used—File and reamer, Fig. 505. Gages—None. Production—250 pieces per hr.

OPERATIONS 64½ AND 65. PROFILING BEVEL FRONT-END WALL OF MAGAZINE; PROFILING REAR CORNERS OF MAGAZINE

Transformation—Fig. 506. Machine Used—Pratt & Whitney No. 2 profiler; machining diagram, Fig. 507. Number of Operators per Machine—One. Work-Holding Devices—Held by front-end stud and vise jaws, Fig. 508. Tool-Holding Devices—Taper shank. Cutting Tools—Bevel cutter and end mill, Fig. 509; A, bevel for front walls; B, for round corners in rear. Number of Cuts—Two. Cut Data—1,200 r.p.m.; hand feed. Coolant—Compound, two ¼-in. streams. Average Life of Tool Between Grindings—200 pieces. Gages—Fig. 510; A, angle of front end; B, shape of rear; C, rear corners. Production—45 pieces per hr.

OPERATION 66. PROFILING LOWER RAMP

Transformation—Fig. 511. Machine Used—Pratt & Whitney No. 2 profiler. Number of Operators per Machine—One. Work-Holding Devices—Held on stud and finger clamp, Fig. 512, operated by lever; tang is supported by clamp and thumb-screw. Tool-Holding Devices—Taper shank. Cutting Tools—End mill, Fig. 513. Number of Cuts—Two. Cut Data—Speed, 1,200 r.p.m.; hand feed. Coolant—Compound, two ¼-in. streams. Average Life of Tool Between Grindings—200 pieces. Gages—Fig. 514, rests on bottom with tongue through front end; locates position of slot by straight-edge across front end. Production—45 pieces per hr.

OPERATION NN. REMOVING BURRS LEFT BY OPERATIONS 64½ AND 65

Number of Operators—One. Description of Operation—Removing burrs thrown up by operations 64½ and 65. Apparatus and Equipment Used—File and reamer, same as Fig. 505. Gages—None. Production—250 pieces per hr.

OPERATION 68. COUNTERBORING FOR EJECTOR PIN AND REAR GUARD SCREW AND MILLING FOR FRONT END OF GUARD

Transformation—Fig. 515. Machine Used—Pratt & Whitney 14-in. vertical four-spindle drilling machine. Number of Operators per Machine—One. Work-Holding Devices—Drill jig, Fig. 516; held on mandrel and clamped down by finger clamp; located by hole and right side. Tool-Holding Devices—Drill chucks. Cutting Tools—Reamer a, two counterbores b and c and one hollow mill d with pilot, Fig. 517; a, reamer for ejector pin; b, counterbore for pin; c, counterbore for rear guard screw; d, hollow mill with pilot for front guard screw on recoil lug. Number of Cuts—One each. Cut Data—600 r.p.m.; hand feed. Coolant—Cutting oil, ⅛-in. stream. Average Life of Tool Between Grindings—200 pieces. Gages—Fig. 518; a, depth of ejector-pin counterbore; b, diameter of both ejector-pin holes; c, height of recoil lug from bottom of receiver; d (back end of same gage), diameter of boss; e, gages height of counterbore in tang with bottom of receiver. Production—40 pieces per hr.

OPERATION 67. PROFILING UPPER RAMP

Transformation—Fig. 519. Machine Used—Ames Manufacturing Co. single-spindle profiler. Number of Operators per Machine—One. Work-Holding Devices—Held against bottom by finger clamp, Fig. 520, operated by cam A; located by upper stop B; supported by a screw. Tool-Holding Devices—Taper

FIG. 506

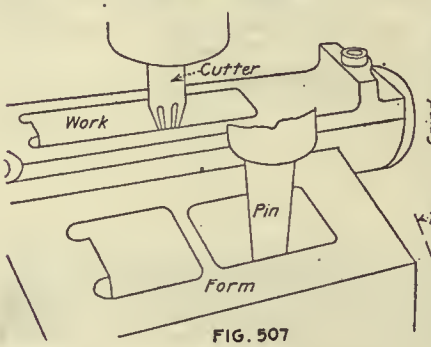

FIG. 507

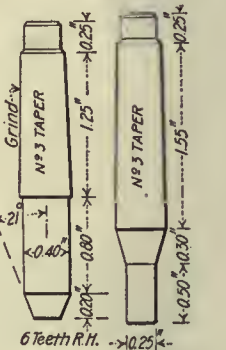

FIG. 509

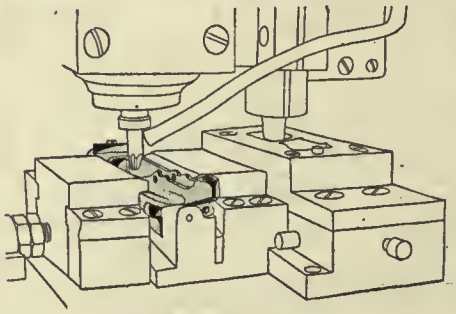

FIG. 508

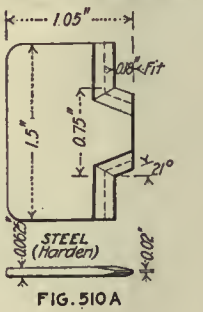

FIG. 510A

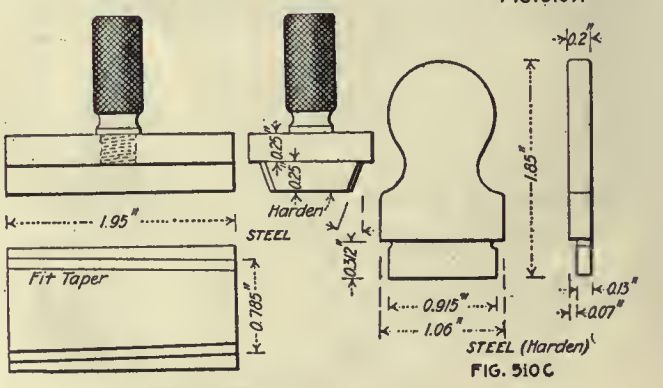

FIG. 510B

FIG. 510C

OPERATION 64½ & 65

gence in the operator is a handicap. A machine does not think, neither does it lose time by stopping to think.

Advantage has been taken of these simple but important facts in the arrangement of minor operations at

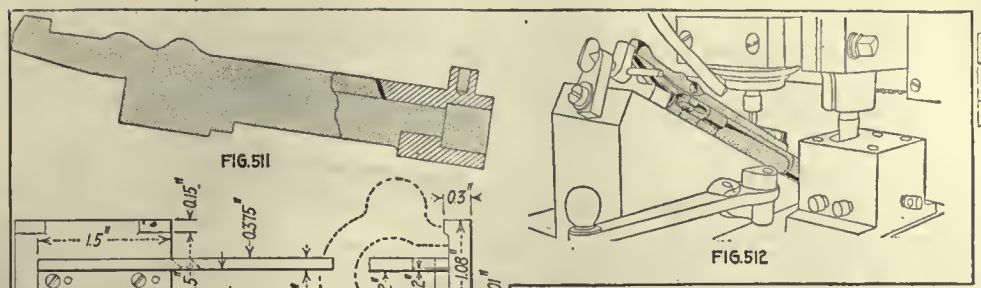

FIG. 511

FIG. 512

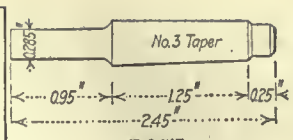

FIG. 513

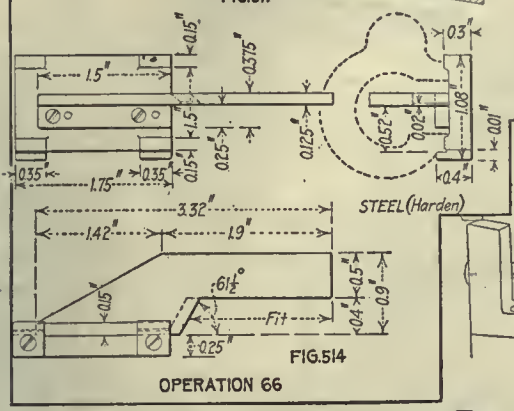

FIG. 514

OPERATION 66

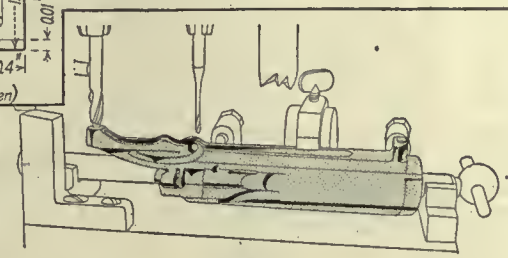

FIG. 516

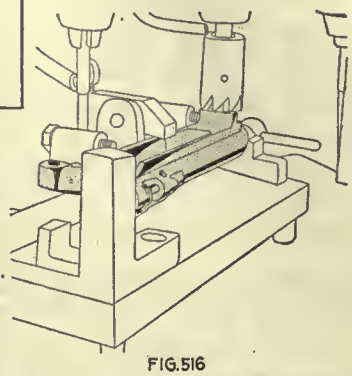

FIG. 516

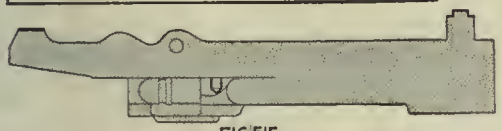

FIG. 515

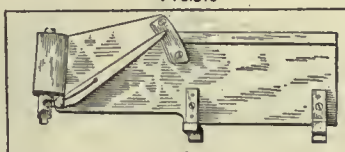

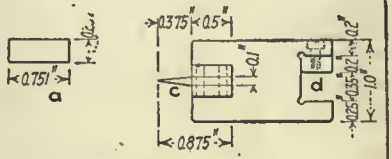

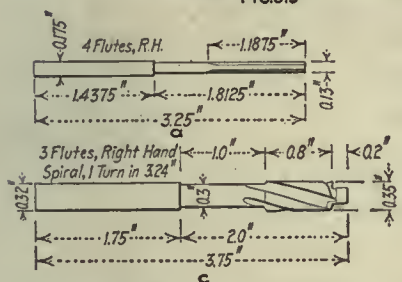

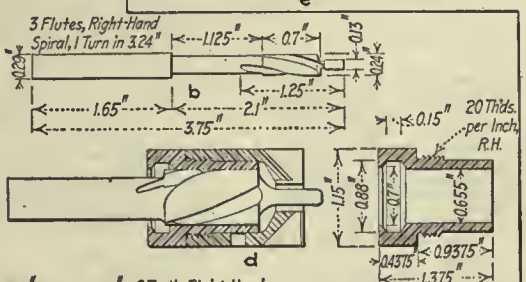

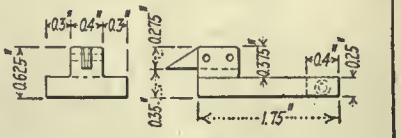

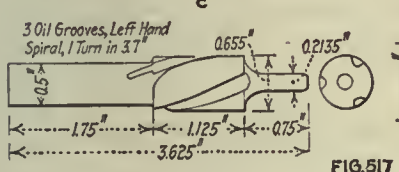

FIG. 517

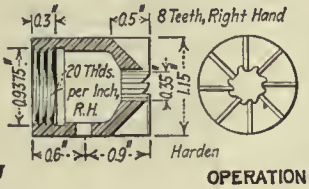

OPERATION 68

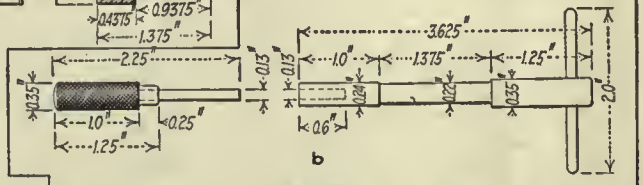

FIG. 518

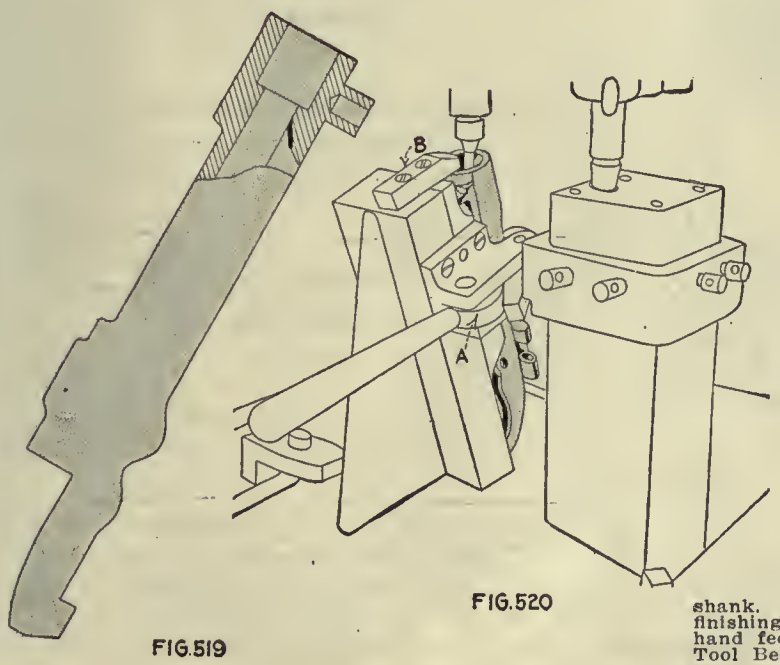

FIG. 519

FIG. 520

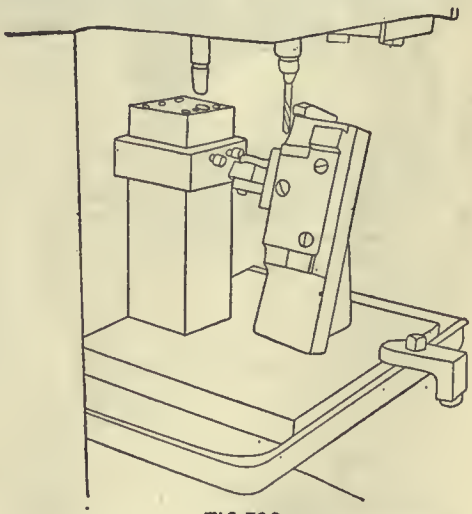

FIG. 520

shank. Cutting Tools—End mill, Fig. 521; A, roughing; B, finishing. Number of Cuts—Two. Cut Data—1,300 r.p.m.; hand feed. Coolant—Triumph cutting oil. Average Life of Tool Between Grindings—300 pieces. Gages—Fig. 522, used same as gage in Fig. 514. Production—80 pieces per hr.

the Springfield armory. It is evidenced for instance in this article in the large number of shaving operations for which special machinery has been designed. As a rule an operation of this kind replaces what would ordinarily be handwork and does it efficiently as to cost.

OPERATION 70. SHAVING REAR END OF MAGAZINE

Transformation—Fig. 523. Machine Used—Bement Miles slotting machine, 28-in. table. Number of Operators per Machine—One. Work-Holding Devices—Held on studs at each end and by cam-operated vise jaws, Fig. 524; forced against fixed stud A by thumb-screw B; clamped by cam C. Tool-Holding Devices—Cutter screwed to holder, same as operation 38. Cutting Tools—Slotting cutter, Fig. 525. Cut Data—Speed, 60 strokes; hand feed. Coolant—Cutting oil put on with brush. Average Life of Tool Between Grindings—250 pieces. Gages—Fig. 526; goes on bottom and is measured from front end by straight-edge. Production—80 pieces per hr.

OPERATION OO. REMOVING BURRS LEFT BY OPERATION 70 (REAMER)

Number of Operators—One. Description of Operation—Removing burrs thrown up by operation 70. Apparatus and Equipment Used—Reamer, same as Fig. 505. Production—250 pieces per hr.

OPERATION 73. MILLING RIGHT SIDE OF REAR LOCKING-LUG SEAT TO FINISH

Transformation—Fig. 527. Machine Used—Pratt & Whitney No. 2 Lincoln milier. Number of Operators per Machine—One. Work-Holding Devices—Held in double vise, same as operation 74, Fig. 530. Tool-Holding Devices—Standard arbor. Cutting Tools—Forming cutters, Fig. 528. Number of Cuts—One. Cut Data—Speed, 60 r.p.m.; feed, ⅝ in. per min. Coolant—Compound, two ¼-in. streams. Average Life of Tool Between Grindings—2,500 pieces. Gages—Similar to Fig. 532. Production—30 pieces per hr. Note—Using bottom and hole as working points.

OPERATION 74. MILLING RIGHT SIDE OF FRONT LOCKING LUG TO FINISH

Transformation—Fig. 529. Machine Used—Pratt & Whitney No. 2 Lincoln milier. Number of Operators per Machine—One. Work-Holding Devices—Held in double vise on mandrel, Fig. 530. Tool-Holding Devices—Standard arbor. Cutting Tools—Forming cutters, Fig. 531. Number of Cuts—One. Cut Data—Speed, 60 r.p.m.; ⅝-in. feed. Coolant—Compound, two ¼-in. streams. Average Life of Tool Between Grindings—3,000 pieces. Gages—Fig. 532. Production—30 pieces per hr. Note—Locating points, bottom and hole.

OPERATIONS 75 AND 76. PROFILING BOLT-STOP CAVITY (FIRST AND SECOND CUT)

Transformation—Fig. 533. Machine Used—Pratt & Whitney No. 2 profiler; machining diagram, Fig. 534. Number of Operators per Machine—One. Work-Holding Devices—Held on stud and in vise jaws, Fig. 535. Tool-Holding Devices—Taper shank. Cutting Tools—Slotting cutters, Fig. 536; A, first cut; B, second cut. Number of Cuts—Two. Cut Data—1,200 r.p.m.; hand feed. Coolant—Compound, ¼-in. stream. Average Life of Tool Between Grindings—450 pieces. Gages—Fig. 537; A, thickness of wide slot; B, thickness of narrow slot; C, depth from bottom and front end; D, location from bottom; E, location from front end and side. Production—60 pieces per hr.

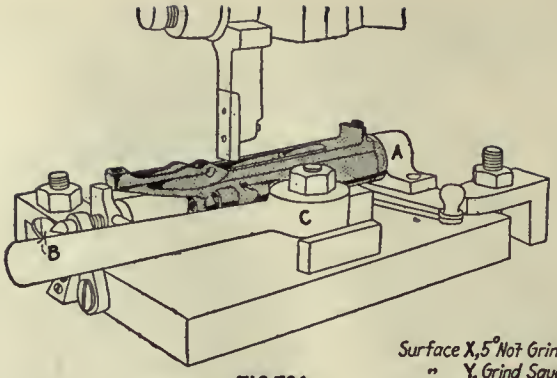

FIG.524

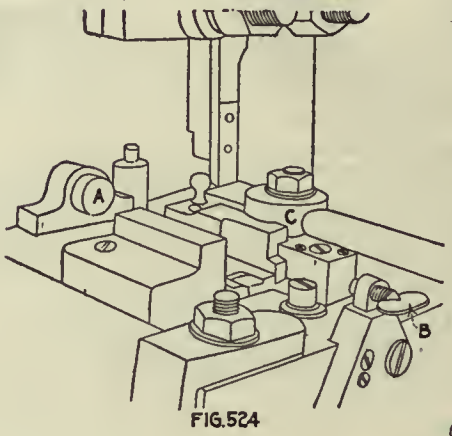

FIG.524

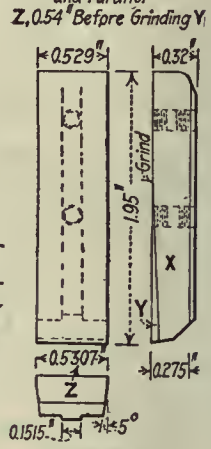

FIG.525

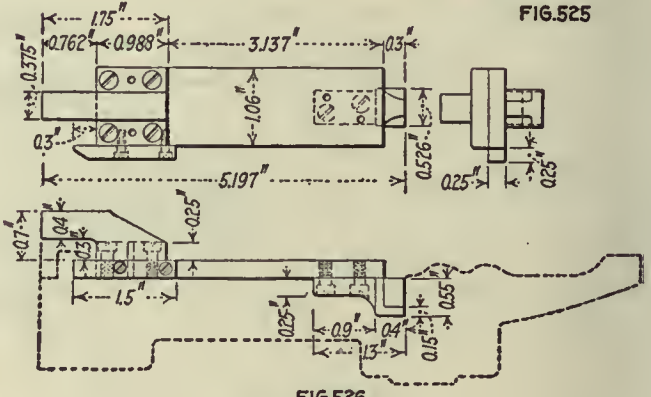

FIG.526
OPERATION 70

FIG.523

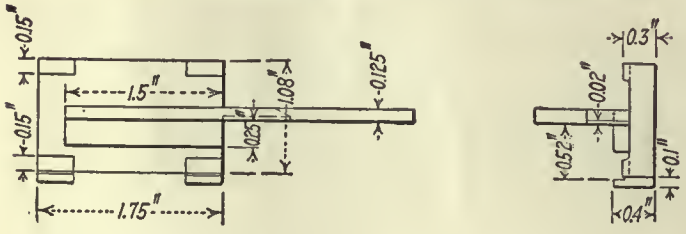

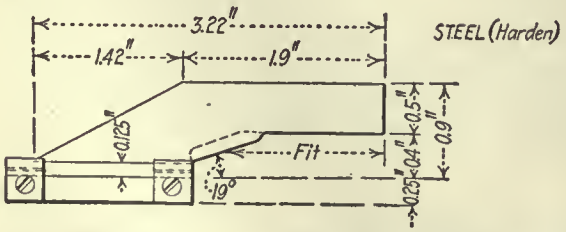

FIG.522

OPERATION 67

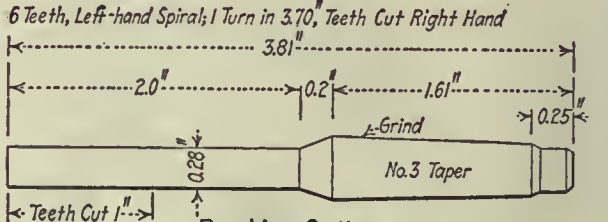

Roughing Cutter
FIG.521-A

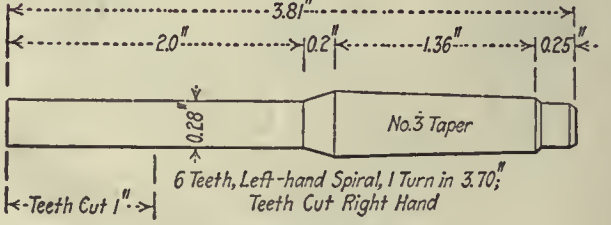

Finishing Cutter
FIG.521-B

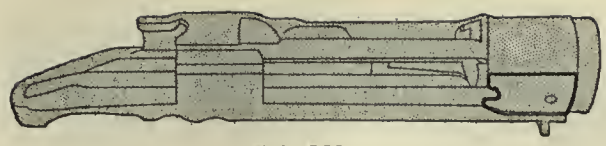

FIG 527

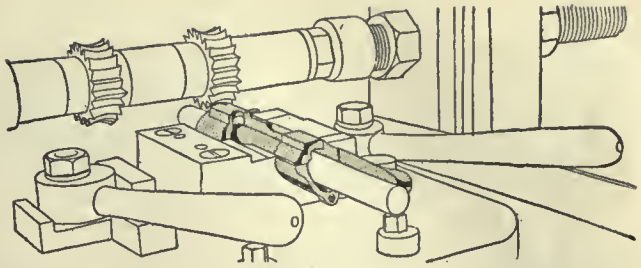

FIG. 530

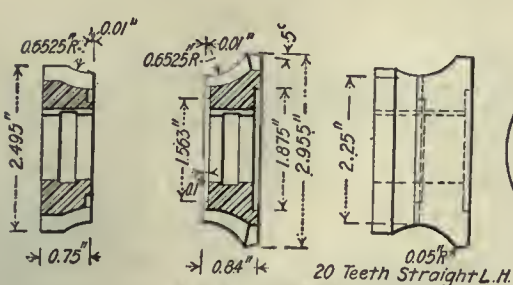

FIG. 528. OPERATION 73

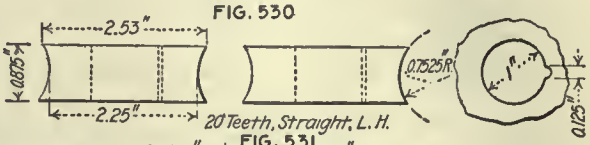

FIG. 531

FIG 529

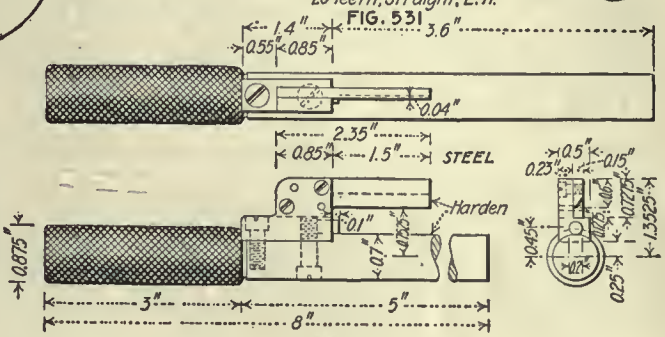

FIG. 532

OPERATION 74

FIG. 533

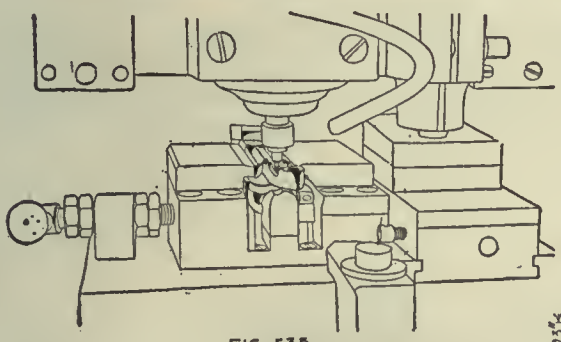

FIG. 535

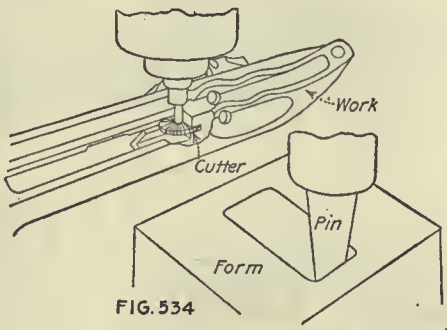

FIG. 534

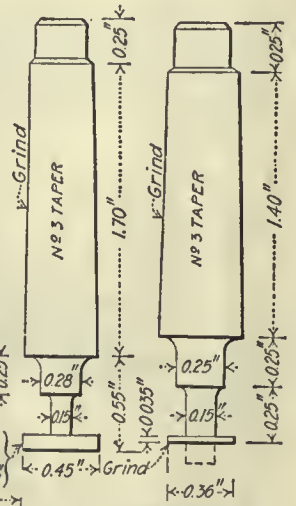

FIG. 536 A AND B

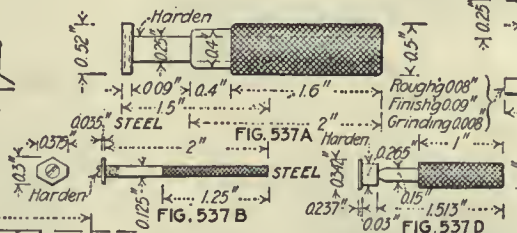

FIG. 537 A

FIG. 537 B

FIG. 537 D

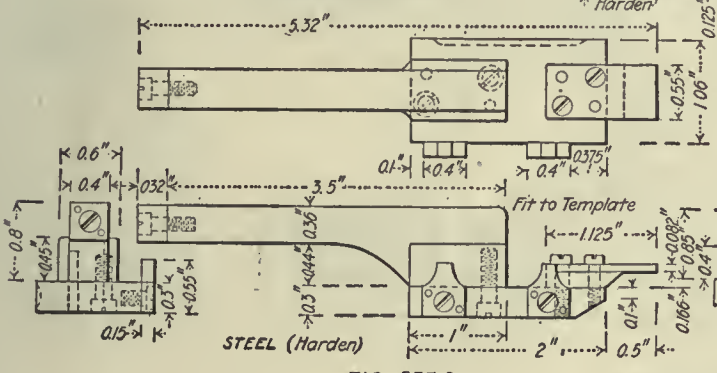

FIG. 537 C

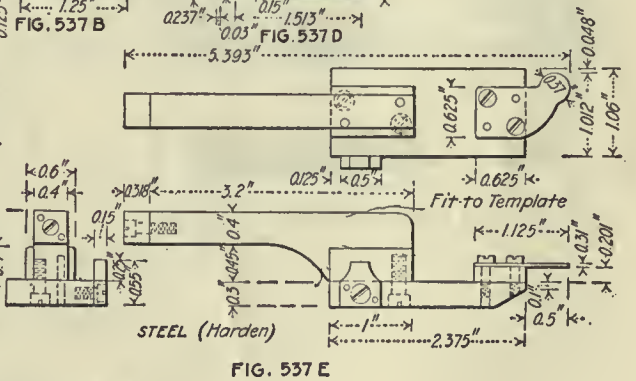

FIG. 537 E

OPERATION 75 & 76

The ideal manufacturing process is one in which handwork does not enter. Whether this is a possibility in as far as the manufacture of a certain piece is concerned, must be determined from the standpoint of financial desirability. Owing to the flexibility of the human anatomy, the replacement of some simple hand operations may involve complicated and expensive machines. However, it must be said that in so far as it has been advisable to do so, this principle has been carried out at the Springfield armory, and at a comparatively low cost.

OPERATIONS 77 AND 81. DRILLING AND COUNTERBORING FOR BOLT-STOP PIN

Transformation—Fig. 538. Machine Used—Woodward & Rogers three-spindle vertical 14-in. drilling machine. Number of Operators per Machine—One. Work-Holding Devices—Drill jig, Fig. 539. Tool-Holding Devices—Drill chuck. Cutting Tools—Fig. 540; A, combined drill and reamer; B, counterbore. Number of Cuts—Two. Cut Data—900 r.p.m.; hand feed. Coolant—Cutting oil, $\frac{1}{8}$-in. stream. Average Life of Tool Between Grindings—300 pieces. Gages—Fig. 541; A, depth; B, location and size of reamed hole. Production—70 pieces per hour. Note—Locating points, hole and right side.

OPERATION PP. REMOVING BURRS LEFT BY OPERATIONS 73, 74 AND 77

Number of Operators—One. Description of Operation—Removing burrs thrown up by operations 73, 74, 77. Apparatus and Equipment Used—File and reamer, Fig. 505. Gages—None. Production—70 pieces per hr.

OPERATION 78. HAND MILLING CUTOFF-SPRING SPINDLE NOTCH

Transformation—Fig. 542. Machine Used—Whitney Manufacturing Co. No. 6 hand miller. Number of Operators per Machine—One. Work-Holding Devices—Held by mandrel and clamp, Fig. 543. Tool-Holding Devices—Taper-shank collet. Cutting Tools—Milling cutter, Fig. 544. Number of Cuts—One. Cut Data—1,200 r.p.m., hand feed. Coolant—Cutting oil put on with brush. Average Life of Tool Between Grindings—2,000 pieces. Gages—Fig. 545. Production—175 pieces per hr. Note—Locating points, hole and side.

OPERATION 82. REAMING SEAR-PIN HOLE AND SEATING FRONT END

Transformation—Fig 546. Machine Used—Prentice speed lathe, 12 in. Number of Operators per machine—One. Work-Holding Devices—Held against stop and steadyrest on pilot of reamer, Fig. 547. Tool-Holding Devices—Held by taper shank. Cutting Tools—Fig. 549; A, facing counterbore with collar stop for end; B, reamer for sear-pin hole. Number of Cuts—One. Cut Data—125 r.p.m.; hand feed by lever A, Fig. 547. Coolant—Cutting oil. Average Life of Tool Between Grindings—2,000 pieces. Gages—Depth, Fig. 550. Production—60 pieces per hr.

FIG. 538

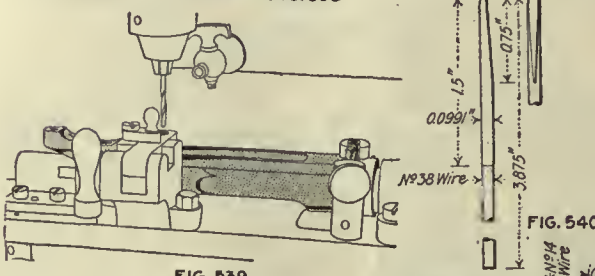

FIG. 539

FIG. 540A

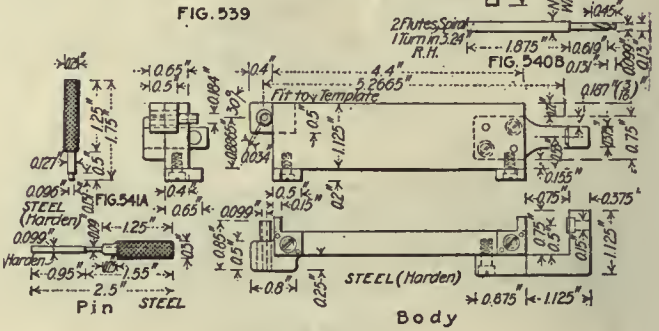

FIG. 540B

FIG. 541B

OPERATION 77 & 81

FIG. 542

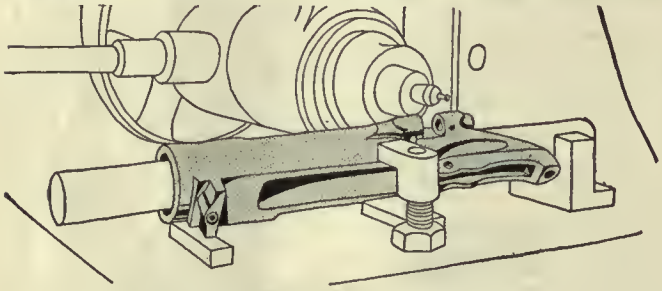
FIG. 543

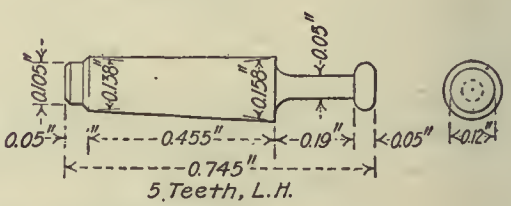

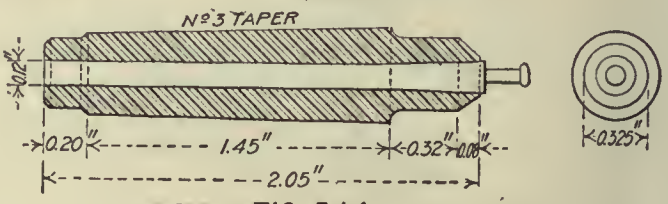

FIG. 544

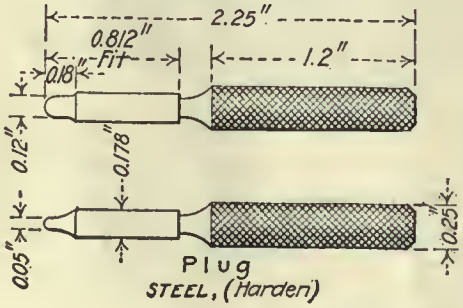

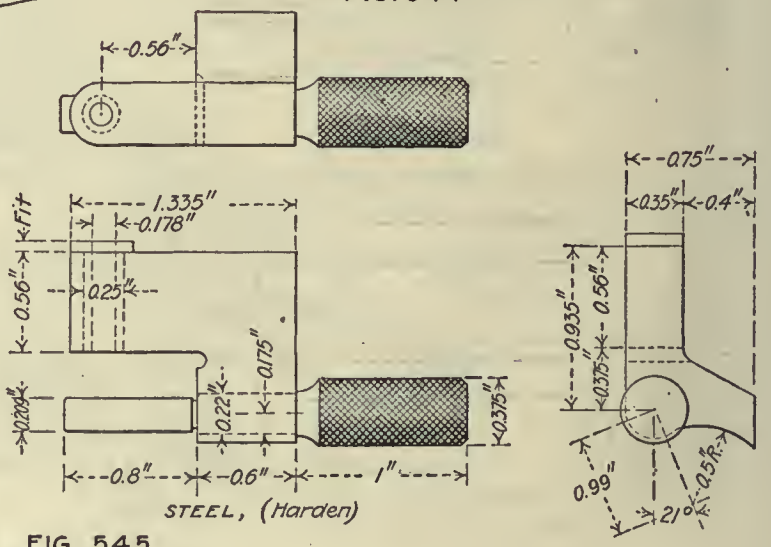

FIG. 545

OPERATION 78

OPERATION 82B. REAMING SEAR HOLE

Transformation—Fig. 546. Machine Used—Bench lathe, same as in operation 82. Number of Operators per Machine—One. Work-Holding Devices—Held by hand on pilot of reamer, Fig. 548. Tool-Holding Devices—Reamer held in drill chuck. Cutting Tools—Reamer with pilot, Fig. 549-B. Number of Cuts—One. Cut Data—Speed, 900 r.p.m.; hand feed. Coolant—Cutting oil put on with brush. Average Life of Tool Between Grindings—200 pieces. Gages—Plain plug gage for diameter only. Production—Same as operation 82.

OPERATION 82½. DRILLING THREE HOLES FOR TELESCOPE-SIGHT BRACKET

Note—These holes are drilled on sharpshooters' rifles only; the same machine and the same drill jig are used as in operation 28; a block with three bushing holes is screwed to the side of the drill jig, drilling three holes on the left side.

FIG. 546

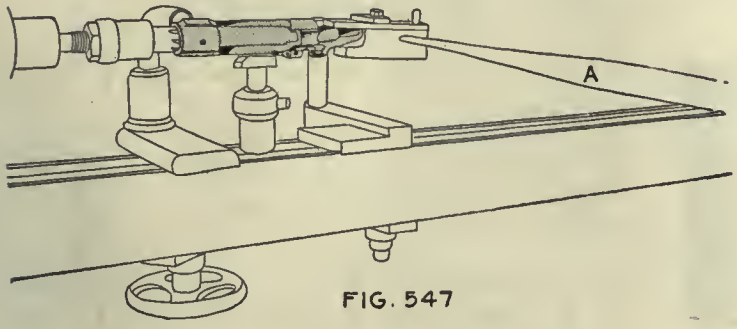

FIG. 547

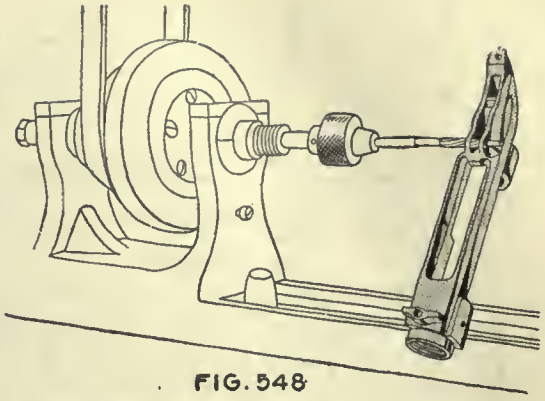

FIG. 548

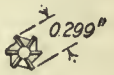

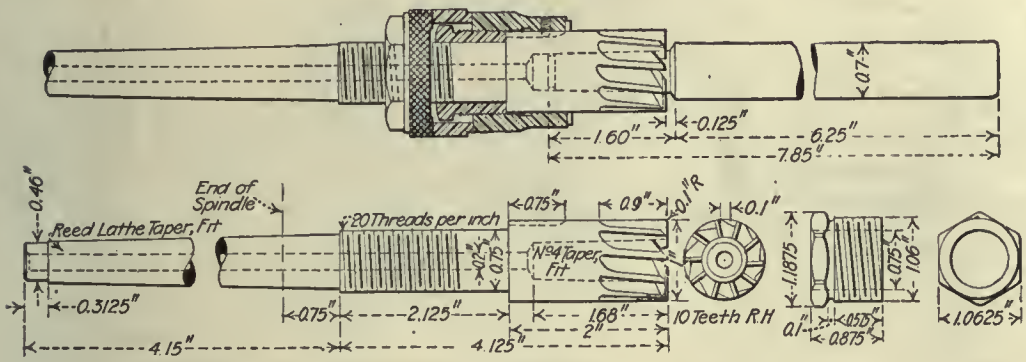

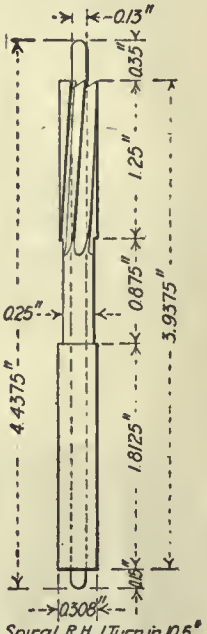

FIG. 549 B

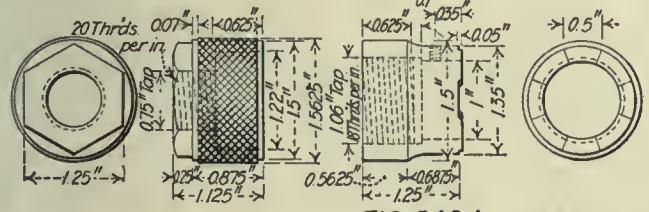

FIG. 549 A

OPERATION 82

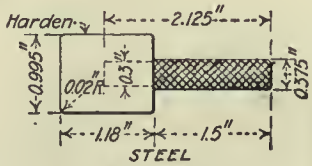

FIG. 550

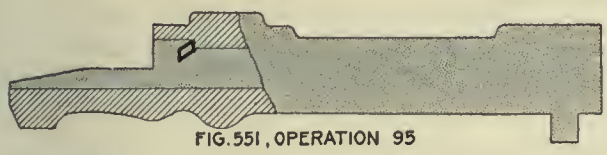

FIG. 551, OPERATION 95

FIG. 552

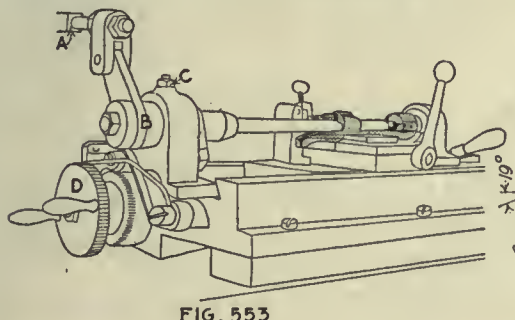

FIG. 553

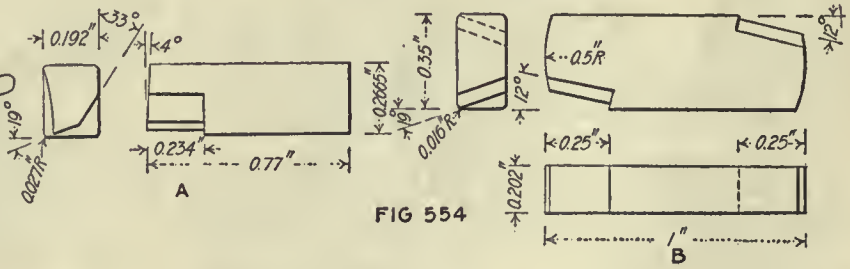

FIG 554

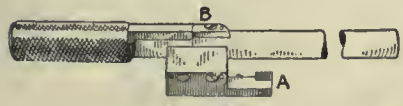

FIG. 555 A

FIG 555 B

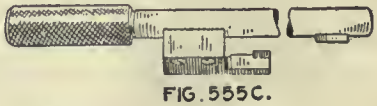

FIG. 555C.

OPERATION 95 & 95½

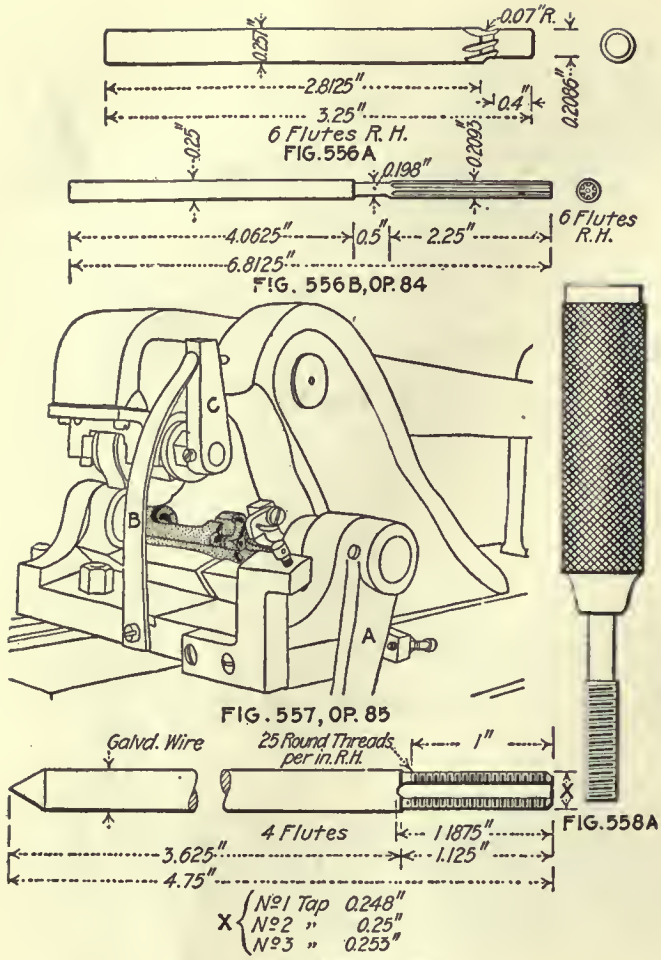

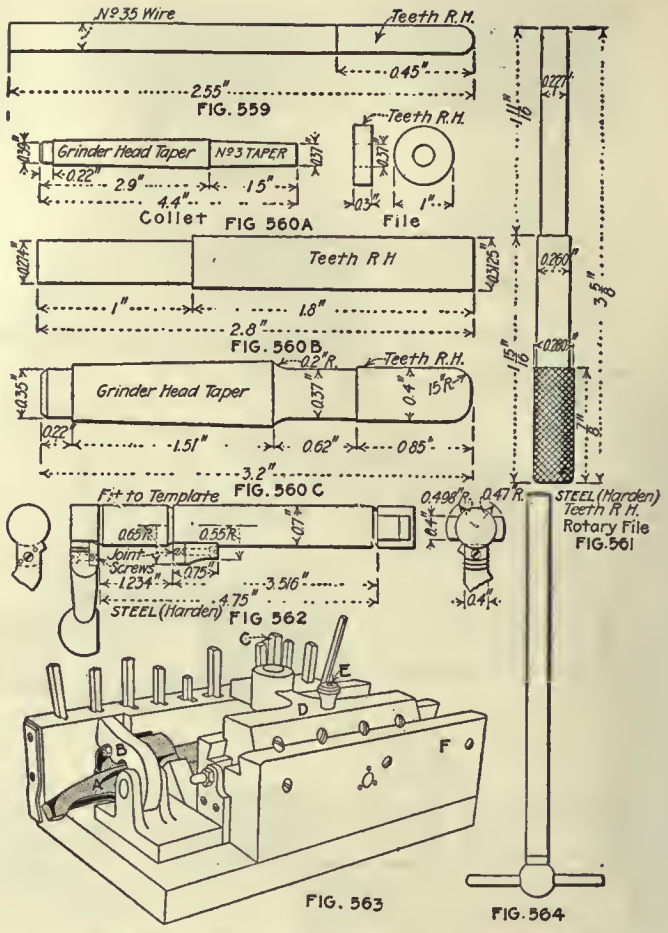

FIG. 559, OP 86 - FIG. 560A, 560B, 560C, OP 87 - FIG 561, 562, 563 OP. 96 - FIG. 564 OP. 94½

OPERATIONS 95 AND 95½. SHAVING FOR EXT. CAM

Transformation—Figs. 551 and 552. Machine Used—Double-ended machine made at Hill shops, Fig. 553; bar rocked by connecting-rod A; moved back and forth by cam cut in B, working on stud C. Number of Operators per Machine—One. Work-Holding Devices—Held on stud at front and by vise. Tool-Holding Devices—Osciliating bar. Cutting Tools—Shaving cutter, Fig. 554; A, for extractor cam; B, for front locking cams. Cut Data—Speed, 75 strokes per minute; feed, 0.005 per min.; ratchet feed mechanism shown at D, Fig. 553. Coolant—Cutting oil put on with brush. Average Life of Tool Between Grindings—250 pieces. Gages—Fig. 555-A; plug goes in hole, arm A rests against right side and B fits against cam, while a straight-edge measures across front end; Figs. 555-B and 555-C, front-cam gages used in same way. Production—45 pieces per hr. Note—Locating points, hole and bottom.

OPERATION 95¾. REMOVING BURRS

Number of Operators—One. Description of Operation—Removing burrs thrown up by operations 95 and 95½. Apparatus and Equipment Used—Scraper. Production—250 per hr.

OPERATION 83. POLISHING CIRCLE, FRONT END

Number of Operators—One. Description of Operation—Polishing front end for stamping. Apparatus and Equipment Used—Polishing jack and wheel. Production—80 pieces per hr.

OPERATION 84. REAMING AND COUNTERSINKING CUT-OFF SPINDLE, JOINT-PIN, EJECTOR-PIN AND GAS HOLES

Machine Used—Prentice speed lathe, 14 in. Number of Operators per Machine—One. Work-Holding Devices—Held in hands. Tool-Holding Devices—Drill chuck. Cutting Tools—Countersink and reamer, Figs. 556-A and 556-B. Number of Cuts—One. Cut Data—Speed, 900 r.p.m.; hand feed. Coolant—Cutting oil put on with brush. Average Life of Tool Between Grindings—2,000 pieces. Gages—None. Production—80 pieces per hr. Note—Practicaliy a burring job.

OPERATION 85. STAMPING

Number of Operators—One. Description of Operation—Stamping "U. S. Springfield Armory, Model 1903"; work rotated by handle A, Fig. 557. Apparatus and Equipment Used—Roll stamping machine, made at Hill shop, Fig. 557; supporting fixtures as shown; stamping roll controlled by spring B against arm C. Production—120 per hr.

OPERATION 93. TAPPING GUARD-SCREW HOLES

Number of Operators—One. Description of Operation—Tapping screw holes for guard. Apparatus and Equipment Used—Vise; holding fixture and hand brace; taps, Fig. 558, three in set. Gages—558-A. Production—40 receivers per hr.

OPERATION 86. ROTARY FILING CUTOFF-SPRING GROOVE

Transformation—Same as Fig. 428. Number of Operators—One. Description of Operation—Filing out groove. Apparatus and Equipment Used—Prentice speed lathe, 12 in.; rotary file to round shape of groove, Fig. 559. Production—85 per hr.

OPERATION 87. ROTARY FILING UNDER SIDE OF TANG

Number of Operators—One. Description of Operation—Rotary filing; blending side cuts together and filing under side of tang and filing groove on under side of tang. Apparatus and Equipment Used—Rotary file with taper shank; files are hand cut, made at Hili shops, Fig. 560; A, under side of tang; B, thumb cut; C, rear of front circle. Production—20 per hr.

OPERATION 96. FILING TOP OF RIGHT WALL, ETC.

Number of Operators—One. Description of Operation—Filing and blending cuts together and filing corners. Apparatus and Equipment Used—Rotary and flat files; rotary in Fig. 561. Gages—Fig. 562; this is practically a finished bolt with hardened lugs and distance pieces. Production—7 per hr.

OPERATION 88. STAMPING SERIAL NUMBER

Number of Operators—One. Description of Operation—Stamping serial number. Apparatus and Equipment Used—Hand stamp and hammer with work-holding fixture, Fig. 563; receiver A is held by finger clamp B; stamp C fits in guide in slide D; this is moved by handle E; there is a ratchet beneath slide, and there are guide lines at F. Production—120 per hr.

OPERATION 89. POLISHING ALL OUTER SURFACES

Number of Operators—One. Description of Operation—Polishing all top surfaces that show. Apparatus and Equipment Used—Polishing jack and wheel. Production—10 pieces per hr.

OPERATION 90. FILING AND GENERAL CORNERING

Number of Operators—One. Description of Operation—General filing and cornering. Apparatus and Equipment Used—Hand file. Production—6 pieces per hr.

OPERATION 91. CASEHARDENING

Description of Operation—Packed in new, whole bone, heated to 750 deg. C. (1,382 deg. F.) and heated for 2½ to 3 hr. Apparatus and Equipment Used—Brown & Sharpe furnaces for crude oil, 10 to 14 lb. air pressure; firebox 30x48 in.; cast-steel boxes hold 42 receivers; quenched in oil.

OPERATION 91-A. SAND BLASTING

Description of Operation—Only used when scale forms in casehardening or when work comes in for repair. Apparatus and Equipment Used—Sand-blast house.

OPERATION 94½. POLISHING WELL

Description of Operation—Hold receiver in hand and push well over a special lap. Apparatus and Equipment Used—Bench lathe or polishing head. Gages—Fig. 564. Production—80 per hr.

OPERATION 92. ASSEMBLING WITH BOLT STOP

Number of Operators—One. Description of Operation—Assembling bolt stop to receiver. Apparatus and Equipment Used—Handwork. Production—400 per hr.

Machining Operations on the Bolt

Next to the receiver, the bolt is probably the most difficult piece in the whole rifle. It is of odd shape and one of the unexplained features of design is the slight bend given to the bolt handle after the handle itself has been turned in a lathe. This as can be seen in the detail in Fig. 565 only gives an offset of less than 12 degrees and seems to be solely for appearance.

The bolt, which fits inside the receiver, holds the cartridge in position in the chamber and against the recoil of the powder charge. It is a drop forging of Class C steel, 0.89x0.70 rectangular section, in multiples of 7⅛ in. It is shown in detail in Fig. 565. The blanks are first heated and bent, as in Fig. 565A, then drop-forged in the dies shown in Fig. 567. Then follow the usual trimming and pickling, after which the ends are milled and the hole is drilled. This hole becomes the first working point for future operations. After the under side of the handle is milled in operation 12 it becomes a very import-

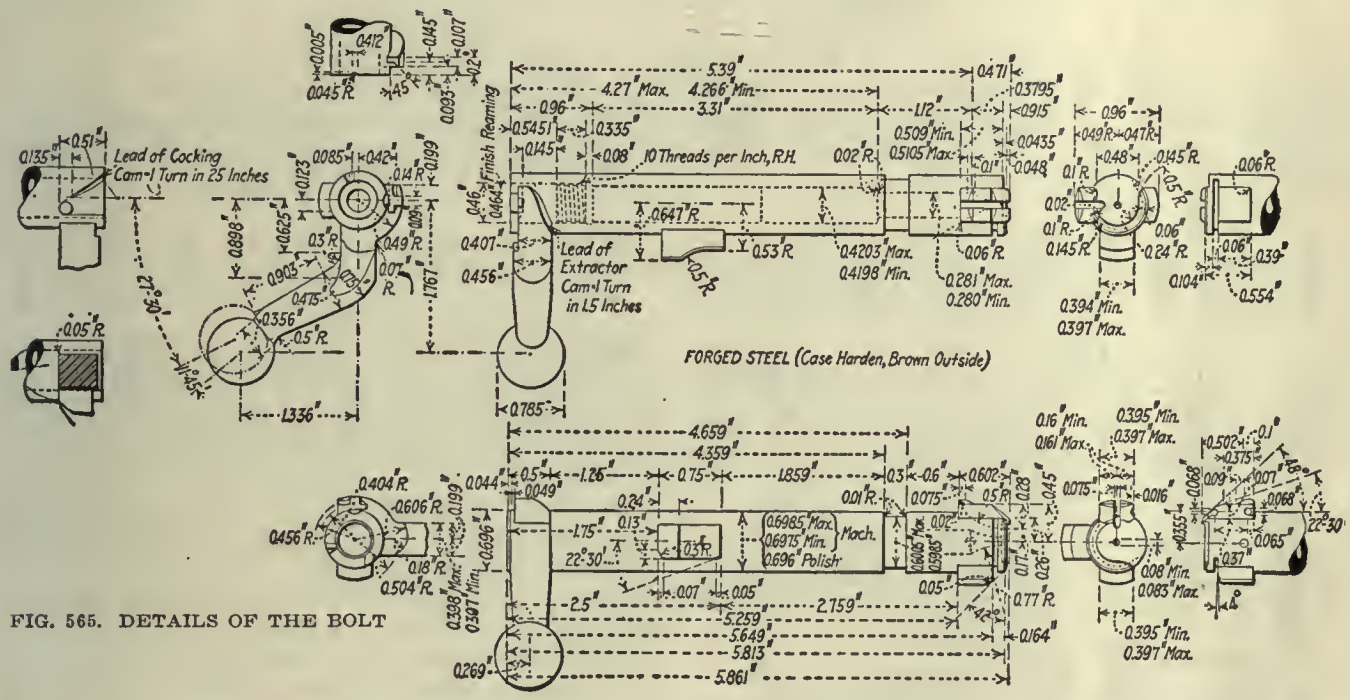

FIG. 565. DETAILS OF THE BOLT

OPERATIONS ON THE BOLT

A	Blocking from billet
A–1	Pickling
C	Trimming
D	Dropping to finish
D-1	Pickling
E	Trimming
F	Dropping to finish and twist
G	Annealing
G-1	Pickling
1	Milling ends
2	Drilling firing-pin hole
3½	Drilling striker hole
43	Drilling and shaping striker seat
AA	Reaming striker point hole, to finish (hand)
5	Countersinking front end in lathe
6	Facing rear end in lathe
7	Clamp milling handle (Watershop)
8	Turning body, roughing
10	Turning lugs, front and rear, and front of handle on bolt
9	Turning body to finish
11	Burring
12	Milling body, under side and top of handle, and extracting cam
13	Milling right and left side of safety lug
14	Milling right and left side of locking lugs
19	Hand milling to remove stock left by operations 12 and 13
15-24	Hand milling front end of bottom lug and top of locking lugs
20	Milling rear of handle to gage
46-39	Group capacity
48	Hand milling sides of locking lugs
BB	Removing burrs from rear lugs and under handle
CC	Stamping stock mark
23	Hand milling rear corners of rear lug
32	Drilling gas and bolt stop pin holes
16–19½	Turning bevel, front end, and for extractor collar
DD	Removing burrs from extractor-collar groove
21–28–29	Milling and counterboring for sleeve, and milling for safety lock
25–26	Profiling extractor cam, rough and finish
FF	Removing burrs left by operation 28 with facing tool
GG	Removing burrs left by operation 21, filing
36	Hand milling for cock-notch
32½–33	Hand milling for sleeve lock
22	Hand milling top of handle
27	Hand milling extractor groove
34	Hand milling sleeve stop
35	Hand milling for sleeve lock
31	Tapping for sleeve
37	Hand milling for cocking cam, roughing
38	Hand milling for cocking cam to finish
JJ	Removing burrs left by operation 38 with reamer
39	Milling to remove stock, front end (run with operations 20 and 46)
44	Hand milling top of upper locking lug
40–41	Hand milling ejector slot top and bottom
LL	Removing burrs from well with reamer
44½	Removing burrs with hand tool, rear of front lugs
45–45½	Counterboring for head space, rough and finish
46	Milling front end to finish
47	Profiling to finish (matching head and space)
KK	Removing burrs left by operation 46 with hand space tool
58	Bending handle
59	Reaming firing-pin hole
64	Filing cam, fitting to receiver and general cornering
53	Casehardening
54	Assembling with extractor collar
55	Freeing extractor collar in speed lathe
56	Filing ears of extractor collar
52	Polishing surface
57	Burring bolt stop notches (with oilstone)
65	Browning

ant working point and is used on nearly all future operations. The body is turned with relation to this surface, so that the handle will come to its seat in the correct position. These parts and the back end of the bolt give the measuring points from which all the other parts are gaged when making the various inspections required.

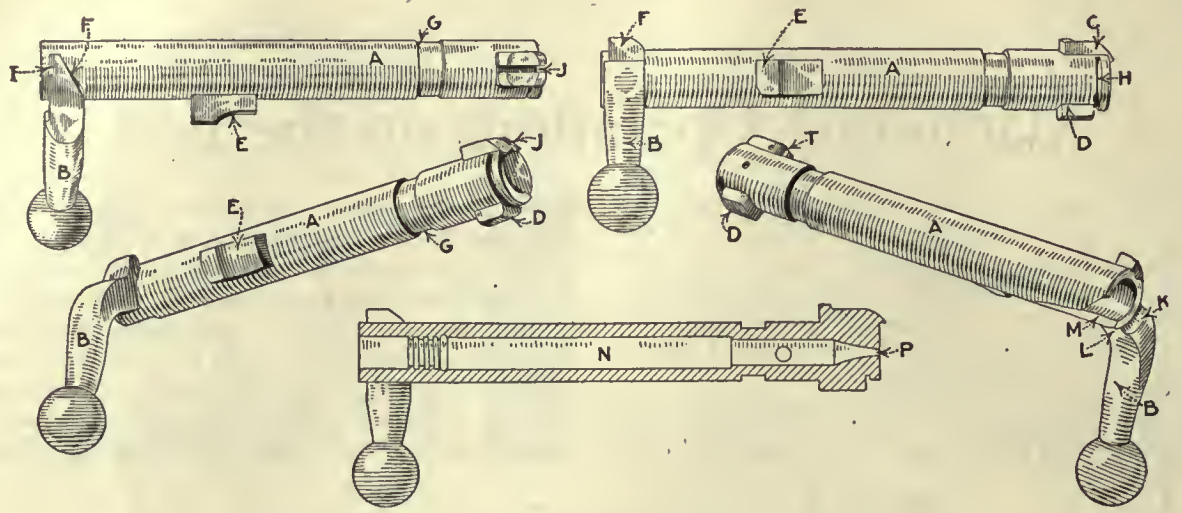

MAIN OPERATIONS ON BOLT

A—Body. Operations 8 and 9
B—Handle. Operations 7 and 58
C—Upper locking lug. Operations 14, 15, 24 and 44
D—Lower locking lug
E—Safety lug. Operations 10 and 13
F—Extractor cam. Operations 25 and 26
G—Extractor collar groove. Operations 16 and 19½
H—Extractor groove. Operation 27
I—Sleeve lock notch. Operations 32½ and 33
J—Ejector groove. Operations 40 and 41
K—Sleeve stop. Operation 34
L—Under side of handle. Operation 12
M—Cocking cam. Operations 37 and 38
N—Firing-pin hole. Operation 2
O—Striker hole. Operation 3½
P—Striker point hole. Operation AA

OPERATION A. BLOCKING FROM BILLET

Transformation—Fig. 565-A. Number of Operators—One. Description of Operation—Blocking from bar, breaking down and bending. Apparatus and Equipment Used—Billings & Spencer 400-lb. drop hammer, two dies and bending block at right, Fig. 566. Production—40 per hr.

OPERATION A-1. PICKLING

Number of Operators—One. Description of Operation—Pickling: 1 part sulphuric acid to 9 parts water, same as on the receiver; the pickling time varies from 10 to 15 min., the same as on the receiver. Apparatus and Equipment Used—Wooden pickling tanks and wire-mesh baskets. Note—This is to be discontinued, but the same process will form operations D-1 and G-1.

OPERATION C. TRIMMING

Note—Abandoned.

OPERATION D. DROPPING TO FINISH

Transformation—Fig. 567. Number of Operators—One. Description of Operation—Dropping to finish. Apparatus and Equipment Used—800-lb. Billings & Spencer drop hammer and one pair of drop dies. Production—40 per hr.

OPERATION D-1. PICKLING

Note—Same as operation A-1.

OPERATION E. TRIMMING

Transformation—Fig. 568. Machine Used—Perkins back-geared press, 3-in. stroke. Number of Operators per Machine—One. Punches and Punch Holders—Trimming punch and die punch have a square shank. Dies and Die Holders—Die set in shoe and held by setscrews. Stripping Mechanism—None; pushed through die. Average Life of Punches—50,000 pieces. Lubricant—None. Production—600 per hr. Note—One operation only on trimming.

OPERATION G. ANNEALING

Number of Operators—One. Description of Operation—This is annealed in powdered charcoal in iron pots at a temperature of 820 deg. C. (1,508 deg. F.); the heat is shut off gradually as the temperature approaches the prescribed limit and is allowed to cool slowly. Apparatus and Equipment Used—Brown & Sharpe oil-burning furnaces, same as on receiver.

OPERATION G-1. SECOND PICKLING

Note—Same as operation D-1.

OPERATION F. DROPPING TO FINISH AND TWIST

Transformation—Fig. 569. Number of Operators—One. Description of Operation—Dropping and twist. Apparatus and Equipment Used—Billings & Spencer 400-lb. drop hammer, dies shown in Fig. 570. Production—100 per hr. Note—First twist of handle is done in foot vise, to allow bolt to sit in dies without rocking.

OPERATION 1. MILLING ENDS

Transformation—Fig. 571. Machine Used—Pratt & Whitney No. 2 Lincoln miller, Fig. 572. Number of Machines per Operator—One. Work-Holding Devices—Special vise, Fig. 573; work located endwise against hardened stop A; cam D draws swiveling jaw C with the work against the fixed jaw B. Tool-Holding Devices—Standard arbor. Cutting Tools—Two side-milling cutters, Fig. 574. Number of Cuts—One. Cut Data—Speed, 60 r.p.m.; ⅝-in. feed. Coolant—Cutting oil, put on by brush. Average Life of Tool Between Grindings—2,000 pieces. Gages—Fig. 575. Production—20 per hr.

Owing to the right-angle bend that the handle makes with the body of the bolt, the breaking-down operation is quite important; then, too, the bend in the handle itself requires careful attention.

The drilling resembles the work on the gun barrels, except that a vertical instead of a horizontal machine is used and the hole is much shorter. The form of drill employed is practically the same as that used for the barrels.

The machining of the bolts, however, has a number of interesting features that are not commonly found in ordinary machining operations. These are the methods used in turning the handle and the body of the bolt, as well as the outside of the locking lugs.

The handle is machined by what is in reality a turning operation, using two formed cutting tools, one at the back and one at the front. These tools are forced onto the work by means of right- and left-hand screws, as shown in Fig. 599, the tools themselves being shown in detail in Fig. 600. The bolt itself is held with a handle in line with the center of the lathe, by a special chuck that locates the hole in the bolt at right angles to the handle and drives it for the turning, or "clamp milling," as it is called here. This is done in a special machine belonging to the lathe family and built at the Hill shops.

The body is turned in millers of the Lincoln type, the bolt being driven by the miller spindle and supported at the outer end by a special center, as shown in Fig. 603. The tool is held on the table of the miller and fed under the work by the regular table feed. The cutter is of the regular flat forming type, made in sections to pass to each side of the safety lug and with the cutting edge at an angle to give a shearing cut. This is shown in Fig. 606. The lubricating of this broad cut is something of a problem, especially if the stock is tough, as sometimes happens. Both cutting oils and soda cutting compound are used, depending on the stock to be cut. In some cases the compound answers best and gives a smooth.

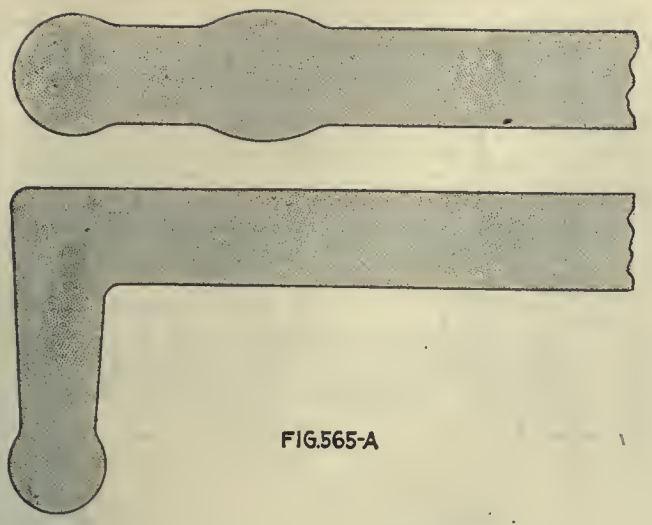

FIG.565-A

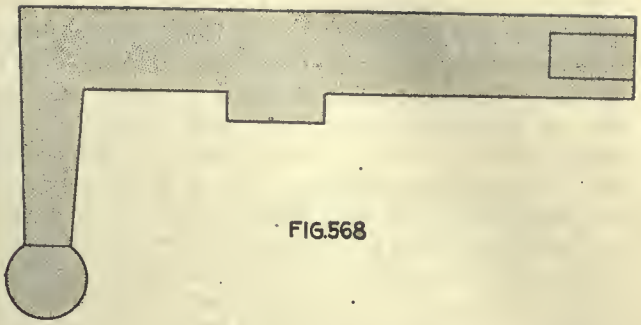

FIG.568

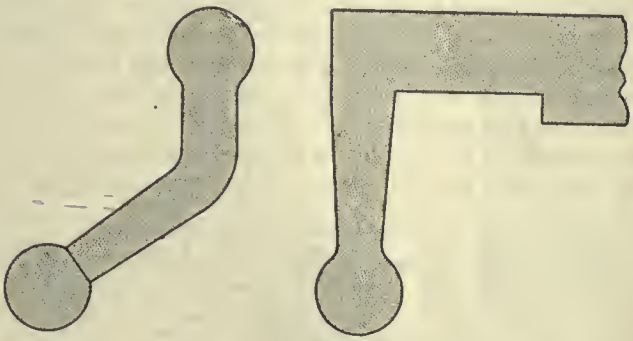

FIG.569

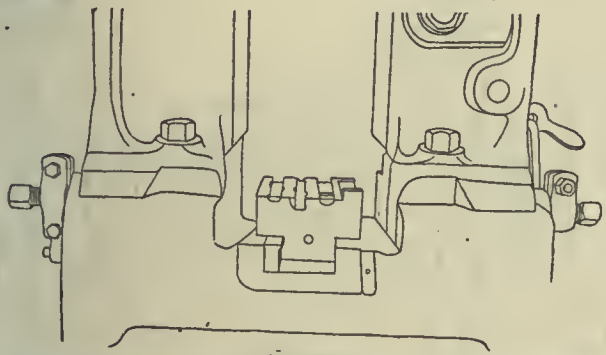

FIG.566

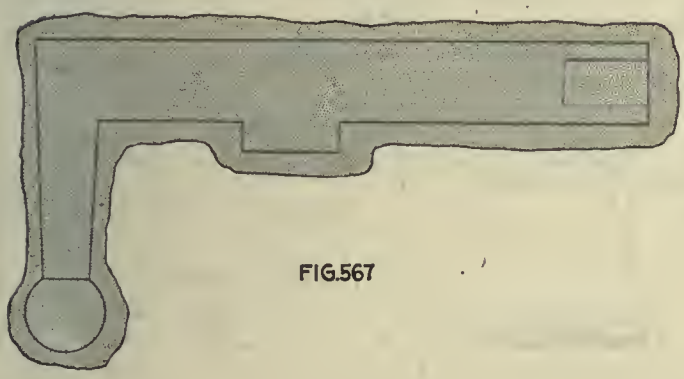

FIG.567

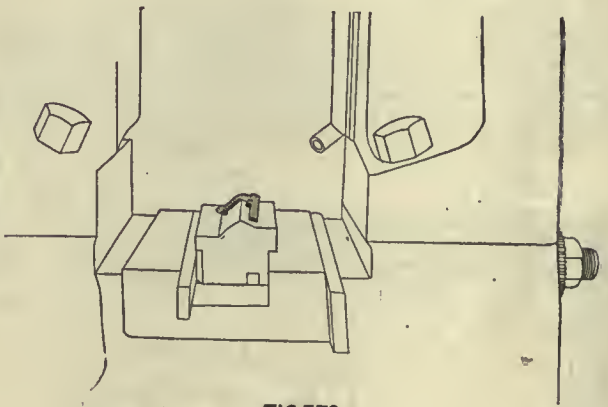

FIG.570

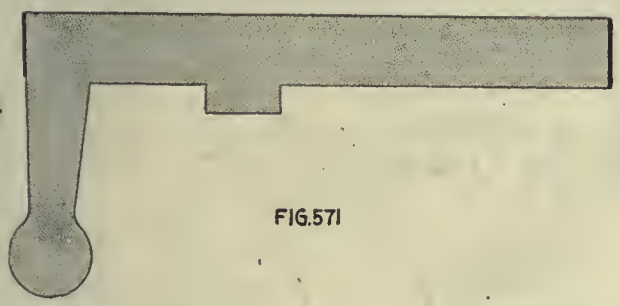

FIG.571

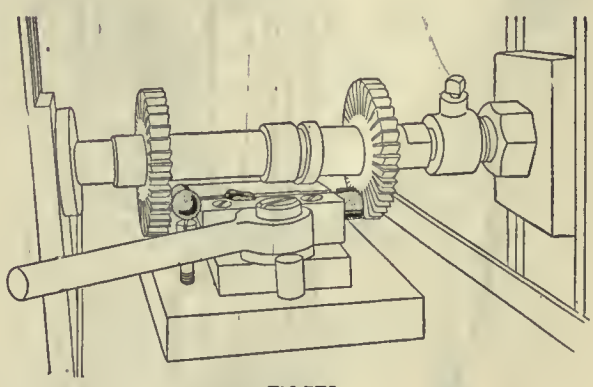

FIG.572

bright finish; in others the addition of more or less oil gives better results. In all cases the work is flooded for best results.

The diameter of the body is quite important, as it fits the small arcs of the well hole, or bore, of the receiver left by the various milling operations. This guides the bolt in its action, while the lugs slide through their respective slots and lock against their shoulders in the receiver. These lugs are faced by the same cutters as turn the body, which locates them in proper relation to the handle and the end of the bolt.

The lugs are milled with relation to the body, both in order to serve the proper thickness and to blend with the round body of the bolt itself. This makes it necessary to accurately locate the bolt with relation to the cutter, and even then requires a slight amount of drawfiling.

Profiling the cards on the lugs, and also the sleeve stop at the handle end of the bolt, are interesting operations. In fact, the functions performed by the various portions of the bolt make it a very important piece of mechanism in the operation of the rifle. Its proper action makes the arm extremely effective and its failure renders it useless. In this connection the ease with which the bolt, firing pin and cocking piece can be disassembled and rendered useless is one of the good, even brilliant features of its design.

The drilling of the firing-pin hole as performed in operation 2 is another example of the use of simple fixtures in connection with Pratt & Whitney upright drills. The cutting speed on the work is 600 r.p.m. and that the cut is rather severe is indicated by the fact that fifteen pieces only are averaged to a grinding. The drilling of the striker hole in operation 3½ is not as severe a test as the above on the endurance of the cutting edge of the tool, in spite of the fact that a speed of 900 r.p.m. is used with the same feed as above. This latter operation is

OPERATION 2. DRILLING FIRING-PIN HOLE

Transformation—Fig. 576. Machine Used—Pratt & Whitney upright drill, Fig. 577. Number of Machines per Operator—10. Work-Holding Devices—Drilling fixture, Fig. 578. Tool-Holding Devices—Drill held in collet by setscrew in carriage of machine. Cutting Tools—Barrel drill, Fig. 579. Cut Data—Speed, 600 r.p.m.; $\frac{5}{16}$-in. feed. Coolant—Cutting oil, ¼-in. stream. Average Life of Tool Between Grindings—15 pieces. Gages—Fig. 580. Production—3 per hr. per machine; 30 per hr. per operator.

OPERATION 3½. DRILLING STRIKER HOLE

Transformation—Fig. 581. Machine Used—Pratt & Whitney barrel driller. Number of Machines per Operator—Three. Work-Holding Devices—Revolving fixture, Fig. 582. Tool-Holding Devices—Setscrew in carriage of machine. Cutting Tools—Barrel drill, Fig. 583. Number of Cuts—One. Cut Data—Speed, 900 r.p.m.; $\frac{5}{16}$-in. min. feed. Coolant—Cutting oil. Average Life of Tool Between Grindings—35 pieces. Gages—Fig. 584. Production—12 per hr. per machine.

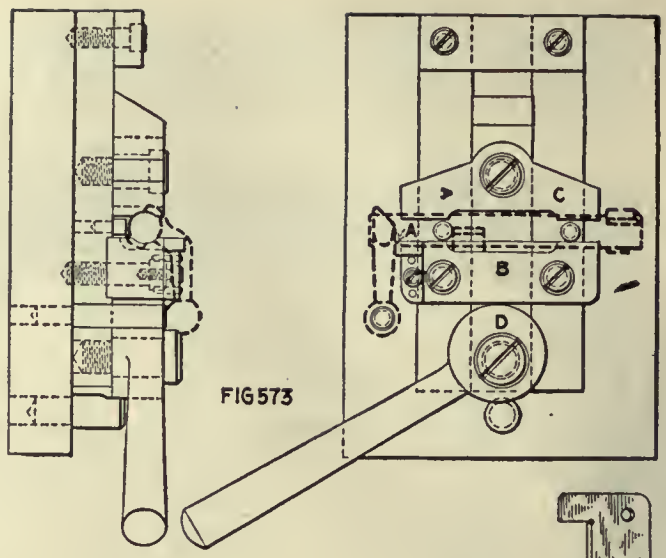

FIG 573

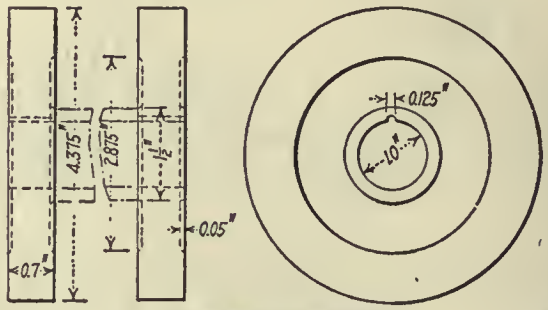

Cut Teeth on Sides and Face, 36 Teeth

FIG.574

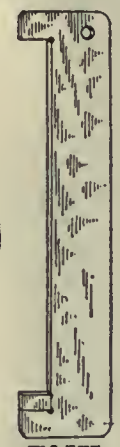
FIG.575

OPERATION 1

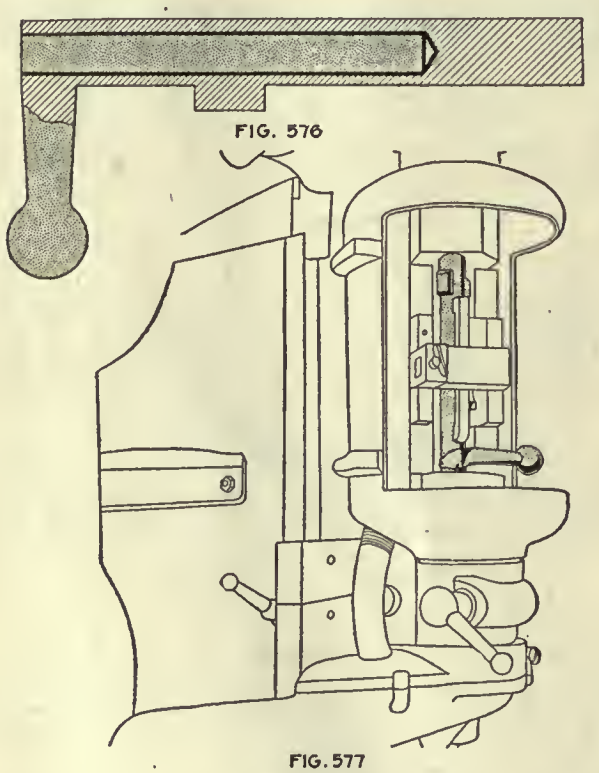
FIG. 576

FIG.577

OPERATION 2

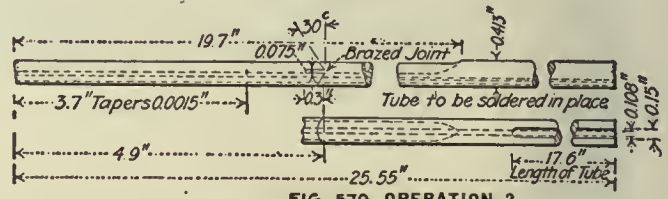

FIG. 579 OPERATION 2

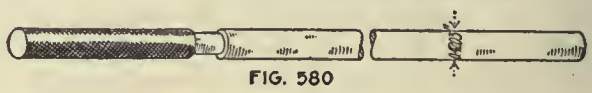
FIG. 580

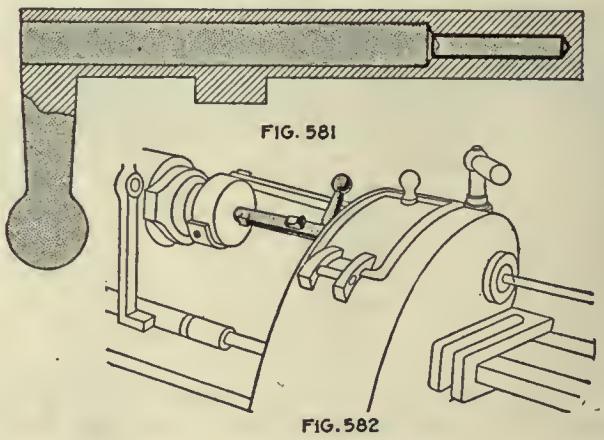
FIG. 581

FIG. 582

OPERATION 3½

an adaptation of the barrel-drilling machine for comparatively short-hole drilling. Apparently it is capable of rather a high rate of production on this class of work and may be said to do this job efficiently although possibly not from the viewpoint of floor-space efficiency, considering that the larger part of the bed of the machine is not utilized. It is, however, a very good example of the adaptation of work to machines intended primarily for

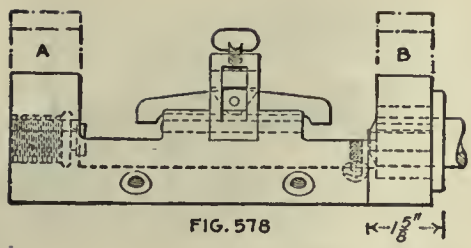

FIG. 578

OPERATION 2

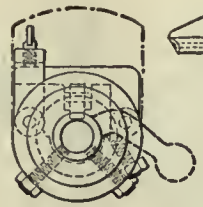

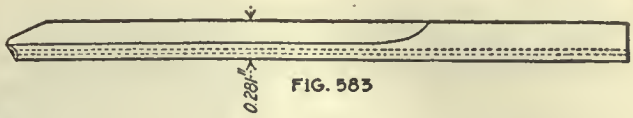

FIG. 583

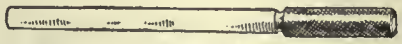

FIG. 584

OPERATION 3½

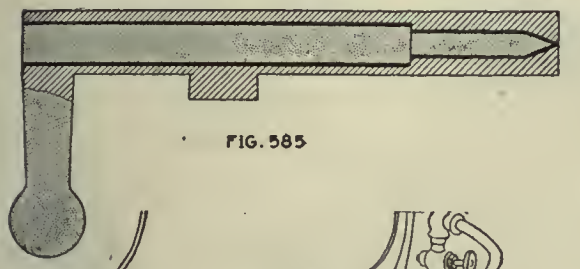

FIG. 585

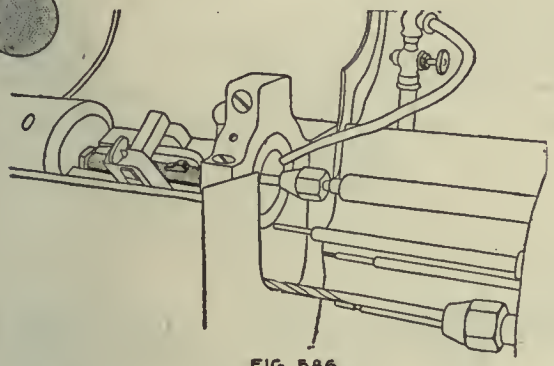

FIG. 586

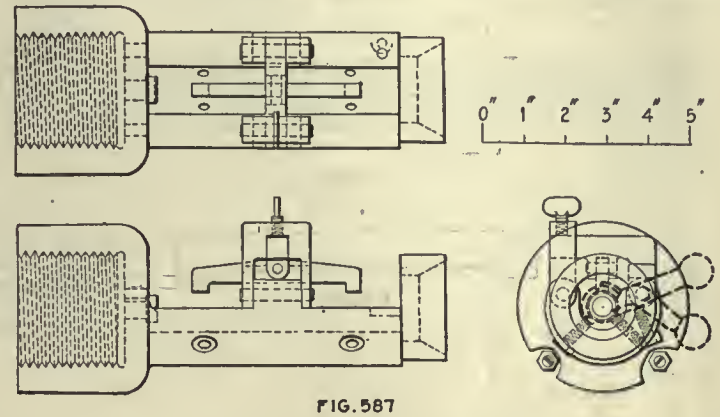

FIG. 587

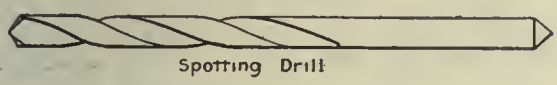

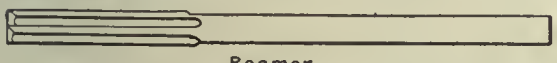

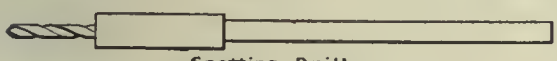

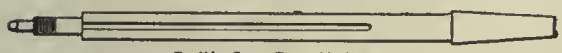

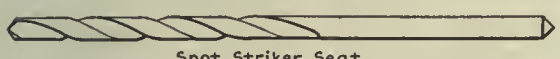

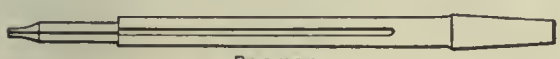

FIG. 586A

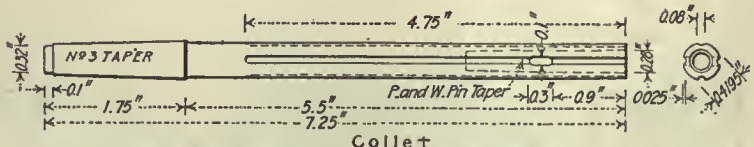

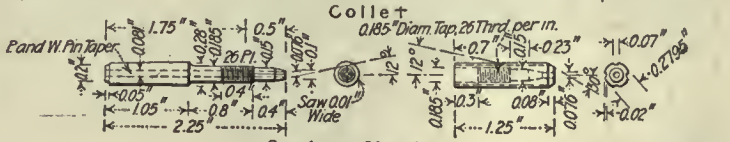

FIG. 588A

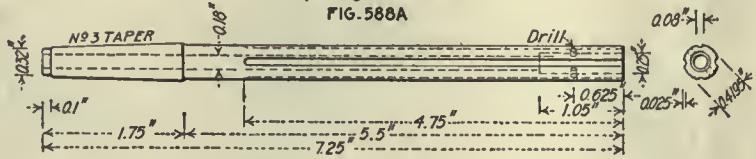

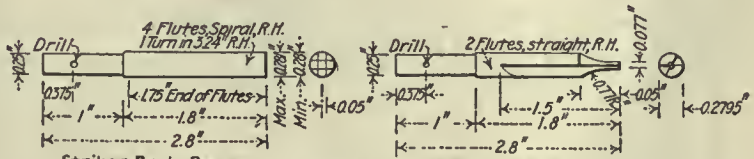

FIG. 588B

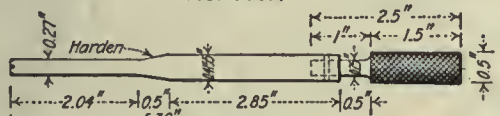

FIG. 589A

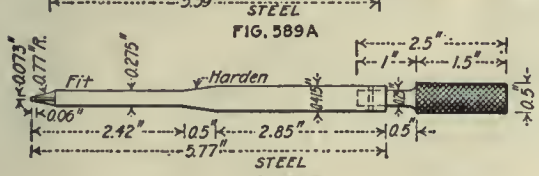

FIG. 589B

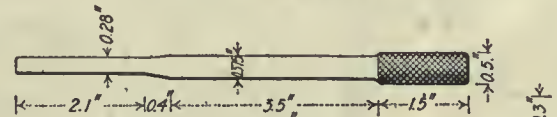

FIG. 589C

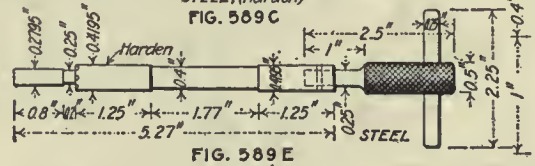

FIG. 589E

FIG. 589D

OPERATION 43

OPERATION 43. DRILLING AND SHAPING STRIKER SEAT

Transformation—Fig. 585. Machine Used—Pratt & Whitney hand screw machine, 16-in., Fig. 586; machining diagram, Fig. 586-A. Number of Operators per Machine—One. Work-Holding Devices—Revolving fixture, Fig. 587. Tool-Holding Devices—Drills in turret of machine. Cutting Tools—Two drills, one countersink, one bottoming drill and two small drills, Fig. 588; A, drill holder for striker point hole; B, reaming striker point hole. Cut Data—Speed, 640 r.p.m. and 320 r.p.m.; hand feed. Coolant—Cutting oil, ¼-in. stream. Average Life of Tool Between Grindings—300 pieces. Gages—Fig. 589; A, depth of straight part; B, depth on curve; C, size and direction; D, position of striker point hole; E, diameters and depth. Production—75 per hr.

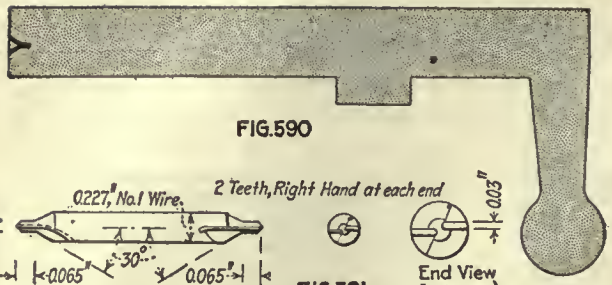

FIG.590

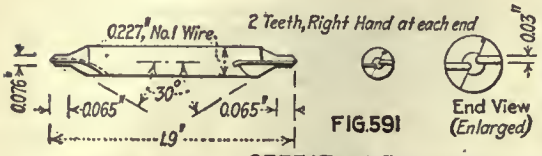

FIG.591

OPERATION 5

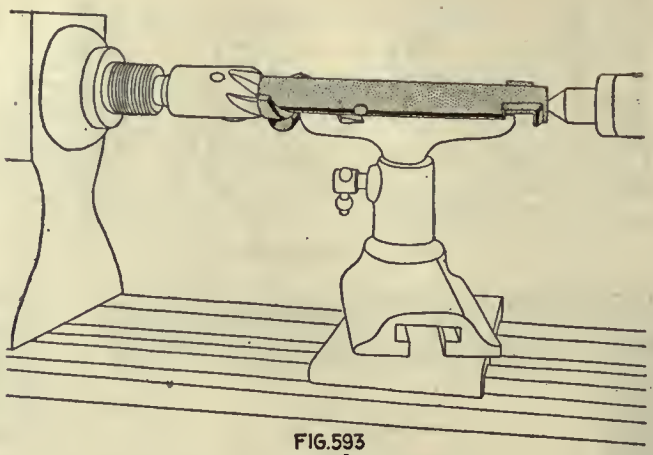

FIG.593

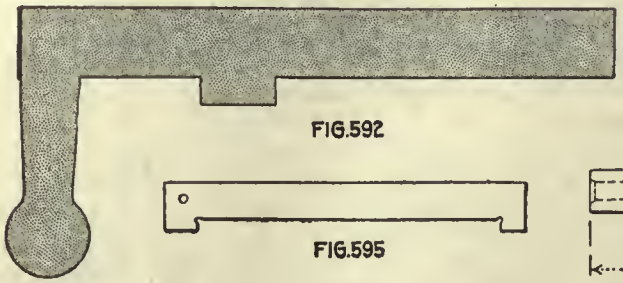

FIG.592

FIG.595

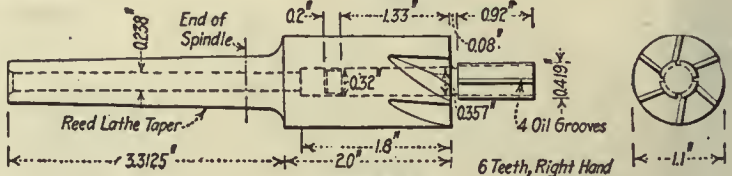

FIG.594

OPERATION 6

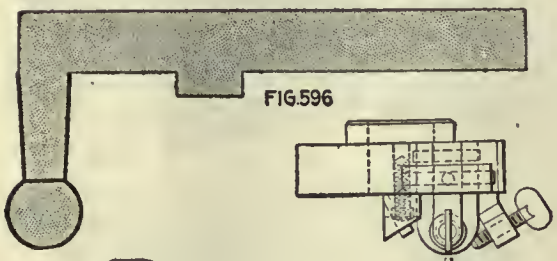

FIG.596

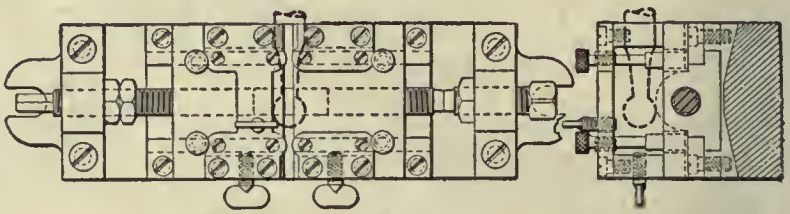

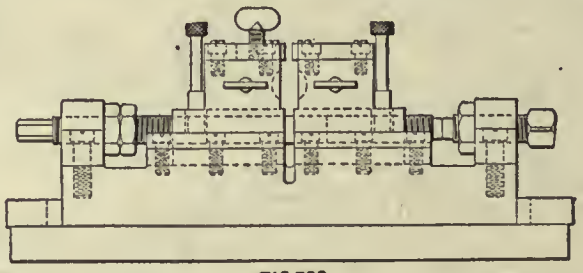

FIG.599

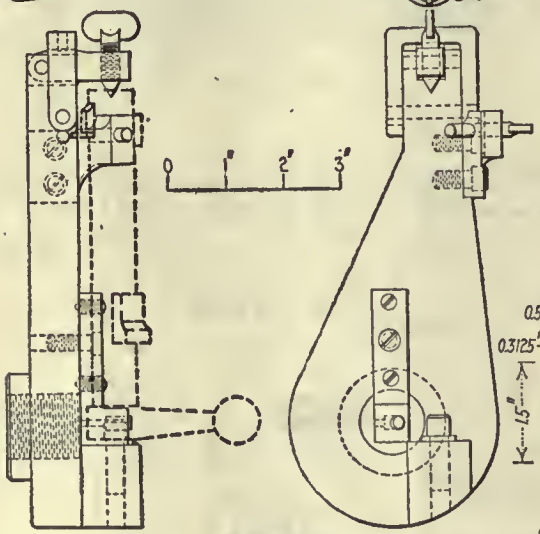

FIG.598

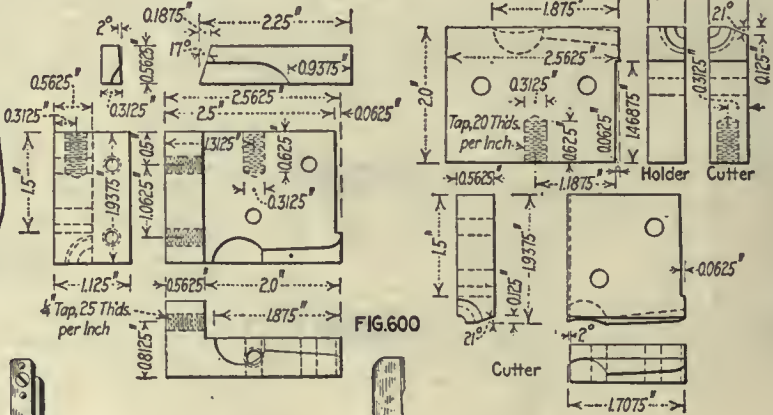

FIG.600

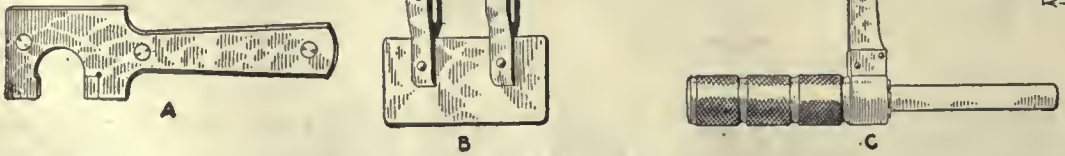

FIG.601

OPERATION 7

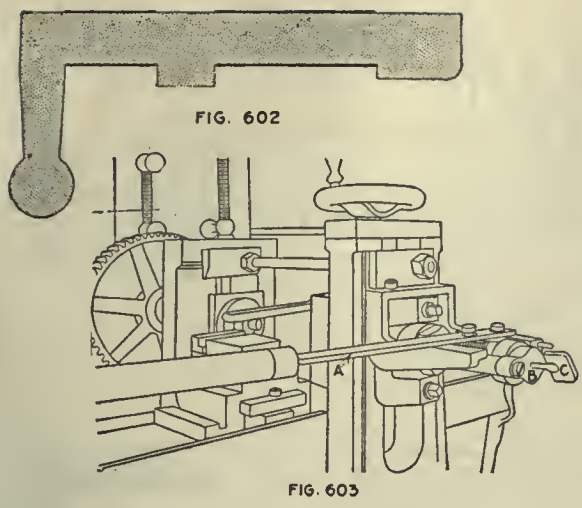

FIG. 602

FIG. 603

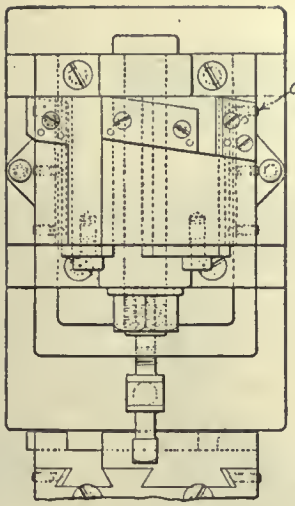

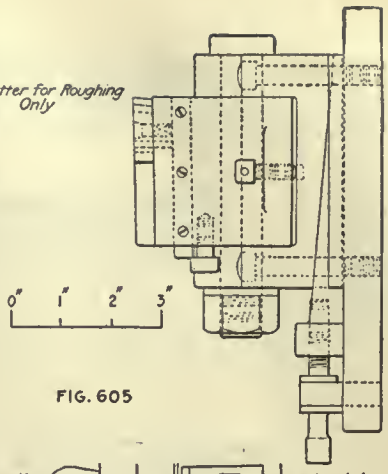

FIG. 605

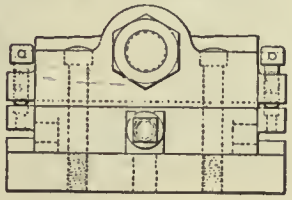

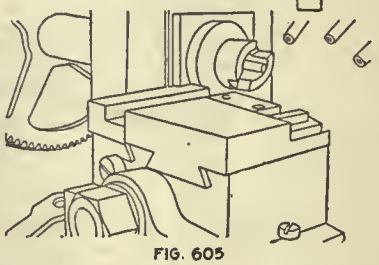

FIG. 605

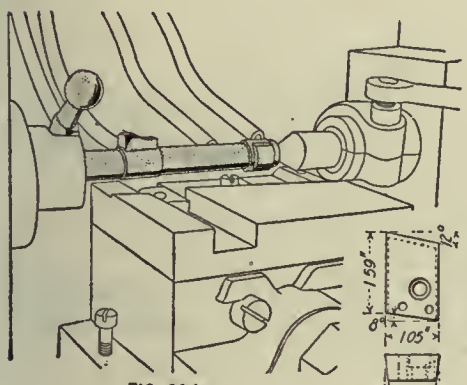

FIG. 604

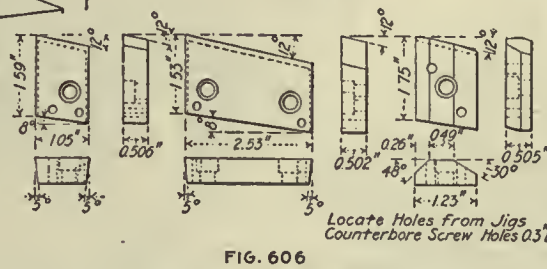

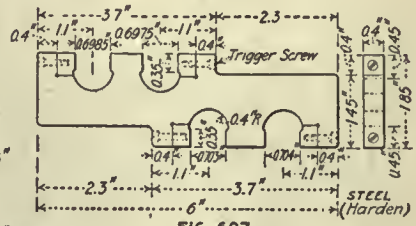

FIG. 607

FIG. 606
OPERATION 8

OPERATION AA. REAMING STRIKER POINT HOLE TO FINISH (HAND)

Number of Operators—One. Description of Operation—Reaming striker point hole to finish, by hand. Apparatus and Equipment Used—Hand reamer. Production—350 per hr. Note—Striker body is 0.28-in. diameter and striker point is 0.075-in. diameter.

OPERATION 5. COUNTERSINKING FRONT END IN LATHE

Transformation—Fig. 590. Machine Used—Prentice speed lathe. Number of Operators per Machine—One. Cutting Tools—Countersink, Fig. 591. Coolant—Cutting oil applied with brush. Gages—None. Production—175 per hr. Note—Same as operation 6, except tool used.

OPERATION 6. FACING REAR END IN LATHE

Transformation—Fig. 592. Machine Used—Prentice speed lathe, 14-in., Fig. 593. Number of Operators per Machine—One. Work-Holding Devices—Held on pilot and center in tailstock, Fig. 593. Tool-Holding Devices—Taper shank. Cutting Tools—End mill, Fig. 594. Cut Data—Speed, 70 r.p.m.; hand feed. Coolant—Cutting oil, ⅛-in. stream. Average Life of Tool Between Grindings—200 pieces. Gages—Fig. 595. Production—100 per hr.

OPERATION 7. CLAMP MILLING HANDLE

Transformation—Fig. 596. Machine Used—Machine built at the Hill shop. Number of Operators per Machine—One. Work-Holding Devices—Clamped to driver, Fig. 598, which screws on spindle nose. Tool-Holding Devices—Special holder, Fig. 599. Cutting Tools—Form cutters, Fig. 600. Number of Cuts—One. Cut Data—Speed, 70 r.p.m.; hand feed. Coolant—Cutting oil, ¼-in. stream. Average Life of Tool Between Grindings—50 pieces. Gages—Fig. 601; A, diameter of bail; B, double snap gage for taper handle; C, squaring handle with body. Production—45 per hr.

OPERATION 8. TURNING BODY, ROUGHING

Transformation—Fig. 602. Machine Used—Pratt & Whitney No. 2 Lincoln miller, Fig. 603; the dead center is controlled by lever A and held in place by strap B, which is swung in and out of place easily; the center is tightened by screw C. Number of Machines per Operator—Two. Work-Holding Devices—Held on centers, Fig. 604, driven by handle. Tool-Holding Devices—In holder on carriage of machine, Fig. 605. Cutting Tools—Form cutter, Fig. 606. Number of Cuts—One. Cut Data—Speed, 60 r.p.m.; ⅝-in. feed. Coolant—Cutting oil, ⅛-in. stream. Average Life of Tool Between Grindings—200 pieces. Gages—Fig. 607. Production—25 per hr.

OPERATION 10. TURNING LUGS, FRONT AND REAR, AND FRONT OF HANDLE

Transformation—Fig. 608. Machine Used—Pratt & Whitney No. 2 Lincoln miller. Number of Machines per Operator—One. Work-Holding Devices—Held on centers, Fig. 609. Tool-Holding Devices—Holder on carriage of machine, Fig. 610. Cutting Tools—Facing cutters, Fig. 611. Number of Cuts—One. Cut Data—Speed, 70 r.p.m.; ⅝-in. feed. Coolant—Compound, flooded with five ¼-in. streams. Average Life of Tool Between Grindings—200 pieces. Gages—Fig. 612; A, rear of front lugs from rear end; B, rear of rear lug from rear end; C, front of rear lug from rear end; D, front of handle from rear end; E, squaring lugs. Production—25 per hr.

other purposes. When this can be done as effectively as is done in this case, it reduces the number of idle machines in the plant, thus actually increases the per square foot floor-space operating efficiency of the plant as a whole.

The drilling and shaping of the striker seat is an interesting job, partly on account of the difficulty of supporting the tools which must have considerable overhang in order to reach the portion of the work which is to be machined. The use of a pilot on the spotting drill shown in Fig. 586A tends to reduce this overhang materially and insures at least that the center is spotted in correct relation to the bore of the bolt. The same principle of piloting the tool by the bolt bore is followed with the pinhole drill and the reamer shown in the same illustration. It will be noticed that chip clearance is provided by means of grooves on the sides of the pilots on these tools.

Operation 10 is a good example of how the miller can be induced to turn out lathe work to advantage. The miller characteristic of a rotating tool is dispensed with, and the cutting tools are held in the block shown in Fig. 610, this being mounted upon the miller table and advanced with its multiple tools into the rotating work. This arrangement gives a powerful drive combined with great rigidity, turning out 25 pieces per hour.

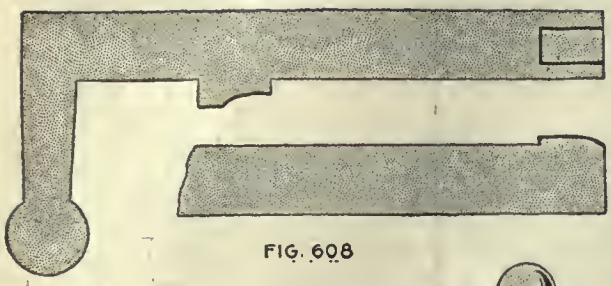

FIG. 608

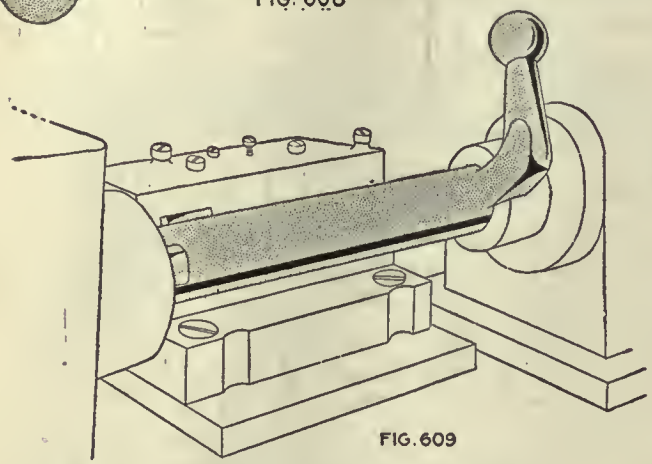

FIG. 609

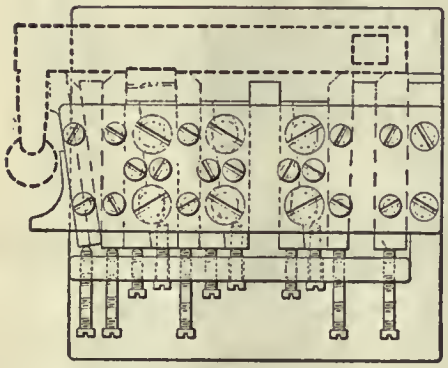

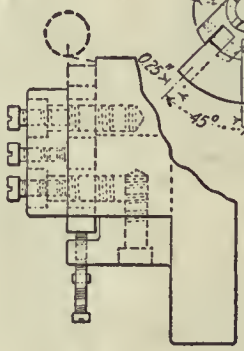

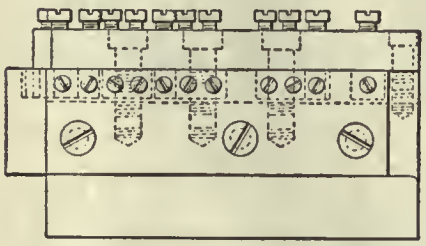

FIG. 610

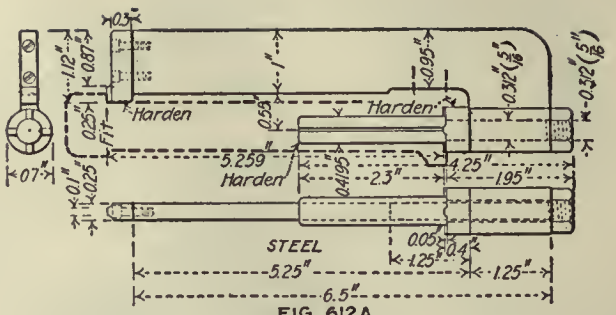

FIG. 612A

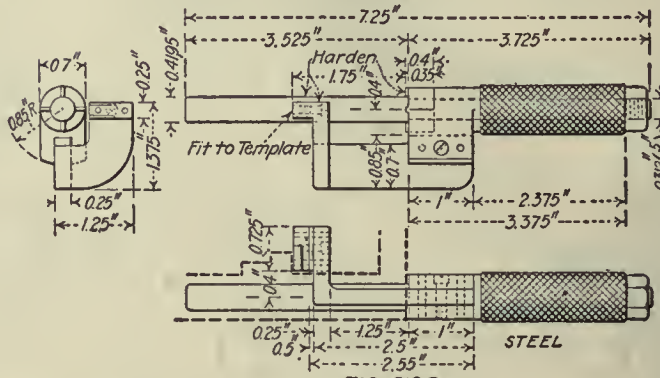

FIG. 612B

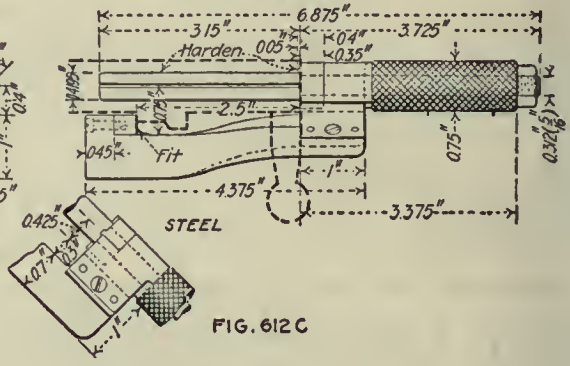

FIG. 612C

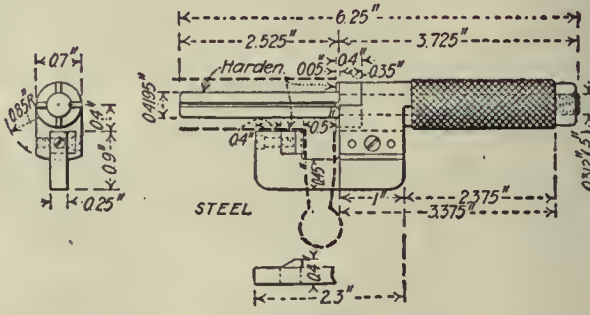

FIG. 612D

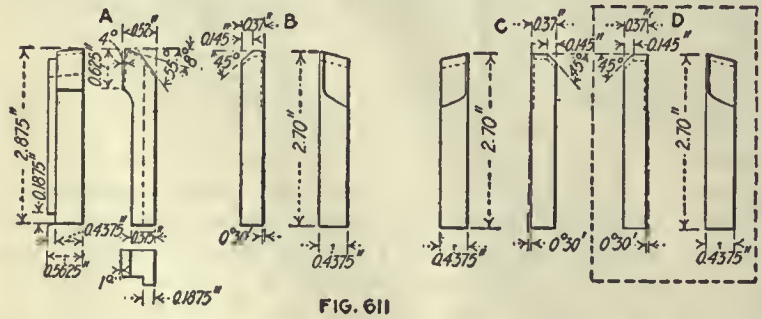

FIG. 611

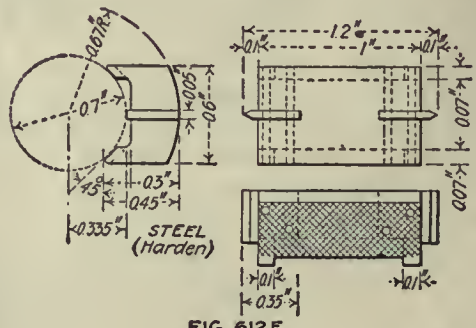

FIG. 612E

OPERATION 10

Operations on the Bolt—(*Continued*)

The turning of the body on Lincoln millers shows an interesting adaptation of that very useful machine, the roughing and finishing cutters being shown in detail in Figs. 610 and 616, and careful study of the work will be amply repaid.

OPERATIONS 16 AND 19½. TURNING BEVEL, FRONT END

Transformation—Fig. 613. Machine Used—Pratt & Whitney No. 2 Lincoln type miller, same as turning body, Fig. 603. Number of Operators per Machine—One. Work-Holding Devices—On centers, Fig. 614. Tool-Holding Devices—In holder on carriage of machine. Cutting Tools—Plain turning tools, similar to Fig. 606. Number of Cuts—One. Cut Data—70 r.p.m.; ⅝-in. feed. Coolant—Cutting oil, ¼-in. stream. Average Life of Tool Between Grindings—3,500 pieces. Gages—Fig. 615; A, diameter of extractor collar; B, distance; C, location of bevel from end; the arm is hinged and brought down on the bolt after it is slipped on the stud. Production—25 per hr.

OPERATION 9. TURNING BODY TO FINISH

Transformation—Same as Fig. 602. Machine Used—Pratt & Whitney No. 2 Lincoln miller, same as Fig. 603. Number of Machines per Operator—Two. Work-Holding Devices—Held on centers, same as Fig. 604. Tool-Holding Devices—Held in holder on carriage of machine. Cutting Tools—Form cutter, Fig. 616. Number of Cuts—One. Cut Data—Speed, 70 r.p.m.; ⅝-in. feed. Coolant—Cutting oil, five ⅛-in. streams. Average Life of Tool Between Grindings—250 pieces. Gages—See Fig. 607. Production—20 per hr. per machine.

OPERATION 11. BURRING REAR END OF WELL HOLE

Number of Operators—One. Description of Operation—Filing burrs thrown up by turning operation. Apparatus and Equipment Used—File. Production—400 per hr.

OPERATION 12. MILLING BODY, UNDER SIDE AND TOP OF HANDLE AND EXTRACTING CAM COLLAR

Transformation—Fig. 617. Machine Used—Pratt & Whitney No. 2 Lincoln miller. Number of Machines per Operator—One. Work-Holding Devices—Held on forms by finger A and clamped at ends by cams B, Fig. 618; one bolt is held in each position, so opposite sides of two bolts are milled at one setting. Tool-Holding Devices—Standard arbor. Cutting Tools—Formed milling cutters, Fig. 619. Number of Cuts—One. Cut Data—Speed, 50 r.p.m.; ⅝-in. feed. Coolant—Cutting oil, two ⅛-in. streams. Average Life of Tool Between Grindings—2,000 pieces. Gages—Fig. 620; A, under side and top of handle; B, diameter of collar; C, radius of corner top of handle; D, thickness of handle. Production—25 per hr. Note—Under side of handle becomes the working point in future operations.

*Copyright, 1916, Hill Publishing Co.

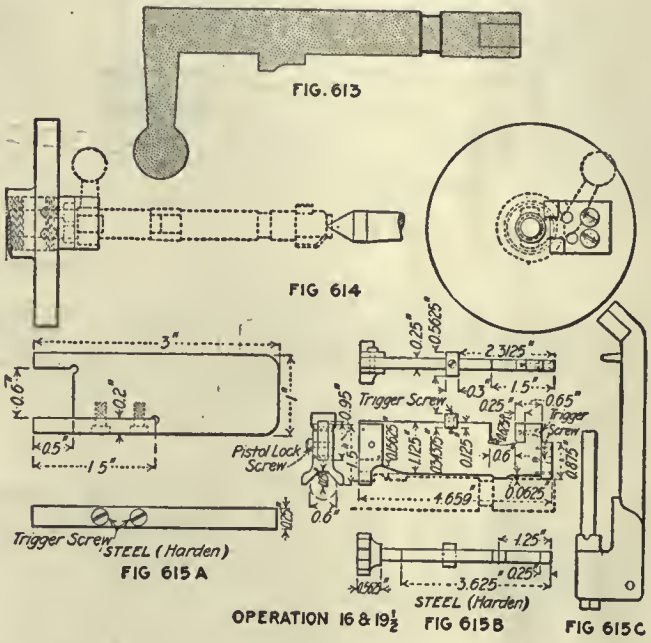

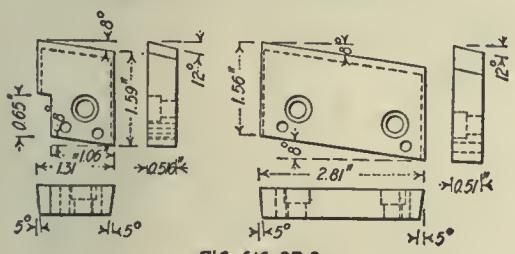

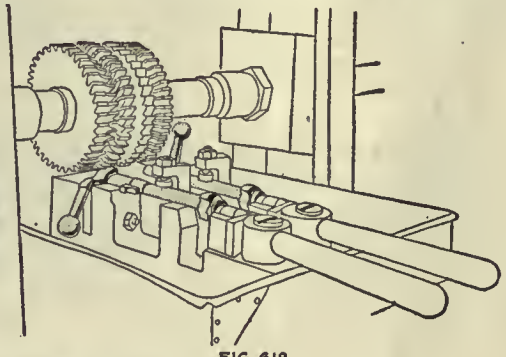

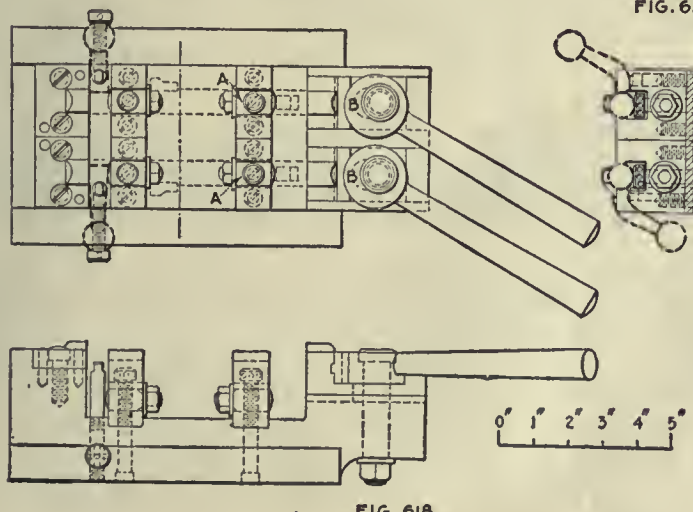

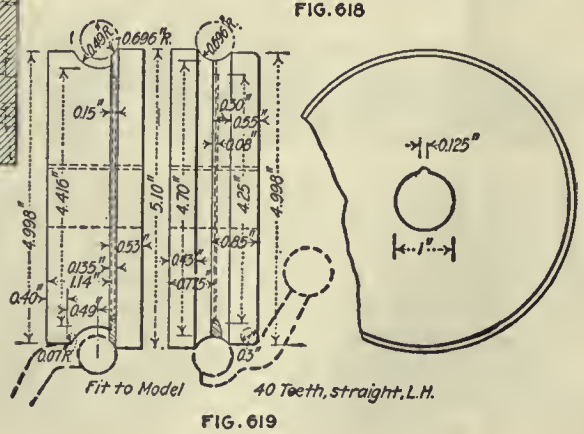

The bolt of the Springfield rifle, in common with that of almost all other military rifles in use today, performs many and varied functions. All designers seem to have centered on this type of action as against the rolling breech block and other mechanism for getting the cartridge in and out of the firing chamber of the barrel.

The withdrawal of the bolt extracts the cartridge case from the chamber and carries it back until it is forced out by the ejector in the side of the receiver. The new cartridge is either put into the receiver by hand or fed up from the magazine below, depending on the position of the cutoff. The forward motion of the bolt pushes the cartridge into the chamber of the barrel and, when it is turned down, locks the forward lugs against the corresponding shoulder of the receiver, so that both the bolt and the receiver must withstand the shock or impact of the explosion of the cartridge in discharging its bullet. When it is considered that the powder pressure in the chamber of the rifle is about 51,000 lb. per sq.in., we can see the necessity for using steel of high grade and for accurate machining of parts that withstand this shock.

The machining operations are, for the most part, performed in pairs, as will be seen. In such cases it will usually be found that operations are combined by having the top of one bolt milled in one part of the fixture and the bottom of another bolt milled in the other pair of jaws. This practically finishes the bolt, so far as the lugs are concerned, if that happens to be the operation being performed.

It will be noticed that the plain cam is usually employed for locking the work in the fixture. This is sometimes modified by combining the cam with a sliding finger, when this enables the work to be handled more quickly in and out of the jig. Other forms of swinging clamps are also employed, notably in operation 36, Figs. 670

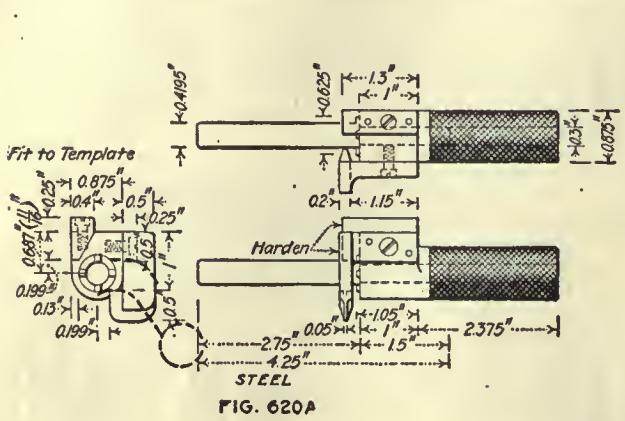

FIG. 620A

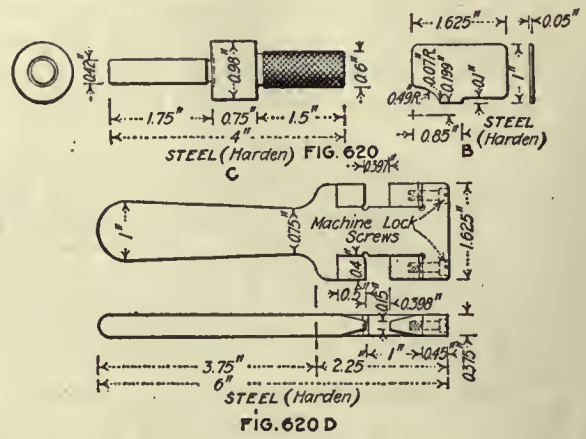

FIG. 620 B C D

OPERATION 12

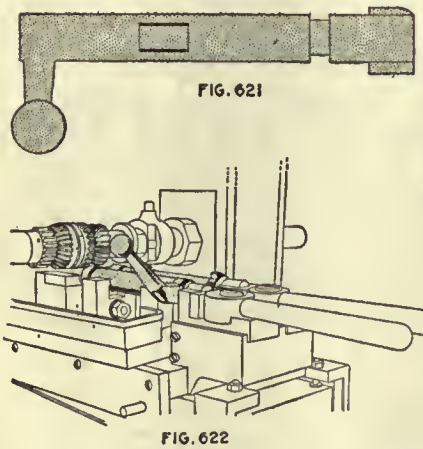
FIG. 621

FIG. 622

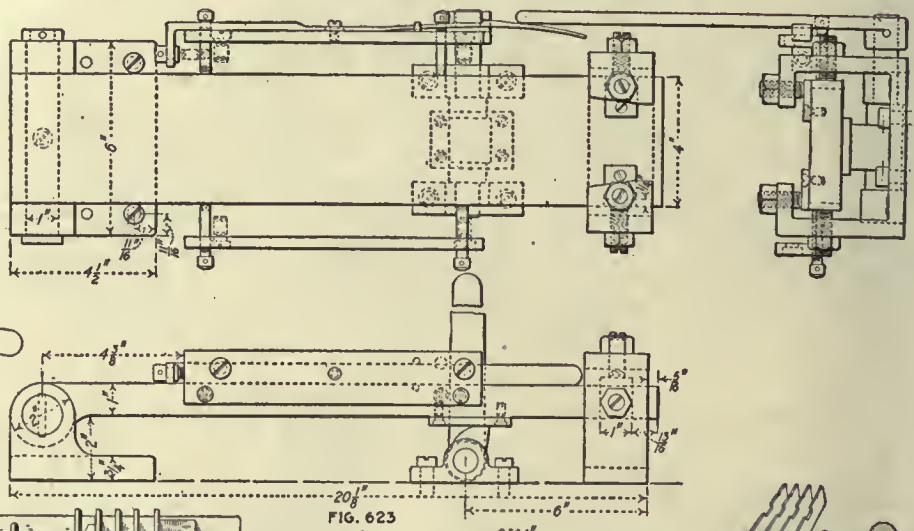
FIG. 623

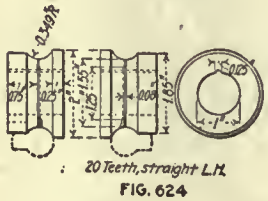

FIG. 624

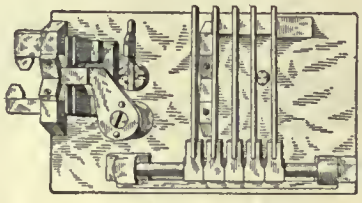
FIG. 625

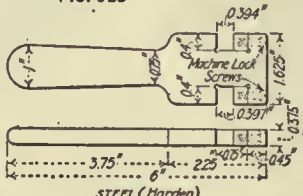

FIG. 625A

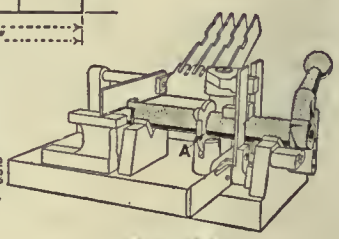
FIG. 625B

OPERATION 13

OPERATION 13. MILLING RIGHT AND LEFT SIDE OF SAFETY LUG

Transformation—Fig. 621. Machine Used—Pratt & Whitney No. 2 Lincoln miller. Number of Machines per Operator—One. Work-Holding Devices—On forms clamped on ends, Figs. 622 and 623. Tool-Holding Devices—Standard arbor. Cutting Tools—Milling cutter, Fig. 624. Number of Cuts—One. Cut Data—Speed, 60 r.p.m.; ⅝-in. feed. Coolant—Cutting oil, two ¼-in. streams. Average Life of Tool Between Grindings—2,000 pieces. Gages—Fig. 625; A, width; B, finger gage for contour; a clamp holds bolt while the various fingers measure the different parts of the bolt. Production—25 per hr.

and 671. Here the clamping piece *A* can be swung clear of everything by means of the long link on which it is hung, while the actual locking is accomplished by the cam surface on the inside of the hook.

The odd shape of the bolt, with the handle at right angles to the center line of the body, in addition to the bend in the handle itself, makes it a somewhat difficult piece to hold for some of the operations. These difficulties are, however, overcome in various ways, as can be observed.

Some of the operations are seemingly very trivial from the machining point of view, and yet each must be done in the proper place and to the proper size to match in with some of the many functions that the bolt must perform. The small cam cuts in the end of the bolt, both for the cocking piece and for the sleeve lock, are good examples of operations of this kind.

The type of rotating fixture that is largely employed in this work is shown in Fig. 636, this particular operation being the hand milling of the front end of the bottom lug and the top of the locking lug. This illustration shows clearly how the bolt is held in the fixture with the front end projecting so as to be accessible to the cutter, while at the same time it is substantially supported against the thrust of the cutter, so as to prevent vibration with its attendant chatter. The methods of rotating on the trunnions *CC* by means of the handle *D* can be clearly seen, the amount of movement being governed by adjustable stops, one of which is shown in front of the lever.

The milling of what may be called the back or neutral part of the lugs to conform with the body of the bolt itself involves the use of hand millers and formed milling cutters to secure the proper contour. Even then it is not always easy to have the cuts blend into the curve of the turned body, as a slight eccentricity or a slight misadjustment sidewise will affect the proper joining of the curves.

And with all these irregular shapes there is the constant gaging so that all parts may have not only the correct size and shape, but the proper relation to the other parts, the under side of the handle and the back end being the two important gaging points.

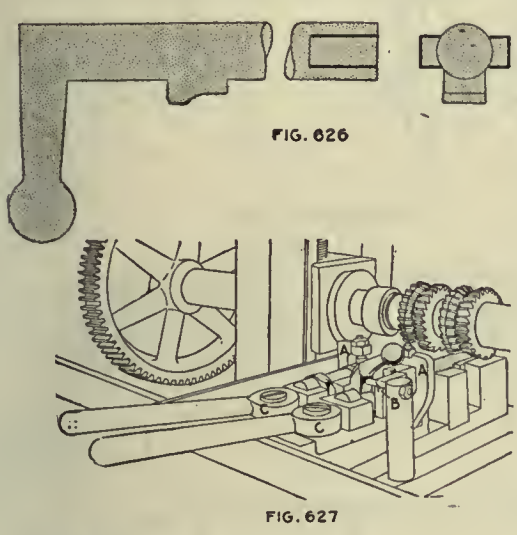
FIG. 626

FIG. 627

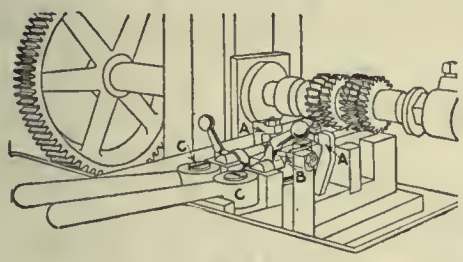
FIG 628

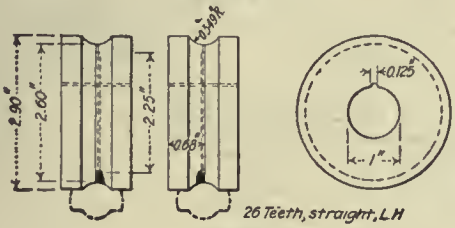

FIG. 630

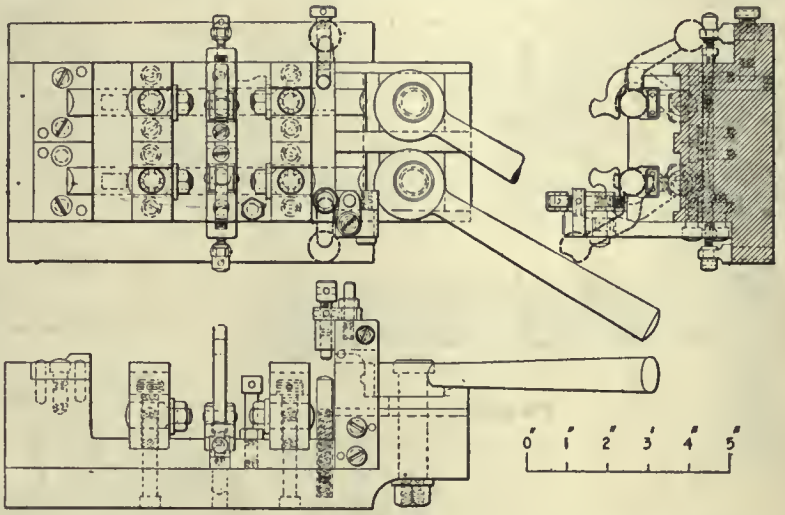
FIG. 629

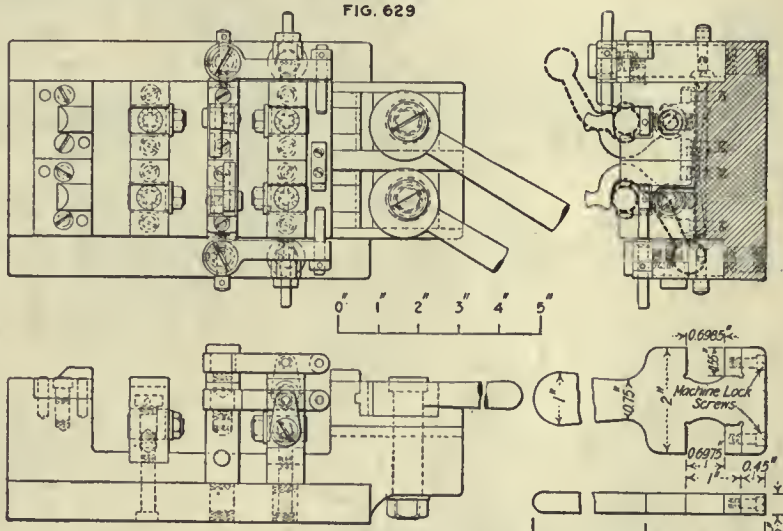

FIG. 629A

FIG. 631

OPERATION 14

OPERATION 14. MILLING RIGHT AND LEFT SIDE OF LOCKING LUGS

Transformation—Fig. 626. Machine Used—Pratt & Whitney No. 2 Lincoln miller. Number of Machines per Operator—One. Work-Holding Devices—Vise with side and end clamps, Figs. 627 and 628, details in Fig. 629; fingers A hold swing over work, which stops against B; cams C hold at ends. Tool-Holding Devices—Standard arbor. Cutting Tools—Two sets radius cutters, Fig. 630. Cut Data—Speed, 60 r.p.m.; 5/8-in. feed. Coolant—Cutting oil, two 1/4-in. streams. Average Life of Tool Between Grindings—2,000 pieces. Gages—Fig. 631, diameter of body; see also Fig. 625. Production—25 per hr.

In this connection the use of what may be called finger gages can be clearly seen. One type of these is shown in Fig. 615-C. Here the stud slips inside the firing-pin rod hole to the shoulder at the back, the finger being held out of the way until the gage is in place. Then the finger is lowered onto the work and gages both the bevel of the front end and its distance from the shoulder at the rear.

OPERATION 19. HAND MILLING TO REMOVE STOCK LEFT BY OPERATIONS 12 AND 13

Transformation—Fig. 632. Machine Used—Garvin No. 3 hand miller. Number of Operators per Machine—One. Work-Holding Devices—Vise; jaws clamped on end, Fig. 633. Tool-Holding Devices—Taper shank. Cutting Tools—Radius milling cutter, Fig. 634. Number of Cuts—One. Cut Data—Speed, 300 r.p.m.; hand feed. Coolant—Cutting oil, $\frac{1}{16}$-in. stream. Average Life of Tool Between Grindings—2,000 pieces. Production—70 per hr.

OPERATIONS 15 AND 24. HAND MILLING FRONT END OF BOTTOM LUG AND TOP OF LOCKING LUGS

Transformation—Fig. 635. Machine Used—Garvin No. 3 hand miller. Number of Operators per Machine—One. Work-Holding Devices—Rotating fixture, Fig. 636; work held by finger A; plate B is rotated on trunnion CC by handle D. Tool-Holding Devices—Taper shank. Cutting Tools—Milling cutters, Fig. 637. Number of Cuts—One. Cut Data—Speed, 85 r.p.m.; hand feed. Coolant—Cutting oil, $\frac{1}{16}$-in. stream. Average Life of Tool Between Grindings—2,000 pieces. Gages—Fig. 638; A, front end of bottom lug, radius and distance; B, height of safety lug. Production—75 per hr.

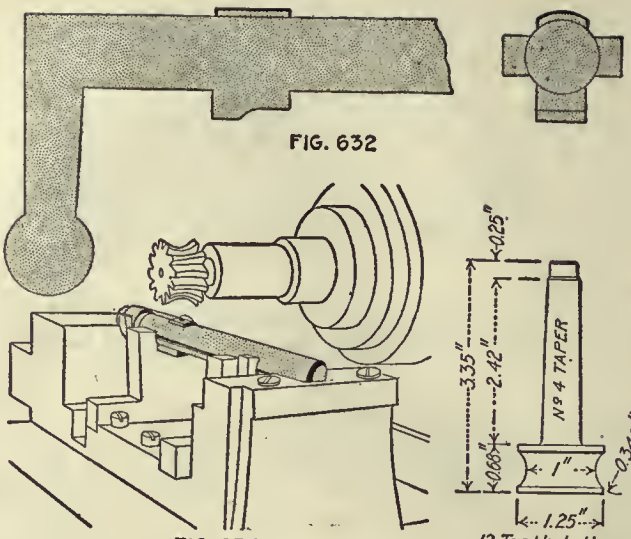

OPERATION 19

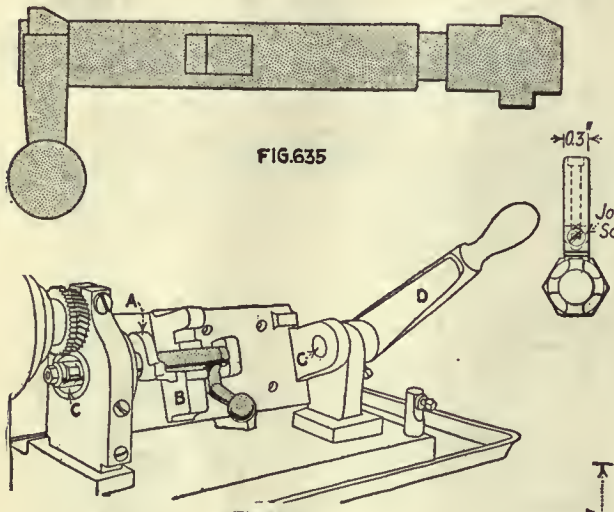

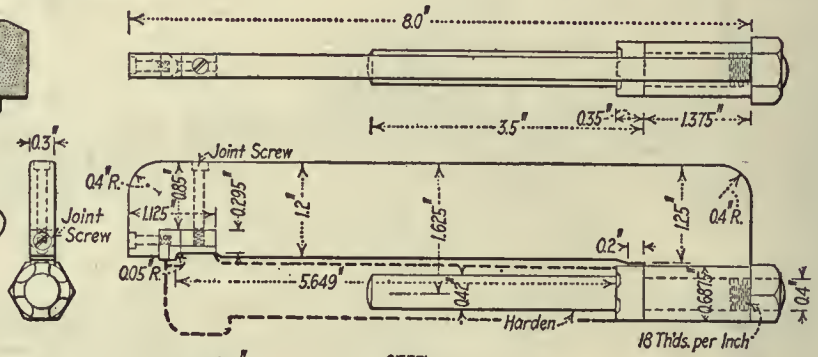

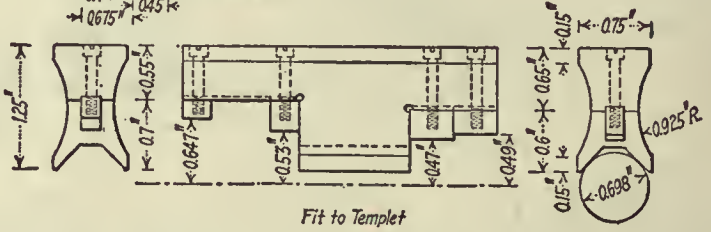

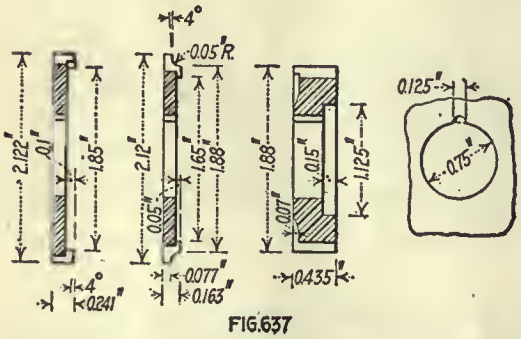

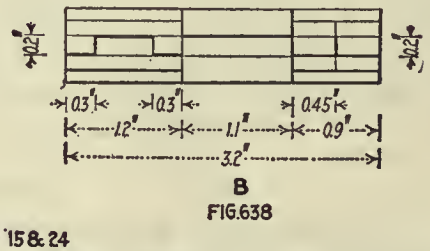

OPERATION 15 & 24

Another type of finger gage is shown in Fig. 625. This might perhaps be called the cross-finger type, from the location of the finger and the way in which it is used. The fingers, as can be seen in Fig. 625-B, serve to gage the shape of the lugs and of the body at various points.

The bolt is located in V's with relation to the under side of the handle, and the various fingers are dropped into place as required. Suitable stops are placed to hold them in proper position. If they touch the stops before making contact with the work, the bolt is too small at that point, and vice versa. It will also be noticed that there are a pair of vertical fingers near the handle. These stop against a suitable projection so as to gage the sides of the safety lug at the same time the horizontal fingers are gaging the other portion.

It will be noted that the V gage, or gages with V openings for centering the work, are used to a considerable extent, one instance being shown in Fig. 638. This gages the radius of the bottom lug or its height from the body and presupposes the body being the correct diameter. Other gages for a somewhat similar purpose use the center hole as the guiding point.

Few pointer or indicating gages are used, although one is shown in Fig. 657. The tendency is toward positive

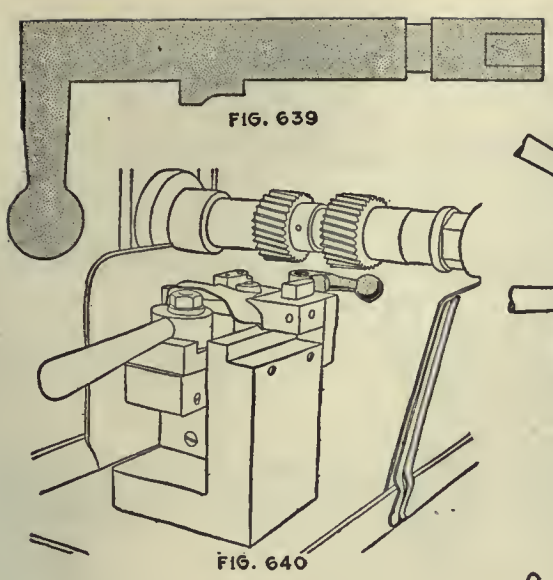

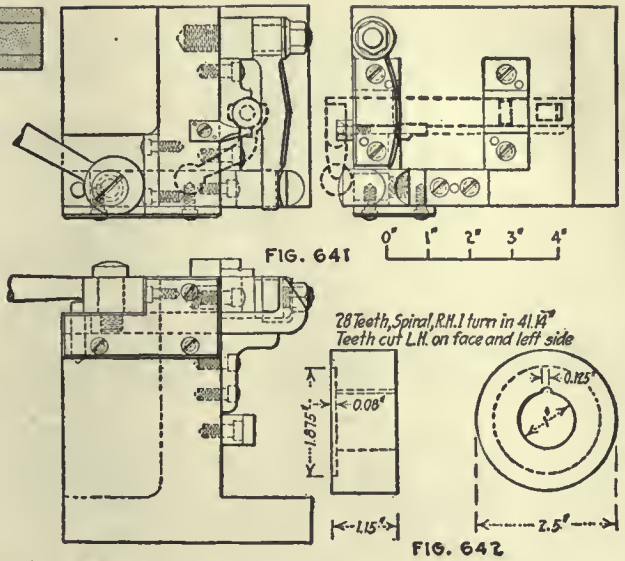

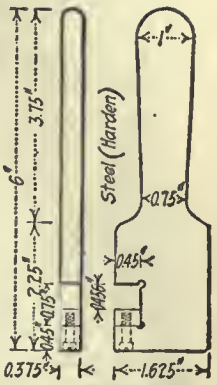

Operation 20

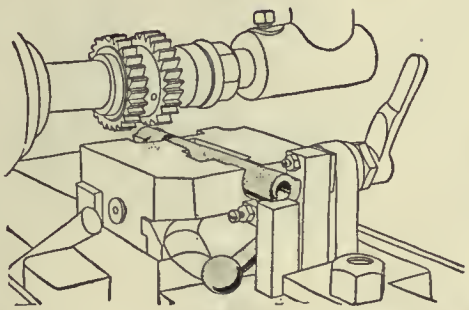

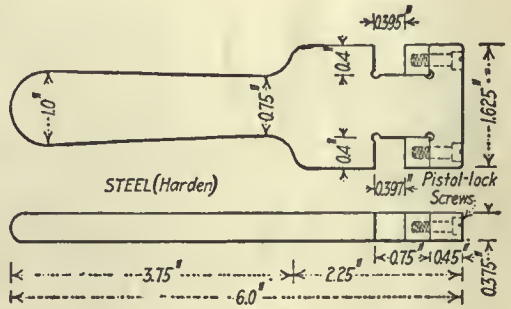

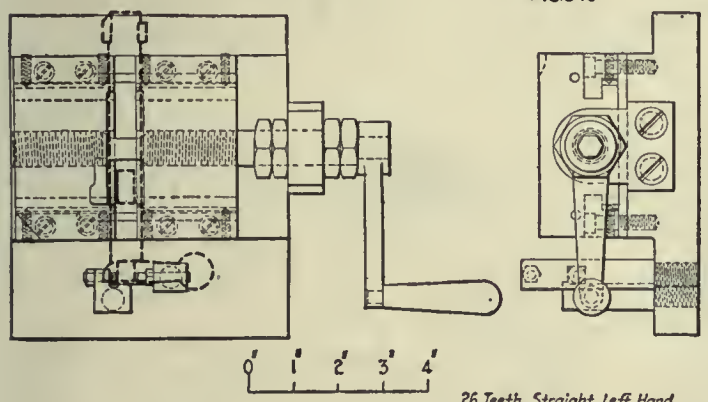

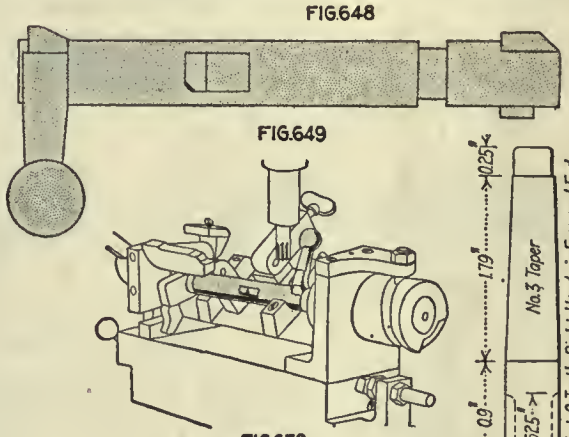

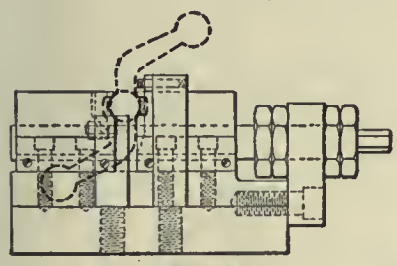

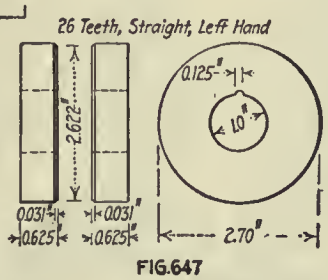

OPERATION 48

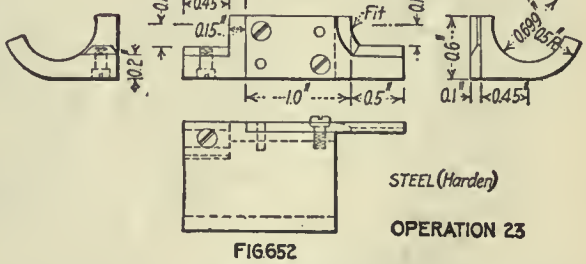

OPERATION 23

OPERATION 20. MILLING REAR OF HANDLE TO GAGE

Transformation—Fig. 639. Machine Used—Pratt & Whitney No. 2 Lincoln miller. Number of Machines per Operator—Two. Work-Holding Devices—Work clamped to block in upright position, Fig. 640; details in Fig. 641; double fixtures are also used. Tool-Holding Devices—Standard arbor. Cutting Tools—Two side-milling cutters, Fig. 642. Number of Cuts—One. Cut Data—Speed, 60 r.p.m.; ⅝-in. feed. Coolant—Cutting oil, put on by brush. Average Life of Tool Between Grindings—2,000 pieces. Gages—Fig. 643, thickness. Production—25 per hr.

OPERATION 48. HAND MILLING SIDES OF LOCKING LUGS

Transformation—Fig. 644. Machine Used—Garvin No. 3 hand miller. Number of Operators per Machine—One. Work-Holding Devices—Forms and vise jaws, Fig. 645; details in Fig. 646. Tool-Holding Devices—Standard arbor. Cutting Tools—Two milling cutters, Fig. 647. Number of Cuts—One. Cut Data—Speed, 300 r.p.m.; hand feed. Coolant—Cutting oil, put on by brush. Average Life of Tool Between Grindings—2,000 pieces. Gages—Fig. 648, thickness. Production—65 per hr.

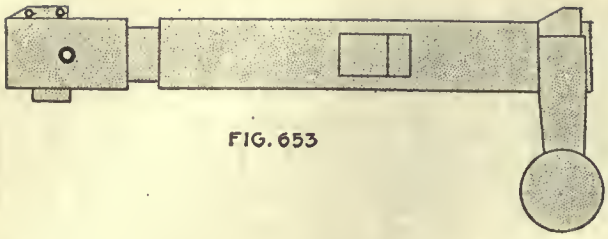

FIG. 653

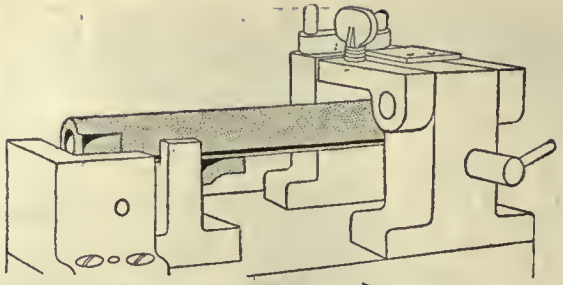

FIG. 654

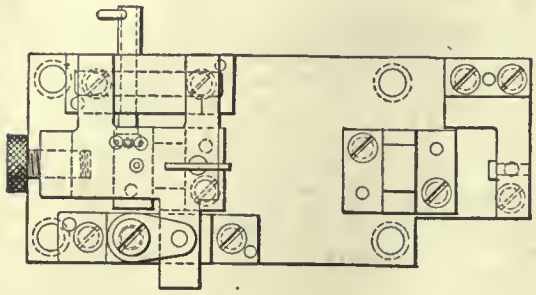

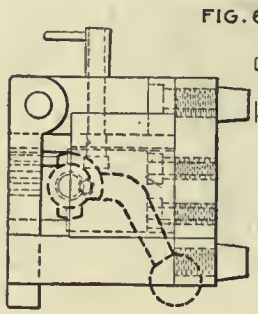

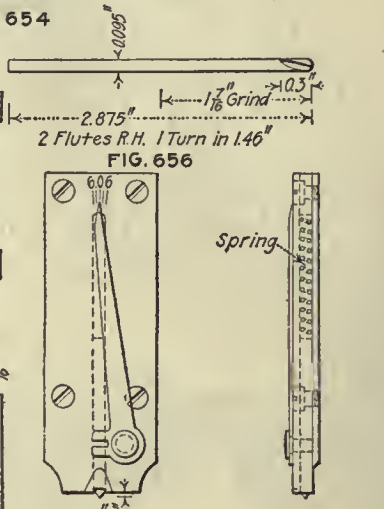

FIG. 656

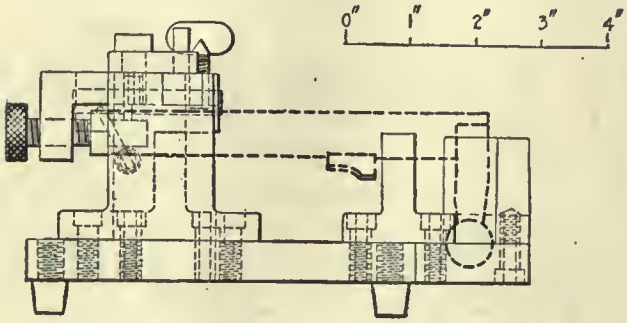

FIG. 655

OPERATION 32

Finger
STEEL (Harden)

FIG. 657

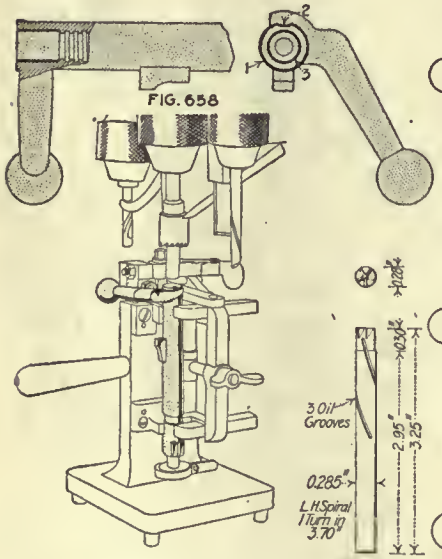

FIG. 658

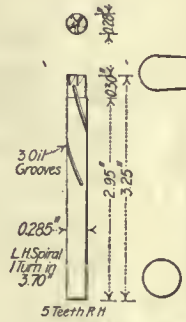

FIG. 662B

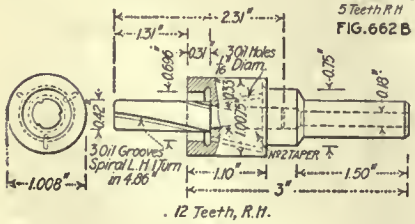

FIG. 662

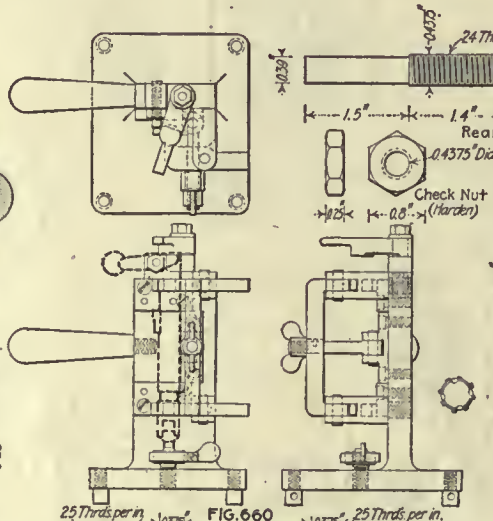

FIG. 660

FIG. 663A

FIG. 663B

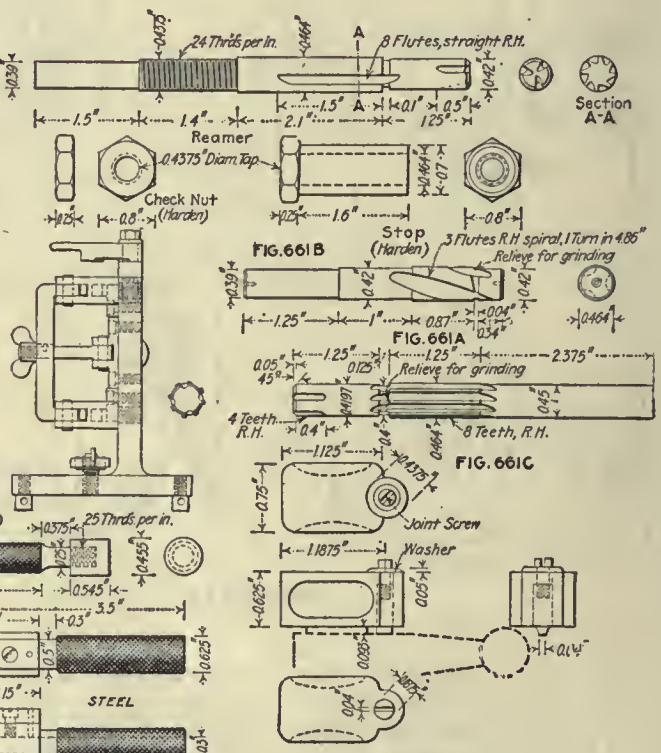

FIG. 663 B.

OPERATION 21.28.29

gages or those with direct readings instead of multiplication as with a pointer. "Feel" gages, depending on the sense of touch, do not seem to have found their way into the rifle field to any great extent.

As has been intimated before, the machines used are not always those which would have been selected as best suited for the work had it been a case of buying new machinery. But, as in the management of railway shops to a large extent, it often becomes necessary to utilize machines which were already in the shops, and this adaptation has been very skillfully done in nearly every instance.

The casehardening of the bolt requires special attention as it must not be too soft nor yet so hard as to be brittle. A hardness test, either by scleroscope or Brinell method, is required on 25 per cent. of each of lot receiving the same heat treatment. This care is necessary owing to the high pressure caused by the explosion, this

OPERATION BB. REMOVING BURRS FROM REAR LUGS AND UNDER HANDLE

Number of Operators—One. Description of Operation—Removing burrs thrown up around lugs and under handle. Apparatus and Equipment Used—File and scraper. Production—250 per hr.

OPERATION CC. STAMPING STOCK NUMBER

Number of Operators—One. Description of Operation—Stamping stock number on under side of safety lug. Apparatus and Equipment Used—Stamp and hammer. Production—450 per hr.

OPERATIONS 21, 28, 29. HOLLOW MILLING AND COUNTERBORING FOR SLEEVE, AND MILLING FOR SAFETY LOCK

Transformation—Fig. 658. Machine Used—Dwight-Slate 14-in. three-spindle upright drilling machine. Number of Operators per Machine—One. Work-Holding Devices—Vertical fixture, Fig. 659; for details see Fig. 660, which holds bolt for all three operations. Tool-Holding Devices—Drill chuck. Cutting Tools—Counterbore, Fig. 661; A, B and C, counterbores; hollow mill, Fig. 662, A and B mills for safety lock. Cut Data—Speed of hollow mills, 260 r.p.m.; of other tools, 540 r.p.m.; hand feed. Coolant—Cutting oil, $\frac{1}{16}$-in. stream.

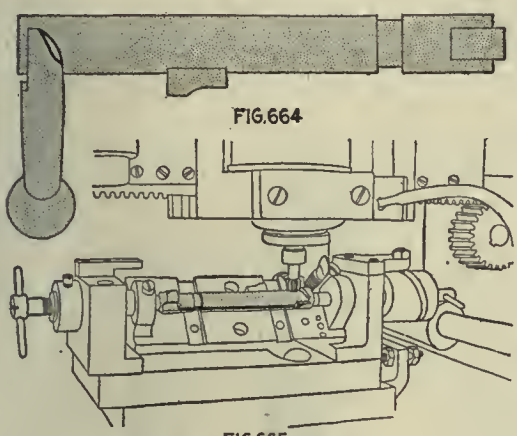

FIG.665

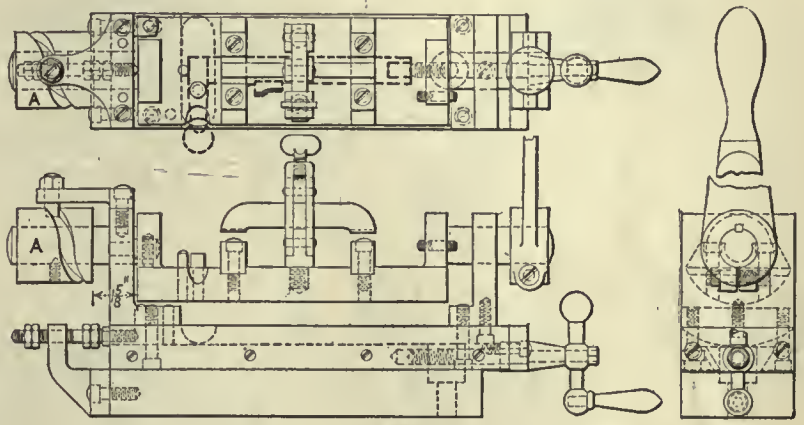

FIG.666

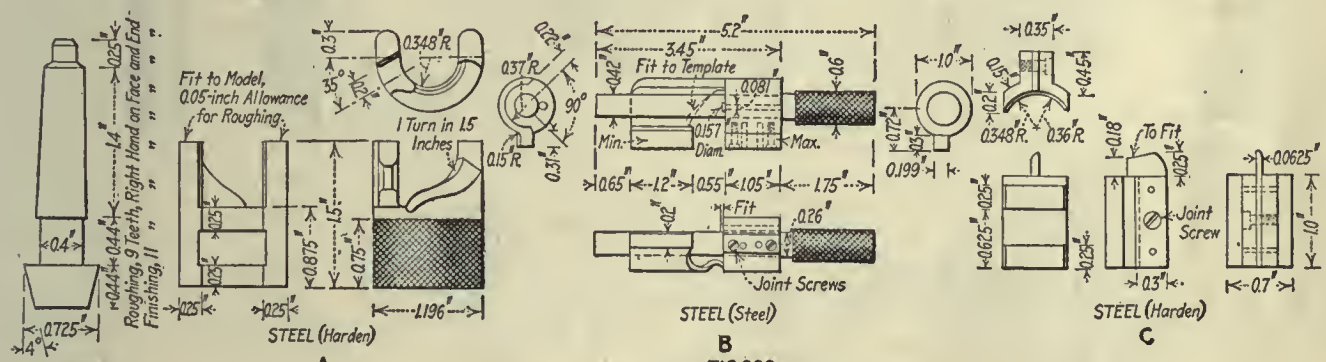

FIG.667 A

B

FIG.668 C

OPERATION 25 & 26

OPERATION 23. HAND MILLING REAR CORNER OF REAR LUG

Transformation—Fig. 649. Machine Used—Ames 16-in. upright drilling machine. Number of Operators per Machine—One. Work-Holding Devices—Rotating fixture, Fig. 650. Tool-Holding Devices—Taper shank. Cutting Tools—End mill, Fig. 651. Number of Cuts—One. Cut Data—Speed, 600 r.p.m.; hand feed. Coolant—Cutting oil, $\frac{1}{16}$-in. stream. Average Life of Tool Between Grindings—500 pieces. Gages—Fig. 652, angle of corner. Production—100 per hr.

OPERATION 32. DRILLING GAS AND BOLT-STOP PIN HOLES

Transformation—Fig. 653. Machine Used—Dwight-Slate 14-in. three-spindle upright drilling machine. Number of Operators per Machine—One. Work-Holding Devices—Drill jig, Fig. 654; details in Fig. 655. Tool-Holding Devices—Drill chuck. Cutting Tools—Two drills; one, Fig. 656, has a rounded point for bolt-stop pin holes. Cut Data—Speed, 1,500 r.p.m.; hand feed. Coolant—Cutting oil, put on with brush. Average Life of Tool Between Grindings—1,000 pieces. Gages—Fig. 657, depth of stop-pin holes. Production—75 per hr.

OPERATION DD. REMOVING BURRS FROM EXTRACTOR-COLLAR GROOVE

Number of Operators—One. Description of Operation—Removing burrs thrown up at extractor collar. Apparatus and Equipment Used—File and scraper. Production—300 per hr.

OPERATIONS 25 AND 26. PROFILING EXTRACTOR CAM, ROUGH AND FINISH

Transformation—Fig. 664. Machine Used—Pratt & Whitney No. 2 profiler, Fig. 665. Number of Operators per Machine—One. Work-Holding Devices—Rotating fixture, Fig. 666; cam at A gives proper profile. Tool-Holding Devices—Taper shank. Cutting Tools—Two angle cutters, roughing and finishing, Fig. 667. Number of Cuts—Two. Cut Data—Speed, 900 r.p.m.; hand feed. Coolant—Cutting oil, $\frac{1}{16}$-in. stream. Average Life of Tool Between Grindings—300 pieces. Gages—Fig. 668; A, contour of cam; B, location from shoulder and locking lug; C, angle of side of cam. Production—60 per hr.

OPERATION FF. REMOVING BURRS LEFT BY OPERATION 28, WITH FACING TOOL

Number of Operators—One. Description of Operation—Removing burrs left by operation 28. Apparatus and Equipment Used—Hand facing tool with pilot. Production—300 per hr.

OPERATION GG. REMOVING BURRS LEFT BY OPERATION 21, FILING

Number of Operators—One. Description of Operation—Removing burrs thrown up by operation 21. Apparatus and Equipment Used—File and scraper. Production—300 per hr.

being 51,000 lb. with the regular cartridge and 71,000 lb. with the high-pressure testing cartridge, or "blue pill," as it is commonly called. Full directions for the case-hardening treatment which has been found useful for the bolt will appear in the remaining article on the manufacture of the bolt.

The question of cutting lubricants or coolants in connection with the making of rifles has had careful study and has been the subject of much experiment. This has resulted in the establishment of a number of cutting mixtures to handle different grades of stock and different kinds of work, each being used where experience has shown it to be most suitable.

The coolants in use in the Springfield armory include lard oil, Triumph oil, cutting oil, Nagle oil, fish oil and soda. Then there is what is known as "black oil," which is the oil that has been used on machines and afterward filtered. This is of course a mixture of all the kinds of oils, the proportions of each being unknown. This black oil is used in making the soda or cutting compounds, although at times Triumph and even fish oil may be added to thicken it or give it a little more body.

The usual cutting compound is made from 3 gal. of black oil, 8 gal. water and 10 lb. of sal soda, enough being mixed in this proportion to fill the large tank from which it is pumped to the various parts of the shop. This compound is mixed up once a year, during the July vacation, and the scum is taken off as it rises from time to time. There are also small tanks on or near some machines, where a special mixture can be made, this generally consisting of the addition of more oil to give it body for handling tough stock.

A compound that is working out well for a particularly tough bolt stock is made from 1 gal. of Nagle oil and 4 gal. of water, this seeming to make a better job and be easier on the turning or shaving cutters. It proved to be better than oil in the case in question, which might have been an exceptional case.

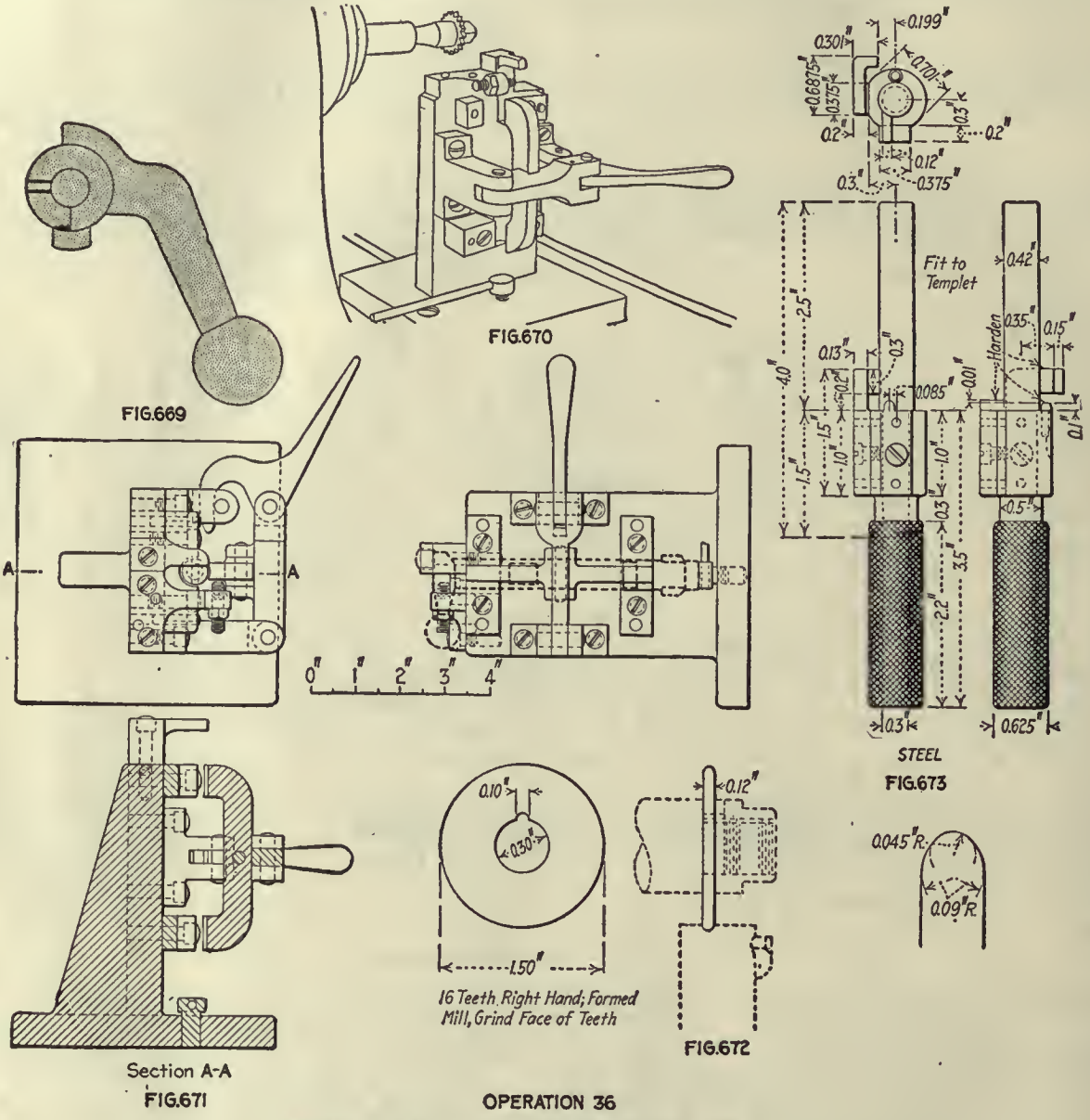

OPERATION 36. HAND MILLING FOR COCK-NOTCH

Transformation—Fig. 669. Machine Used—Garvin No. 3 hand miller, Fig. 670. Number of Operators per Machine—One. Work-Holding Devices—Clamped to fixture, Fig. 671. Tool-Holding Devices—Standard cutter arbor. Cutting Tools—Round-nose slotting cutter, Fig. 672. Number of Cuts—One. Cut Data—Speed, 450 r.p.m.; hand feed. Coolant—Cutting oil, put on with brush. Average Life of Tool Between Grindings—1,000 pieces. Gages—Fig. 673, location of notch from under side of handle. Production—175 per hr. Note—Work-holding points, top and body; guiding point, under side of tail.

Operations on the Bolt—(*Continued*)

As the bolt nears completion it begins to receive much the same kind of attention as the receiver, in the shape of fussy little milling cuts and similar operations to perform some special function or to make room for some small piece of the sleeve, which works in close connection with it, in fact, becoming a part of it so far as operation in handling the rifle is concerned.

The next few pages take up the smaller operations which are, however, of vital importance in the operation of the rifle mechanism. The sleeve-lock cavity, for example, is a small circular cut at the back end of the bolt, having an angle on the upper side for the bevel of the sleeve lock, thus serving to lock the sleeve to the bolt. The usual type of rotating fixture, Fig. 676, makes this a simple hand-milling operation.

In some ways the bolt of the Springfield army rifle very closely resembles the similar part of the well known military rifles of other countries. In fact, what is known as the bolt action is now common in all rifles of this type. Many of these small operations have a close counterpart in other work and for that reason the fixtures used, the method of holding the work and the ways of gaging have a direct bearing on other work than rifle parts by a little modification and adaptation. It is this possibility of using these methods in regular manufacturing that makes them valuable to the average shop.

There is far too little interchange of ideas between shops in different fields as can be seen by a careful comparative study of methods in shops engaged in different lines of work. The machine shop can learn from the rifle shop or the typewriter shop and both of these can learn from each other as well as from the machine tool builder. But it is of course necessary to adopt methods to your use, they seldom fit as you find them, ready made.

Another small operation is milling the extractor groove, as shown in operation 27. The method of doing this is clearly given in Fig. 684, the gage, Fig. 686-A, being also of interest. The body of the bolt lies in the V-grooves

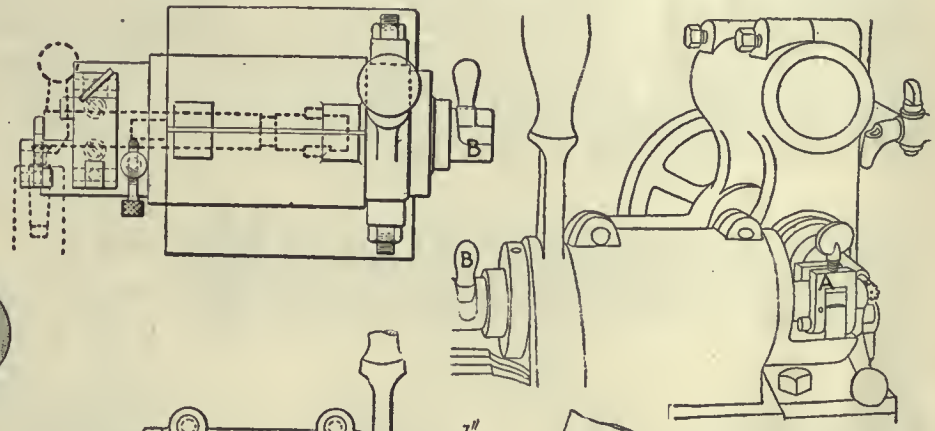

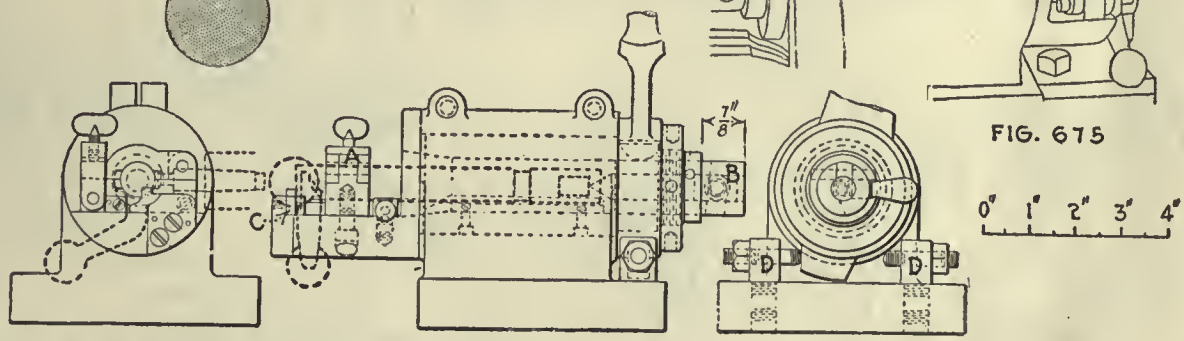

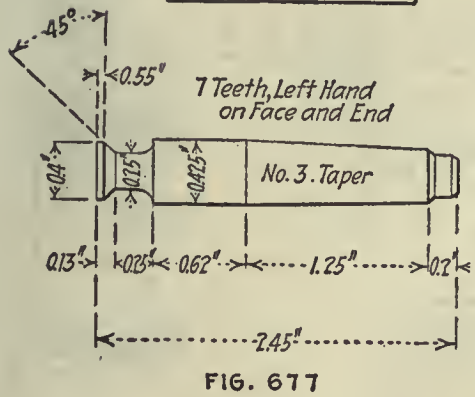

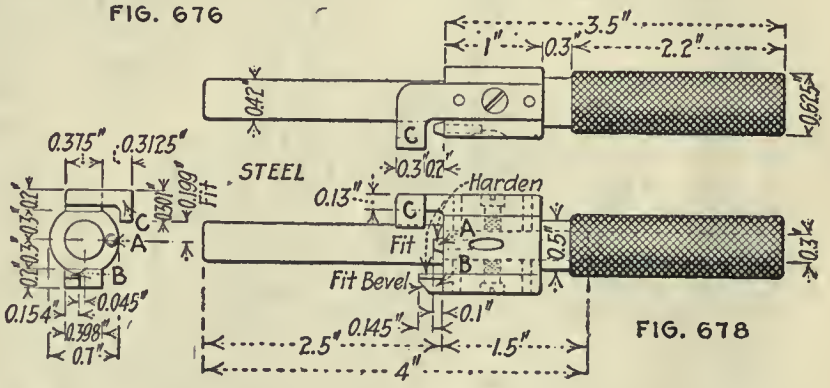

Operation 32½ and 33

OPERATIONS 32½ AND 33. HAND MILLING FOR SLEEVE LOCK

Transformation—Fig. 674. Machine Used—Whitney Manufacturing Co. hand miller, Fig. 675. Number of Operators per Machine—One. Work-Holding Devices—Rotating fixture, Fig. 676; bolt is clamped by A, while bayonet locking cam B forces it against hardened stop C; fixture is rotated between stops D. Tool-Holding Devices—Taper shank. Cutting Tools—Slotting cutter, Fig. 677. Number of Cuts—One. Cut Data—Speed, 600 r.p.m.; hand feed. Coolant—Cutting oil, ¼-in. stream. Average Life of Tool Between Grindings—1,500 pieces. Gages—Fig. 678; bevel for sleeve lock; pin A fits safety-lock groove and B measures bevel, while C fits bottom of handle Production—75 per hr. Note—Holding points, center hole and body

shown, while the pin at the end fits into the groove and measures depth as well as location.

The special tapping machine, seen in Fig. 696, was built in the armory. It carries three taps, so set and geared together as to divide the work up among them. Each tapping spindle is threaded with the proper lead to feed positively into the work and at the proper rate. Each tap must, however, be accurately set with reference to its lead, to secure good results. The method of holding the work is shown in Fig. 697, the lower side of the handle being the locating point. The bolt is held by a swinging clamp and screw.

One noticeable feature of most of the fixtures illustrated is the simple manner in which they accomplish their pur-

OPERATION 22. HAND MILLING TOP OF HANDLE

Transformation—Fig. 679. Machine Used—Whitney Manufacturing Co. hand miller. Number of Operators per Machine—One. Work-Holding Devices—Held on forms and clamped at end, Fig. 680; roller A guides cutter on form B to give proper contour. Tool-Holding Devices—Taper shank. Cutting Tools—Form cutter, Fig. 681. Number of Cuts—One. Cut Data—Speed, 180 r.p.m.; hand feed. Coolant—Cutting oil, ⅛-in. stream. Average Life of Tool Between Grindings—1,000 pieces. Gages—Fig. 682; A measures form along handle; B, form crosswise. Production—75 per hr. Note—Work-holding points, under side of handle, and ends.

OPERATION 27. HAND MILLING EXTRACTOR GROOVE

Transformation—Fig. 683. Machine Used—Whitney hand miller. Number of Operators per Machine—One. Work-Holding Devices—Rotating fixture, Fig. 684. Tool-Holding Devices—Taper shank. Cutting Tools—⅛-in. slotting cutter, Fig. 685. Number of Cuts—One. Cut Data—Speed, 1,200 r.p.m.; hand feed. Coolant—Cutting oil, ⅛-in. stream. Average Life of Tool Between Grindings—1,000 pieces. Gages—Fig. 686; A, depth of groove; B, width of slot and distance from end. Production—100 per hr. Note—Work-holding points, body and tail.

OPERATION 34. HAND MILLING SLEEVE STOP

Transformation—Fig. 687. Machine Used—Whitney Manufacturing Co. hand miller. Number of Operators per Machine—One. Work-Holding Devices—Held on forms clamped on top and at ends, Fig. 688. Tool-Holding Devices—Taper shank. Cutting Tools—End mill, Fig. 689. Number of Cuts—One. Cut Data—Speed, 900 r.p.m.; hand feed. Coolant—Cutting oil, ⅛-in. stream. Average Life of Tool Between Grindings—1,000 pieces. Gages—Fig. 690; pin A locates cut while finger B rests on under side of handle. Production—75 per hr. Note—Form screwed to side of fixture; follower on cutter arbor.

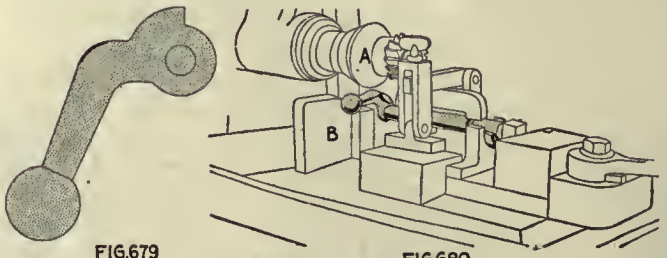

FIG.679 FIG.680

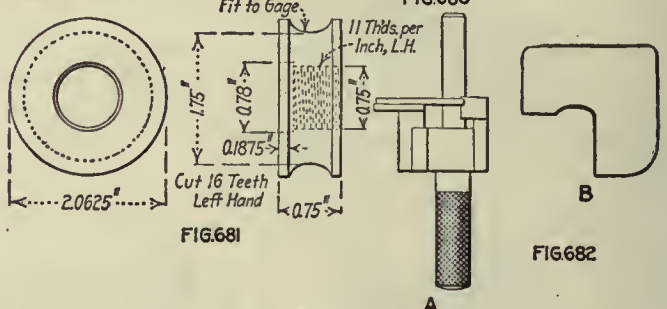

FIG.681 FIG.682

OPERATION 22

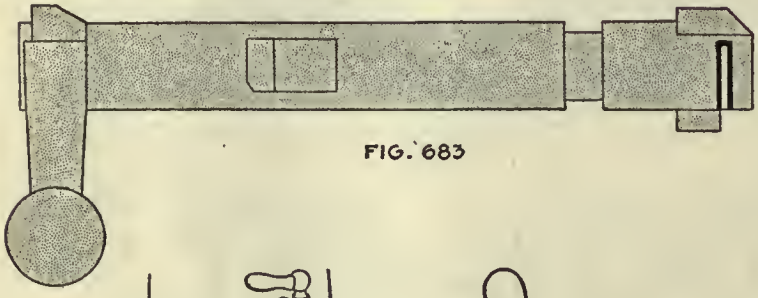
FIG. 683

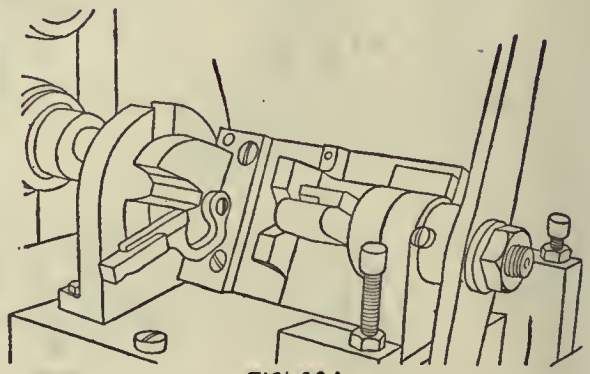
FIG. 684

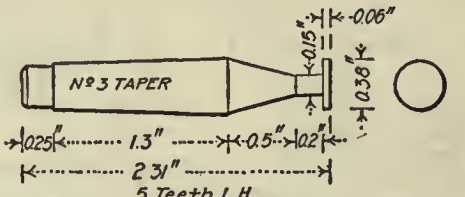

FIG. 685

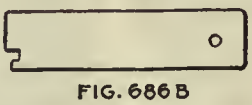
FIG. 686B

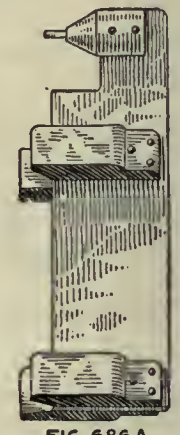
FIG.686A

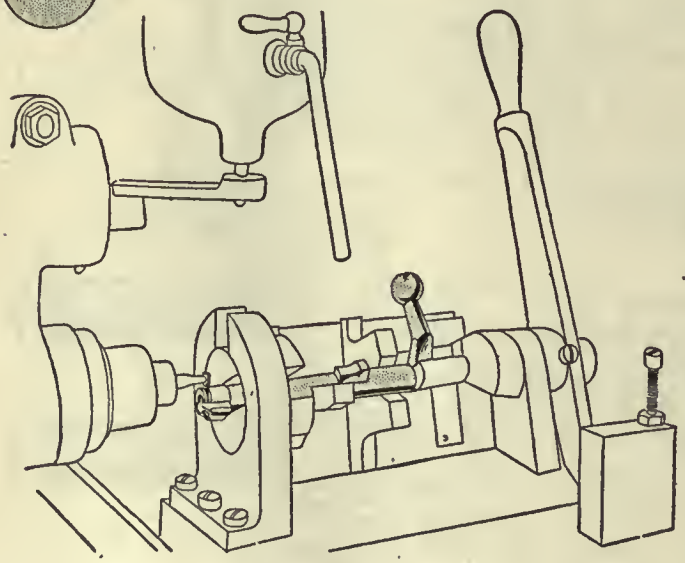
FIG. 684 OPERATION 27

OPERATION 35. HAND MILLING FOR SLEEVE LOCK

Transformation—Fig. 691. Machine Used—Whitney Manufacturing Co. hand miller. Number of Operators per Machine—One. Work-Holding Devices—Held in forms, clamped at end, Fig. 692. Tool-Holding Devices—Drill chuck. Cutting Tools—End mill, Fig. 693. Number of Cuts—One. Cut Data—Speed, 1,200 r.p.m.; hand feed. Coolant—Cutting oil, ⅛-in. stream. Average Life of Tool Between Grindings—1,000 pieces. Gages—Fig. 694, location from under side of handle. Production—100 per hr. Note—Working point, body and tail.

OPERATION 31. TAPPING FOR SLEEVE

Transformation—Fig. 695. Machine Used—Pratt & Whitney special tapping machine. Number of Operators per Machine—One. Work-Holding Devices—Held on center and rest at rear end, Fig. 696; details, Fig. 697. Tool-Holding Devices—Taps held in collar by pin. Cutting Tools—Three taps, Fig. 698. Cut Data—Speed, 40 r.p.m. Coolant—Cutting oil, ⅛-in. stream. Average Life of Tool Between Grindings—2,000 pieces. Gages—Fig. 699, thread diameter and depth. Production—40 per hr.

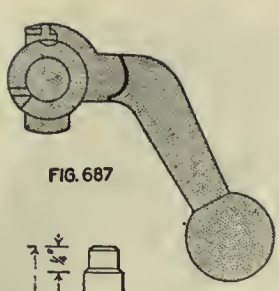

FIG. 687

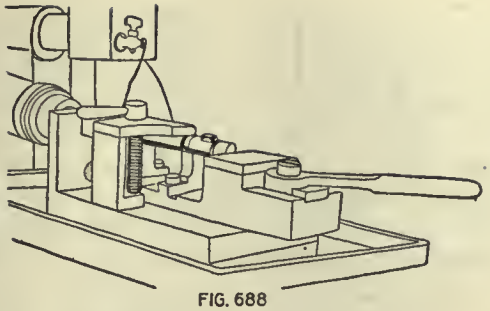

FIG. 688

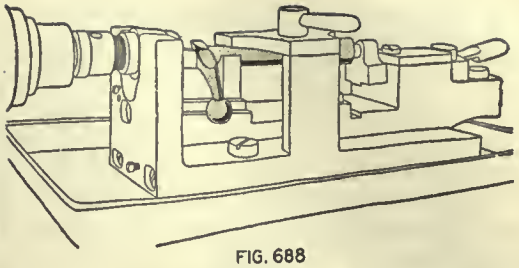

FIG. 688

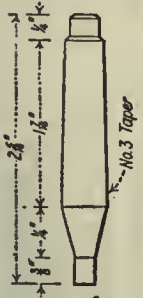

FIG. 689

OPERATION 34

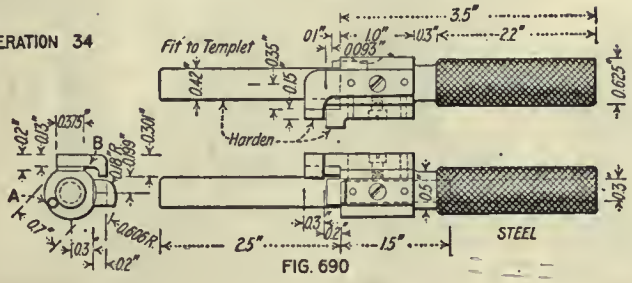

FIG. 690

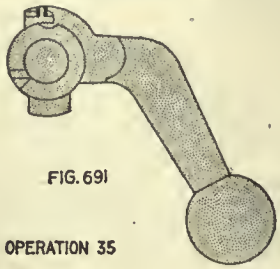

FIG. 691

OPERATION 35

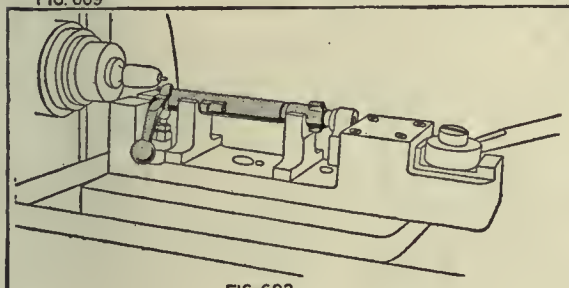

FIG. 692

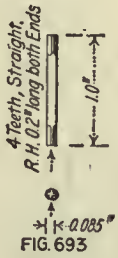

FIG. 693

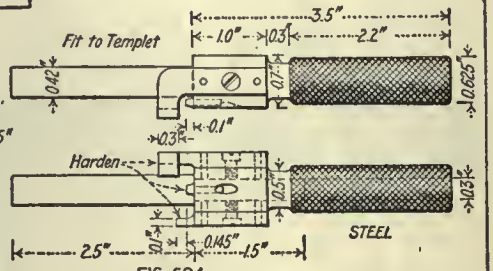

FIG. 694

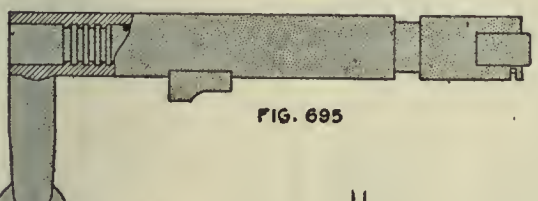

FIG. 695

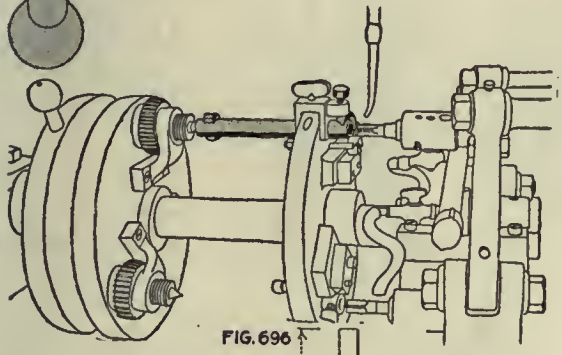

FIG. 696

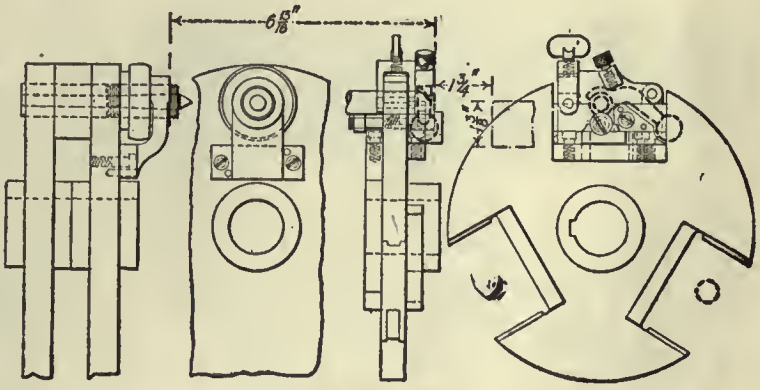

FIG. 697

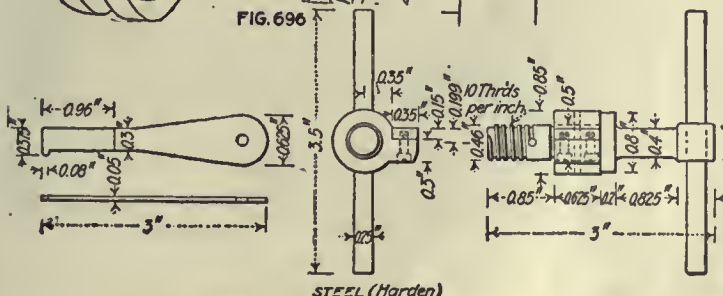

FIG. 699

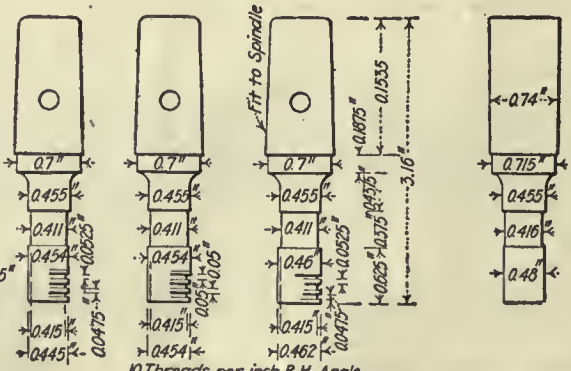

FIG. 698

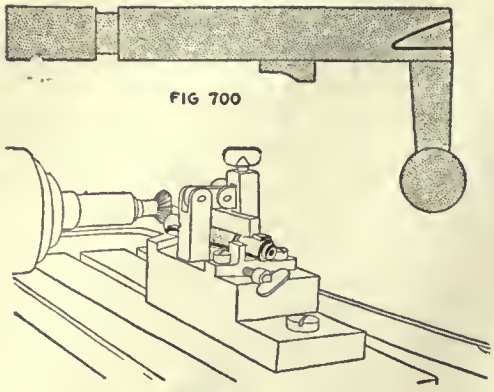

FIG. 700

FIG. 701

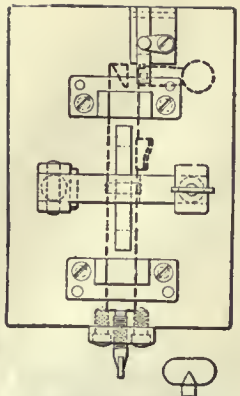

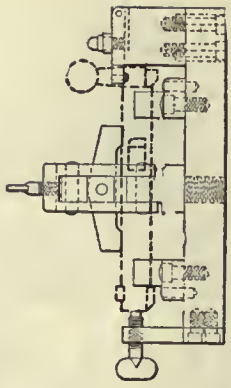

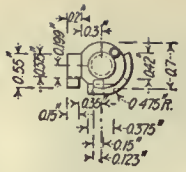

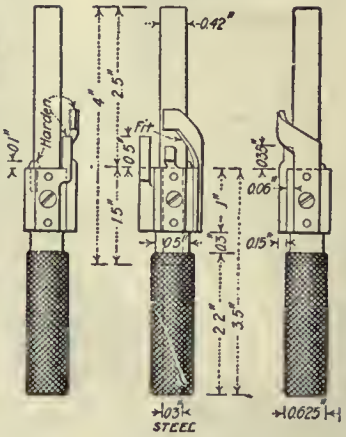

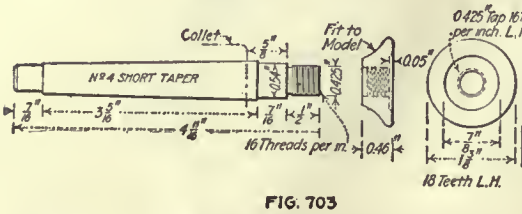

FIG. 703

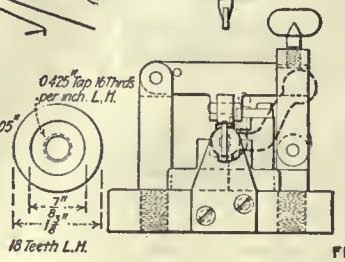

FIG. 702

OPERATION 37

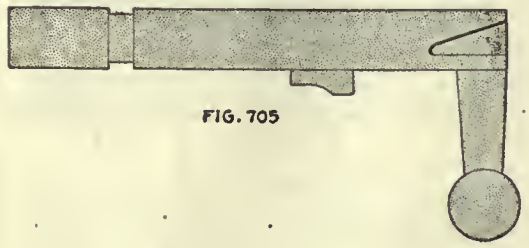

FIG. 705

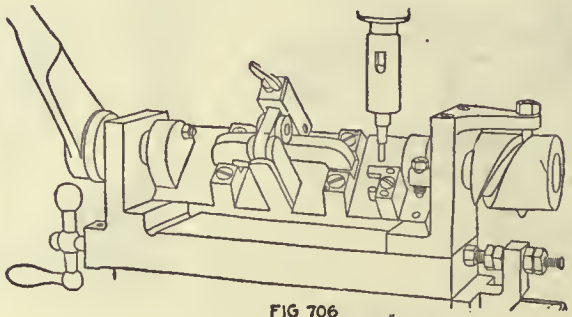

FIG 706

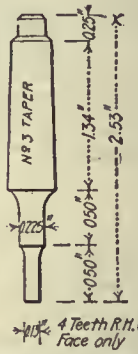

FIG. 708

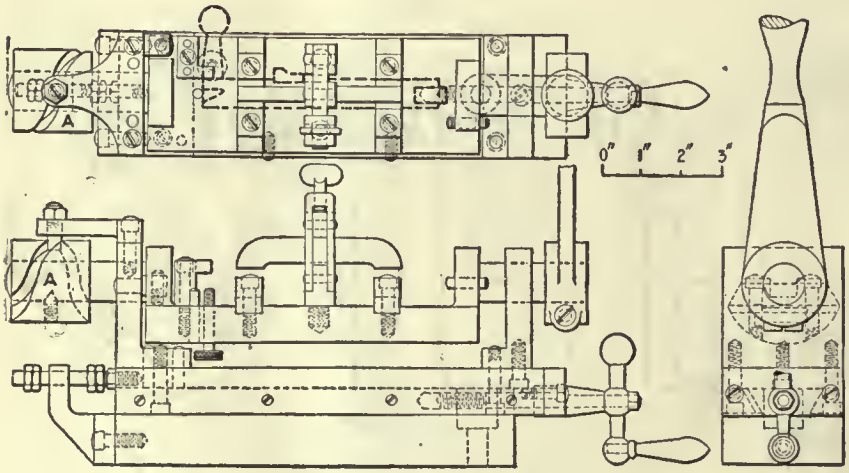

FIG. 707

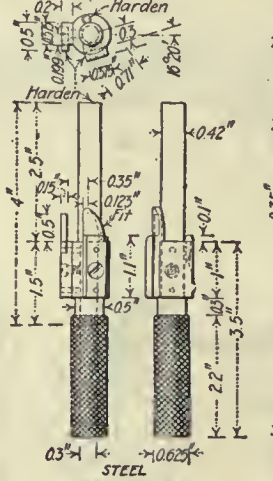

FIG. 709

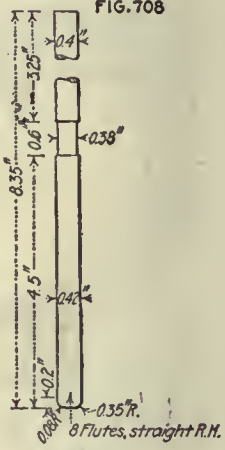

FIG. 710

OPERATION 38

OPERATION 37. ROUGH MILLING FOR COCKING CAM

Transformation—Fig. 700. Machine Used—Garvin No. 3 hand miiler. Number of Operators per Machine—One. Work-Holding Devices—Clamped to forms, Fig. 701; details in Fig. 702. Tool-Holding Devices—Taper shank. Cutting Tools—Form cutter, Fig. 703. Cut Data—Speed, 200 r.p.m.; hand feed. Coolant—Cutting oil, $\frac{1}{16}$-in. stream. Average Life of Tool Between Grindings—1,000 pieces. Gages—Fig. 704, location from under side of handle. Production—80 per hr.

OPERATION 38. HAND MILLING FOR COCKING CAM

Transformation—Fig. 705. Machine Used—Ames Manufacturing Co. 16-in. upright drilling machine. Number of Operators per Machine—One. Work-Holding Devices—Rotating fixture, Fig. 706; details in Fig. 707; cam A controls movement of bolt. Tool-Holding Devices—Taper shank. Cutting Tools—End miii, Fig. 708. Number of Cuts—One. Cut Data—Speed, 600 r.p.m.; hand feed. Coolant—Cutting oil, $\frac{1}{16}$-in. stream. Average Life of Tool Between Grindings—560 pieces. Gages—Fig. 709, shape and location. Production—40 per hr.

OPERATION JJ. REMOVING BURRS LEFT BY OPERATION 38, WITH REAMER

Number of Operators—One. Description of Operation—Removing burrs thrown up by operation 38. Apparatus and Equipment Used—Reamer, Fig. 710. Production—500 per hr.

poses. The fixtures or attachments used for cutting the locking cams or inclining the bolt afford a good example of this, the simplicity of the whole device being clearly shown in Fig. 706. This is a rotating or rocking fixture, in which the work holder is swung on trunnions. These trunnions slide in their bearings, as well as rotating, the

end motion being due to the cam slot shown at the left end. The end movement can only take place as the piece is rotated by means of the handle on the other trunnion, and the amount of this movement is limited by suitable stops at the bottom of the lever.

The predominance of millers is very noticeable, and on these machines are performed some operations that we should be apt to consider lathe work. A case in point is the milling of the front ends of the bolt, as shown in Fig. 712. This, together with the turning of the body of the bolt, as previously shown, would probably be considered lathe jobs in most places. Yet the fact that gun and similar shops are more plentifully supplied with millers than lathes is probably largely responsible for this apparent preference.

Burrs are one of the things that are always in evidence after a machine operation, and they are always in the way where a piece is to be finished all over, as in most rifle parts. Usually, the hand or rotary file is the only tool that can be used, but an exception is found in operations 40 and 41, where a special file comes into play, as in Fig. 724-C. This is held in the hand, the bolt body is slipped into the opening, and a few twists of the hands clear away the burrs left in milling the ejector slot.

The length of the bolt is very important, as the front end holds the cartridge in the chamber and there must be no room for it to be forced back against the bolt. The "head space" is one of the vital points, this holding the cartridge firmly in place against the recoil of the discharge. The counterboring of this head space is therefore divided into a roughing and a finishing operation, the first being done on a vertical drilling machine or miller and the latter in a special fixture with a hand facing tool. The latter has a stop that can be very easily adjusted.

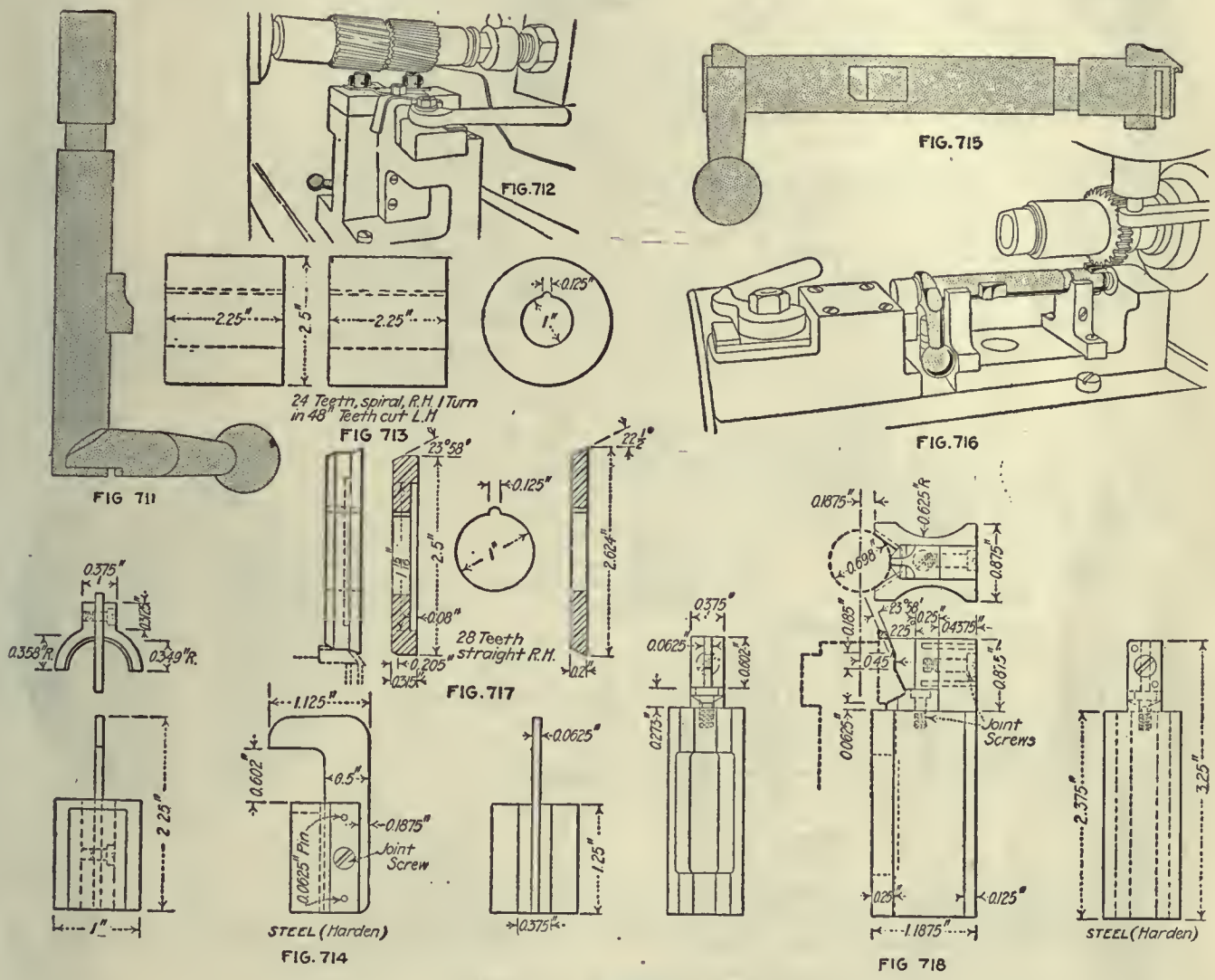

FIG. 711, 712, 713, 714 OP. 39 - FIG. 715, 716, 717, 718 OP. 44

OPERATION 39. MILLING TO REMOVE STOCK, FRONT END; RUN WITH OPERATIONS 20 AND 46

Transformation—Fig. 711. Machine Used—Pratt & Whitney No. 2 Lincoln miller. Number of Machines per Operator—One. Work-Holding Devices—Work clamped to angle plate in upright position, Fig. 712; two at one setting. Tool-Holding Devices—Standard arbor. Cutting Tools—Two cutters, Fig. 713. Number of Cuts—One. Cut Data—Speed, 50 r.p.m.; ⅝-in. feed. Coolant—Cutting oil, put on with brush. Average Life of Tool Between Grindings—1,500 pieces. Gages—Fig. 714. Production—50 per hr. Note—this is run with operation 46.

OPERATION 44. HAND MILLING TOP OF UPPER LOCKING LUG

Transformation—Fig. 715. Machine Used—Garvin No. 3 hand miller. Number of Operators per Machine—One. Work-Holding Devices—Held on forms, clamped at ends, Fig. 716. Tool-Holding Devices—Taper-shank arbor. Cutting Tools—Form cutters, Fig. 717. Number of Cuts—One. Cut Data—Speed, 150 r.p.m.; hand feed. Coolant—Cutting oil, ⅛-in. steam. Average Life of Tool Between Grindings—2,000 pieces. Gages—Fig. 718, shape and height from body. Production—100 per hr. Note—Working points, body and ends.

FIG. 719

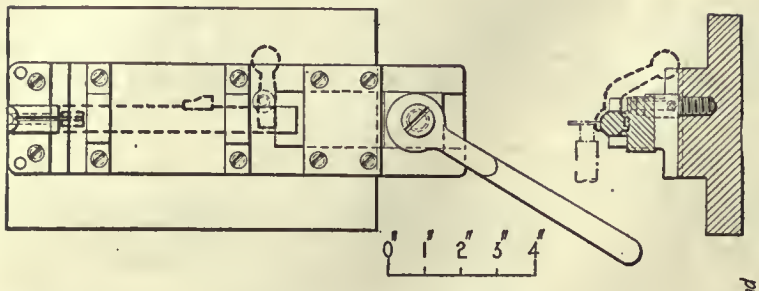

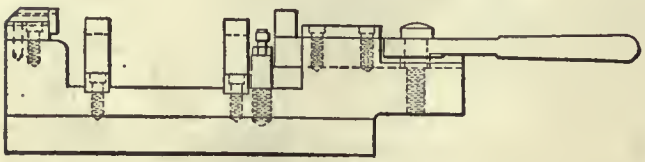

FIG. 721

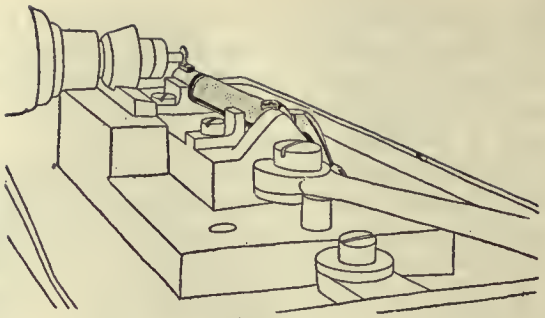

FIG. 720

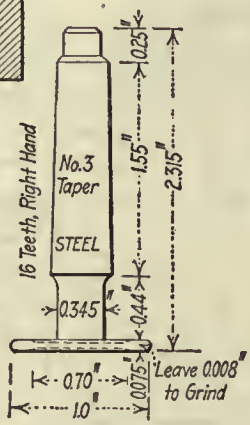

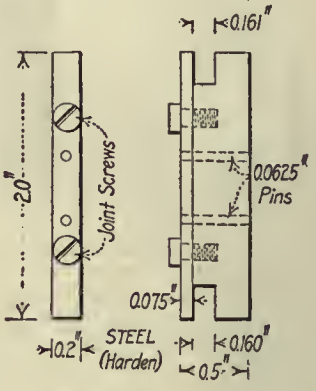

FIG. 722

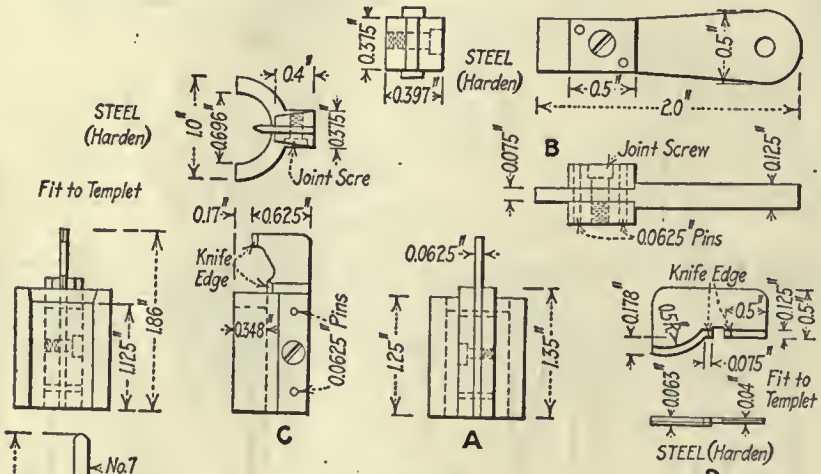

FIG. 723

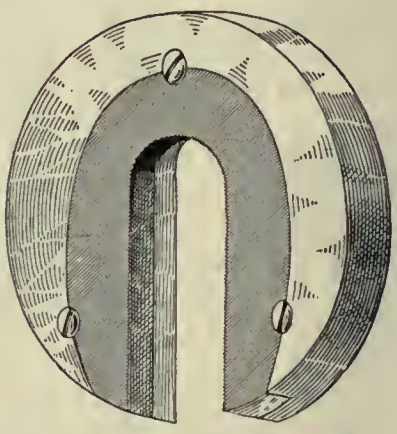

FIG. 724-C

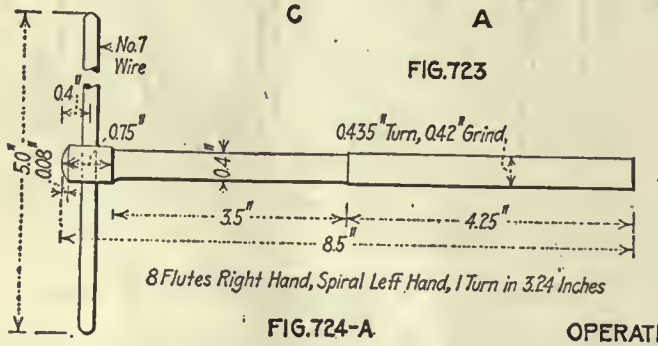

FIG. 724-A

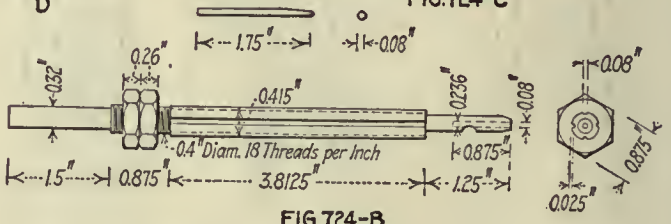

FIG. 724-B

OPERATION 40 & 41

OPERATIONS 40 AND 41. HAND MILLING EJECTOR SLOT, TOP AND BOTTOM

Transformation—Fig. 719. Machine Used—Whitney Manufacturing Co. hand miller, Fig. 720, form and roller used. Number of Operators per Machine—One. Work-Holding Devices—Held on forms, clamped at end, Fig. 721; form below the roller guides cutter to proper contour. Tool-Holding Devices—Taper shank. Cutting Tools—$\frac{1}{4}$-in. slotting cutter, Fig. 722. Number of Cuts—One. Cut Data—Speed, 500 r.p.m.; hand feed. Coolant—Cutting oil, $\frac{1}{16}$-in. stream. Average Life of Tool Between Grindings—1,000 pieces. Gages—Fig. 723; A, location from side; B, width of slot; C, location with barrel; D, contour of slot. Production—75 per hr. Note—Work-holding points, body and ends.

OPERATION LL. REMOVING BURRS FROM WELL WITH REAMER

Number of Operators—One. Description of Operation—Removing burrs from well. Apparatus and Equipment Used—Hand reamer, Fig. 724-A; firing-pin reamer, Fig. 724-B. Production—300 per hr.

OPERATION 44½. REMOVING BURRS WITH HAND TOOL, REAR OF FRONT LUG

Number of Operators—One. Description of Operation—Removing burrs thrown up by operation 14. The special C-shaped file is held in one hand and the bolt in the other and turned in opposite direction. Apparatus and Equipment Used—Fig. 724-C. Production—175 per hr.

The gage is practically a receiver with the addition of an adjustable stop that locates the distance from the bottom of the hand space to the back end, Fig. 730-A.

This method of using as a gage a piece into which the part fits, or a duplicate of it, is quite common here and has much to recommend it for general shop practice.

The thread in the bolt is the only one in the whole rifle in which the male screw turns while the rifle is in use. The sleeve is held from turning as the bolt is rolled up a quarter turn, and brought back for loading and cocking. This gives a quarter turn of the sleeve screw in the bolt each time the bolt mechanism is operated and puts more or less wear on the bolt thread in both the bolt and sleeve. moves a quarter turn in its groove during the action of the bolt. This holds the front end of the cartridge extractor to the bolt and allows the bolt to turn while the extractor slides back in its groove.

In all work of this kind where close fits are demanded and where only very small variations can be tolerated, we see the great difficulty in getting away from the final

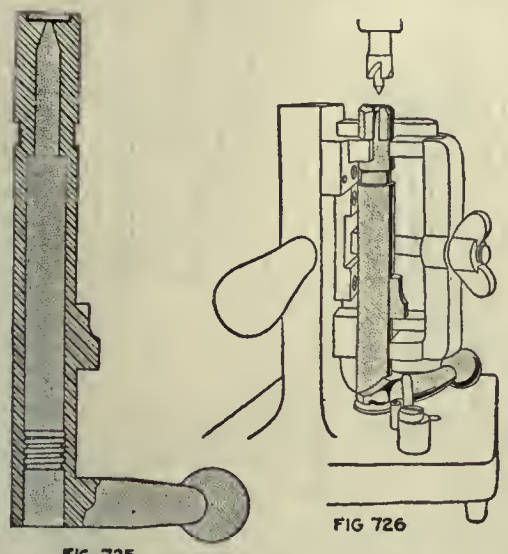

FIG. 725

FIG 726

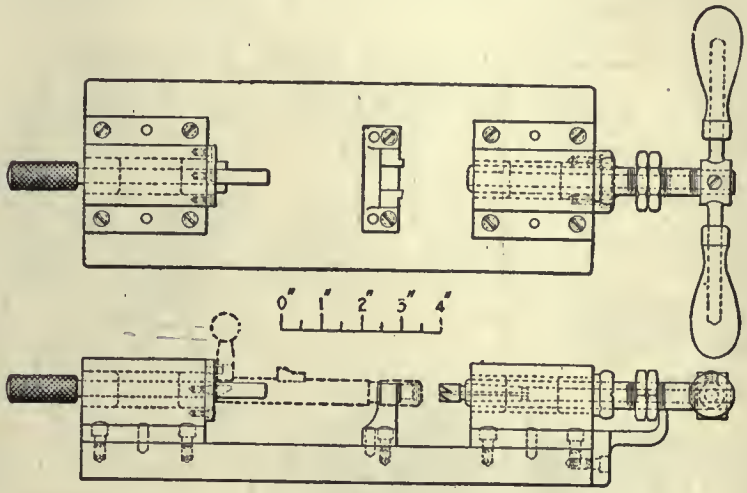

FIG 728

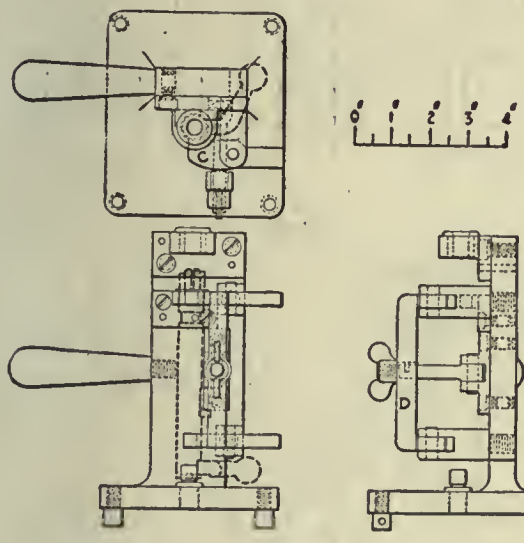

FIG. 727

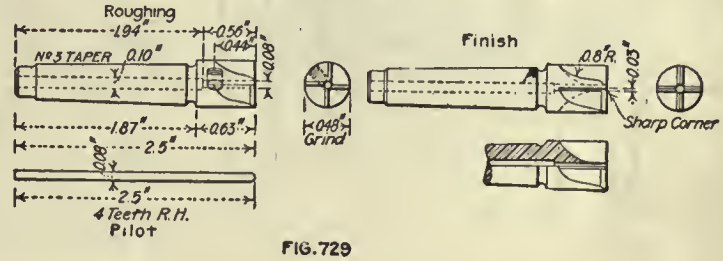

FIG.729

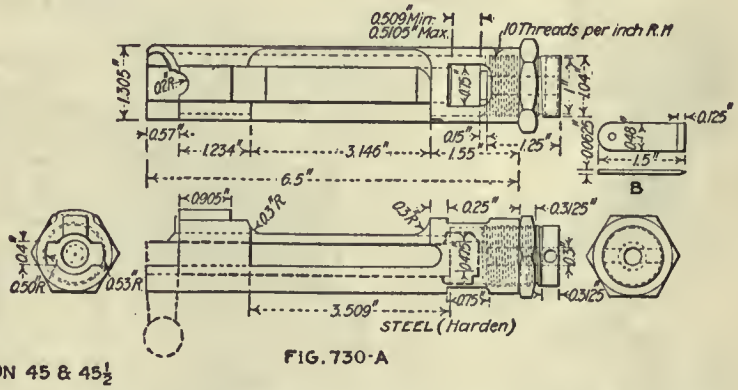

FIG. 730-A

OPERATION 45 & 45½

OPERATIONS 45 AND 45½. COUNTERBORING FOR HEAD SPACE, ROUGH AND FINISH

Transformation—Fig. 725. Machine Used—Pratt & Whitney 14-in. upright three-spindle drilling machine. Number of Operators per Machine—One. Work-Holding Devices—Drill jig, Fig. 726; bolt handle stops against a stop, while clamps are drawn down on body by an equalizer bar; details in Fig. 727; final finishing is done in hand fixture, Fig. 728. Tool-Holding Devices—Taper shank. Cutting Tools—Two counterbores with pilot, Fig. 729. Number of Cuts—Two. Cut Data—Roughing speed, 260 r.p.m.; hand feed; finishing cut at 85 r.p.m. Coolant—Cutting oil, ⅛-in. stream. Average Life of Tool Between Grindings—1,000 pieces. Gages—Fig. 730; A, total length from bottom of counterbore to back end; B, diameter of counterbore and concentricity with hole, also acts as a straight-edge across end. Production—80 per hr. Note—Lower end of bolt is centered by fixed plug.

This is why the thread in this case is so much deeper than the thread by which the receiver and barrel are fastened together. It is also a fairly long thread, so as to distribute the wear as much as possible. The amount of work done, however, is so slight that the wear is almost negligible, the only pressure on the thread being due to compressing the main spring.

In a similar way the extractor collar which encircles the bolt, in the special shallow groove provided for it. hand-finishing touches. These are noticeable where all the close-fitting operations come together, such as the barrel and the receiver, the sleeve and the bolt, the final length of the bolt when locked in place, the projection of the firing pin and other similar places. Here, too, is where the value of actual experience in handling this work counts, as many have found to their sorrow. Long experience with any fine mechanism gives a familiarity and an ability that it is extremely difficult to duplicate.

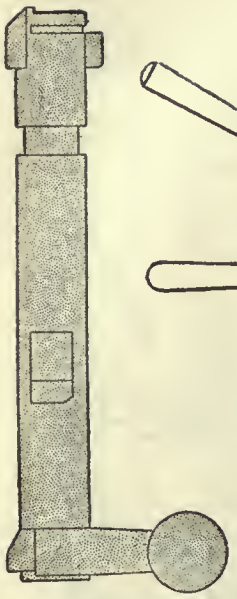

FIG.731

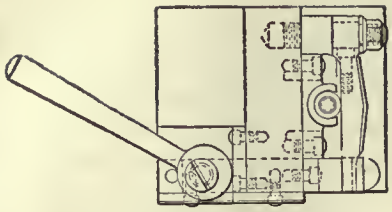

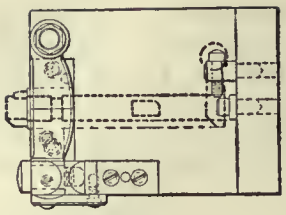

FIG.733

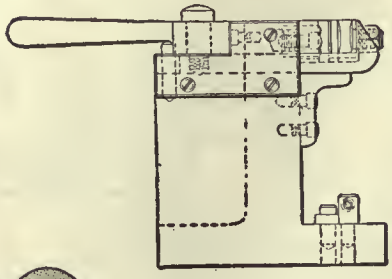

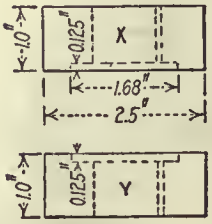

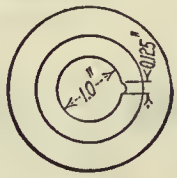

X-Cut 28 Teeth, Spiral Left Hand, 1 Turn in 48 Inches, Teeth cut Left Hand on Face and Right Side

Y-Cut 28 Teeth, Spiral Right Hand; 1 Turn in 48 Inches, Teeth cut Right Hand on Face and Left Side

FIG.734

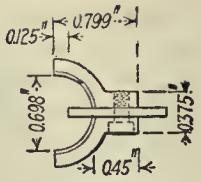

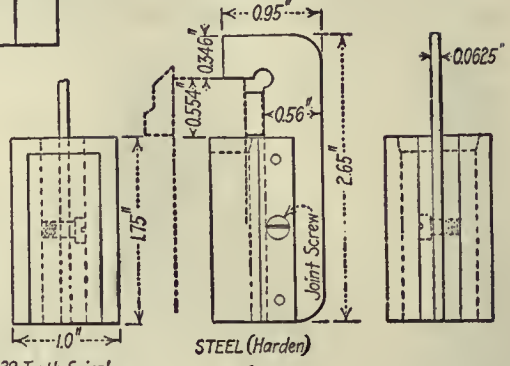

A

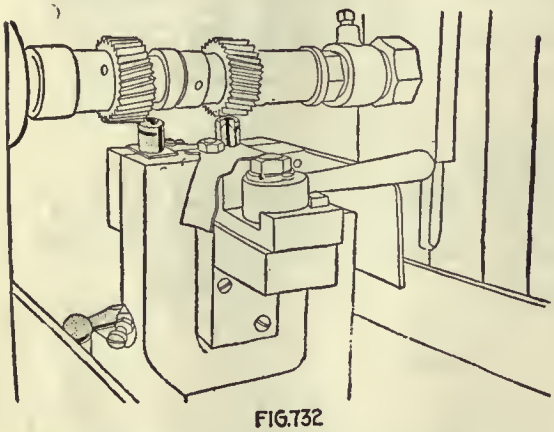

FIG.732

OPERATION 46

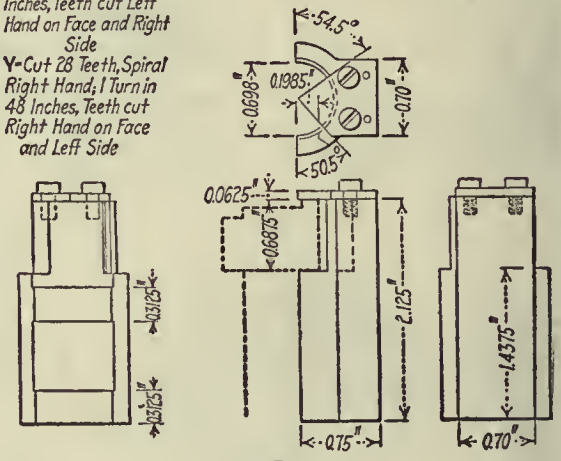

B

FIG.735

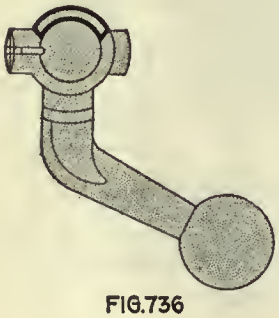

FIG.736

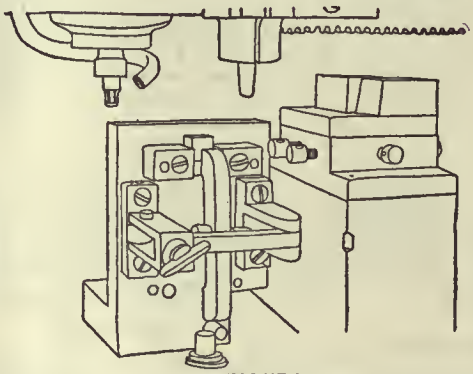

FIG.737

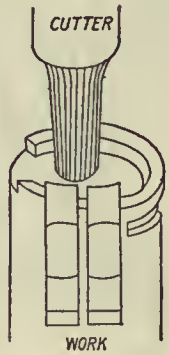

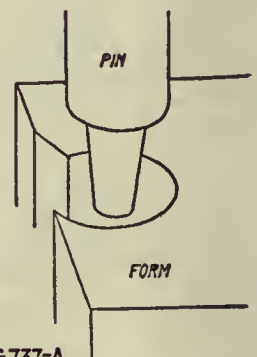

FIG.737-A

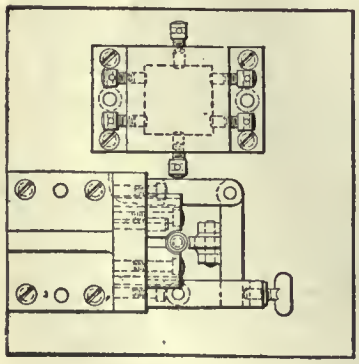

FIG.738

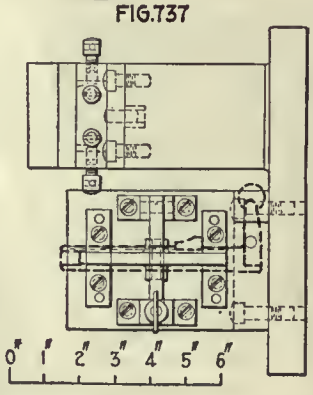

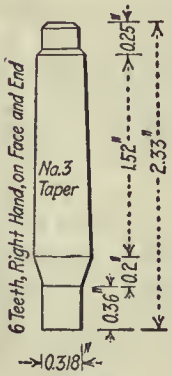

FIG.739

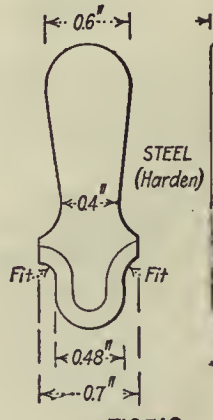

FIG.740

OPERATION 47

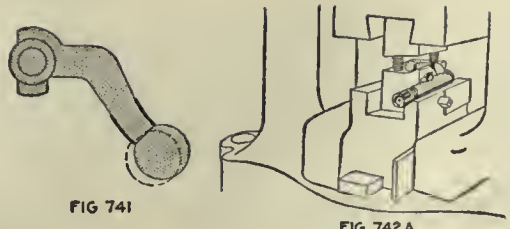

FIG 741

FIG.742A

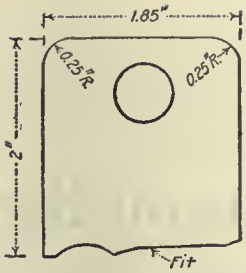

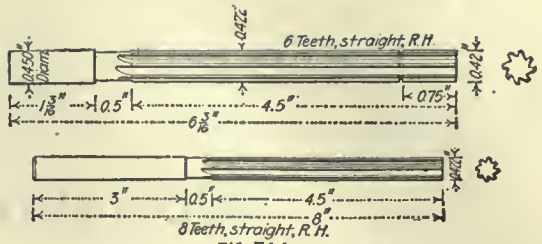

FIG.744

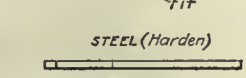

FIG 743

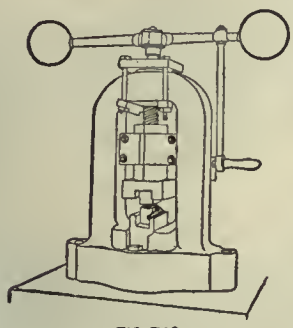

FIG 742

FIG.746A

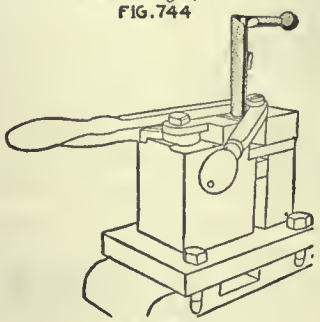

FIG.748

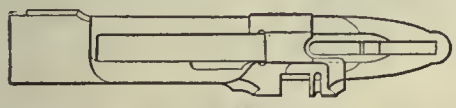

FIG. 746B

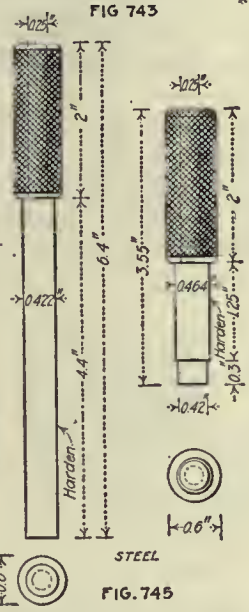

FIG. 745

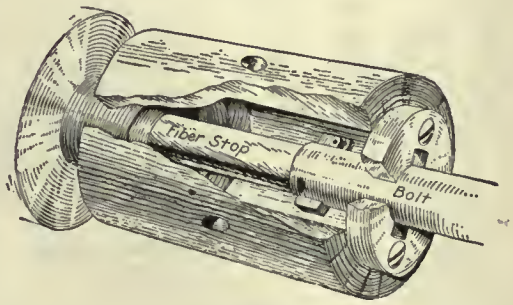

FIG.748A

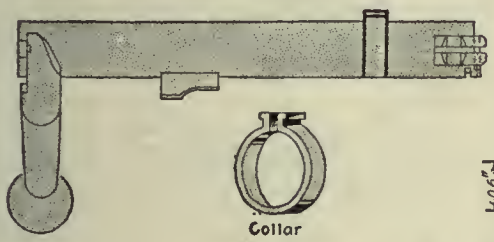

FIG.747

FIG.741,742,743 OP.58-FIG.744,745 OP.59-FIG.746 OP.64
FIG.747,748 OP 54-FIG.748A OP.55

OPERATION 46. MILLING FRONT END TO FINISH; RUN WITH OPERATIONS 20 AND 39

Transformation—Fig. 731. Machine Used—Pratt & Whitney No. 2 Lincoln miiier. Number of Machines per Operator—One. Work-Holding Devices—Work ciamped upright on fixture, Fig. 732; details in Fig. 733. Tooi-Hoiding Devices—Standard arbor. Cutting Tools—Two miiling cutters, Fig. 734. Cut Data—Speed, 50 r.p.m.; 5/8-in. feed. Coolant—Cutting oil, put on with brush. Average Life of Tool Between Grindings—1,000 pieces. Gages—Fig. 735; A and B gage the long and short ends. Production—50 per hr.

OPERATION KK. REMOVING BURRS LEFT BY OPERATION 46, WITH HAND TOOL

Number of Operators—One. Description of Operation—Removing burrs thrown up by operation 46. Apparatus and Equipment Used—Hand tool used, similar to Fig. 729, but has a handie. Production—500 per hr.

OPERATION 47. PROFILING TO FINISH (MATCHING HEAD AND SPACE)

Transformation—Fig. 736. Machine Used—Pratt & Whitney No. 2 profiier. Number of Operators per Machine—One. Work-Hoiding Devices—Heid upright on fixture shown in Fig. 737; details in Fig. 738; machining diagram, Fig. 737-A. Tooi-Hoiding Devices—Taper shank. Cutting Tools—End mill, Fig. 739. Number of Cuts—One. Cut Data—Speed, 600 r.p.m.; hand feed. Coolant—Compound, 1/8-in. stream. Average Life of Tool Between Grindings—400 pieces. Gages—Fig. 740, contour. Production—40 per hr.

OPERATION 58. BENDING HANDLE

Transformation—Fig. 741. Machine Used—Hoe hand screw press, Fig. 742. Number of Operators per Machine—One. Punches and Punch Hoiders—Bending dies, Fig. 742-A. Dies and Die Holders—Square-shank punch hoider, form-bending die. Gages—Fig. 743, contour. Production—120 per hr. Note—Bolt handle heated in iead pot to cherry red and offset in press shown.

OPERATION 59. REAMING FIRING-PIN HOLE

Number of Operators—One. Description of Operation—Reaming firing-pin hole. Apparatus and Equipment Used—Speed iathe and reamer, Fig. 744. Gages—Fig. 745, diameter. Production—125 pieces per hr. Note—Work heid in hand on center in tailstock.

OPERATION 64. FILING CAM, FITTING TO RECEIVER

Number of Operators—One. Description of Operation—Filing and fitting cam, and cornering. Apparatus and Equipment Used—Fiie. Production—8 per hr. Gages—746-A and B.

OPERATION 53. CASEHARDENING

Number of Operators—One. Description of Operation—Heat to 780 deg. C. (1,436 deg. F.) for 2½ to 3 hr.; quench in oil; pack with ¾ bone and ¼ leather. Apparatus and Equipment Used—Same as for receiver.

OPERATION 54. ASSEMBLING WITH EXTRACTOR COLLAR

Transformation—Fig. 747. Number of Operators—One. Description of Operation—Bending and assembiing coiiar to bolt; collar is heated to cherry red before bending. Apparatus and Equipment Used—Rockweii oil-burning forge; stand fixture for ciosing in collar, Fig. 748. Production—200 per hr.

OPERATION 55. FREEING EXTRACTOR COLLAR IN SPEED LATHE

Machine Used—Machine built at Hiii shops. Number of Operators per Machine—One. Work-Hoiding Devices—In hand. Tool-Holding Devices—Round wooden holder on spindie of machine, Fig. 748-A; brass piate on front catches extractor-coiiar lugs and turns coiiar on bolt, which is held in the hand; a loose beit on pulley ailows the operator to stop spindle by placing hand on outside of holder to change work. Cut Data—450 r.p.m. Cooiant—None. Production—400 per hr.

OPERATION 56. FILING EARS ON EXTRACTOR COLLAR

Number of Operators—One. Description of Operation—Filing the top, sides of ears to fit extractor, and cornering. Apparatus and Equipment Used—Fiie. Production—80 per hr.

OPERATION 52. POLISHING SURFACE

Number of Operators—One. Description of Operation—Poiishing outside surface of boit. Apparatus and Equipment Used—Wheel and polishing jack. Production—70 per hr.

OPERATION 57. BURRING BOLT-STOP NOTCHES, WITH OILSTONE

Number of Operators—One. Description of Operation—Burring stop notches. Apparatus and Equipment Used—Oilstone. Production—300 per hr.

OPERATION 65. BROWNING

Number of Operators—One. Description of Operation—Same as with barrel. Apparatus and Equipment Used—Same as with barrel.

Operations on the Sleeve

For a small piece this has an astonishing number of operations, and most of them fairly particular at that, as will be seen as the operations develop. It fits in the end of the bolt and becomes a part of it so far as the firing mechanism is concerned. The threaded end of the sleeve has to stand more or less wear as the bolt turns on it at every operation of the loading and firing action.

As with the other parts, it is well to study the details with considerable care so as to see just what the requirements are. This shows the groove and the indentations for the detent springs plunger and other small cuts.

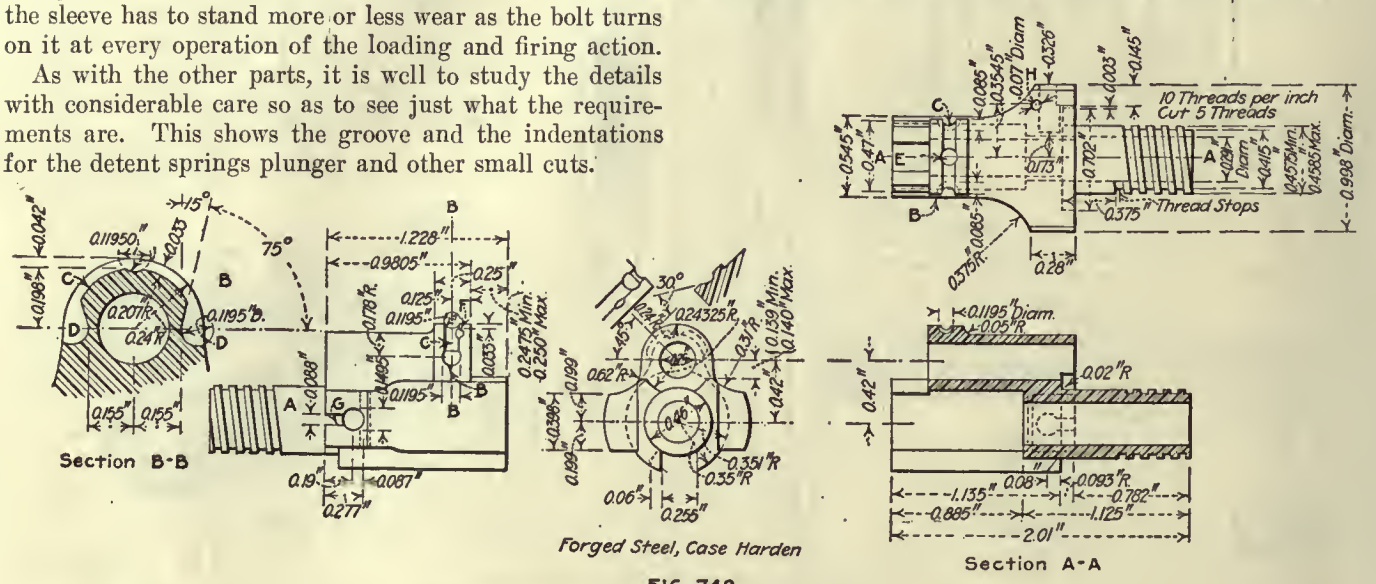

FIG. 749

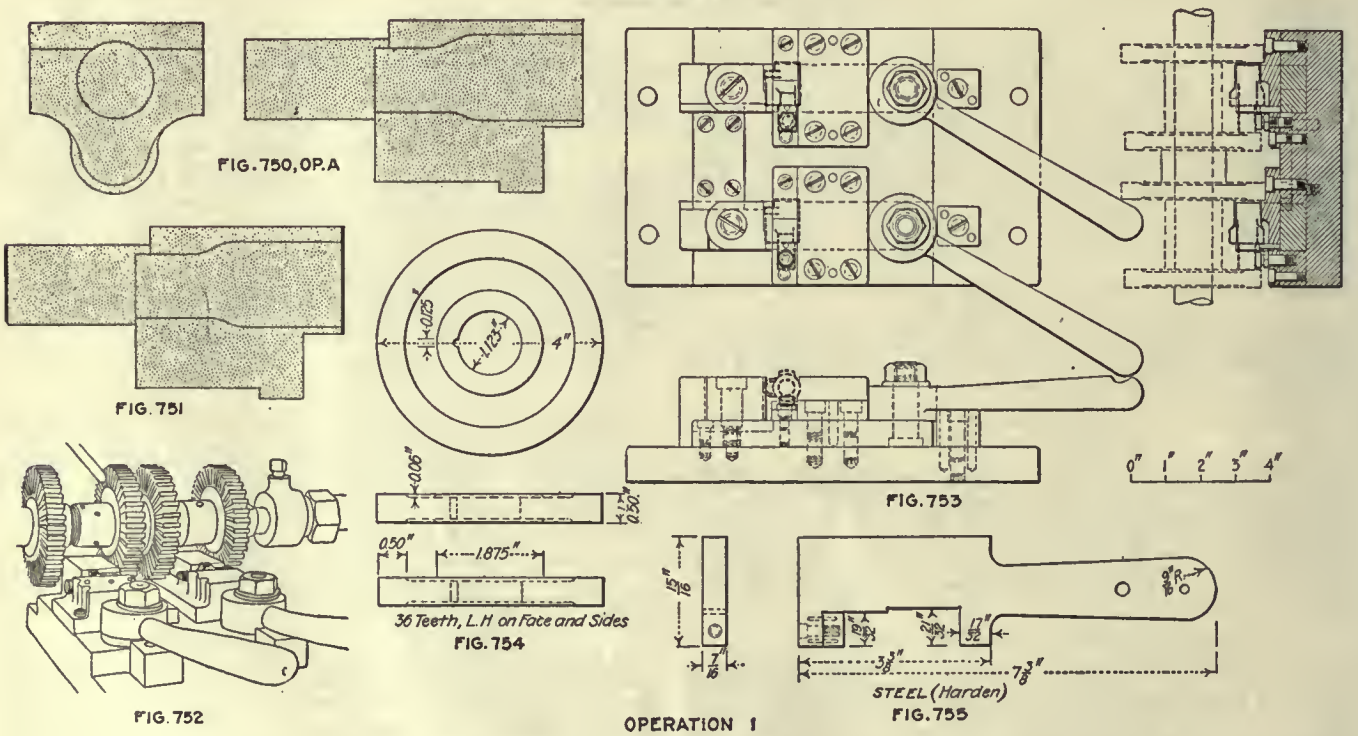

OPERATION A. FORGING FROM BAR

Transformation—Fig. 750. Number of Operators—One. Description of Operation—Forging sleeve from bar; size of bar, 0.80 in. square. Apparatus and Equipment Used—Billings & Spencer 400-lb. drop hammer. Production—120 per hr.

OPERATION B. ANNEALING

Number of Operators—One. Description of Operation—Packed in cast-iron pots with powdered charcoal; heated to 850 deg. C. (1,562 deg. F.) and left over night to cool. Apparatus and Equipment Used—Cast-iron pots; Brown & Sharpe annealing furnaces.

OPERATION B-1. PICKLING

Number of Operators—One. Description of Operation—Sleeves are placed in wire baskets and then in wooden tanks holding the pickling solution, in which the sleeves are left about 10 min.; only one pickling; pickling solution is 9 parts water to 1 part sulphuric acid. Apparatus and Equipment Used—Wire basket, wooden pickling tanks, hoisting-pulley blocks.

OPERATION C. TRIMMING (COLD)

Machine Used—Bliss back-geared press. Number of Operators per Machine—One. Punches and Punch Holders—Punch held by square shank. Dies and Die Holders—Held in shoe by setscrew. Average Life of Punches—15,000 pieces at one grinding. Dies—Same. Production—500 per hr.

OPERATION 1. MILLING ENDS

Transformation—Fig. 751. Machine Used—Pratt & Whitney No. 2 Lincoln miller, Fig. 752. Number of Operators per Machine—One. Work-Holding Devices—Cam-operated vise jaws, Fig. 753. Tool-Holding Devices—Standard arbor. Cutting Tools—Four side-milling cutters. Fig. 754. Number of Cuts—One. Cut Data—60 r.p.m.; ⅝-in. feed. Coolant—Cutting oil, ⅛-in. stream. Average Life of Tool Between Grindings—1,500 pieces. Gages—Fig. 755. Production—60 per hr.

FIG. 756

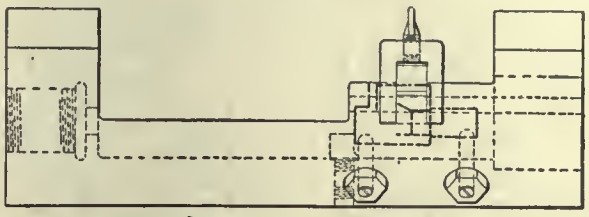

FIG. 757

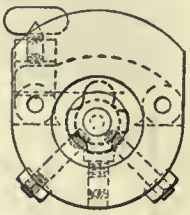

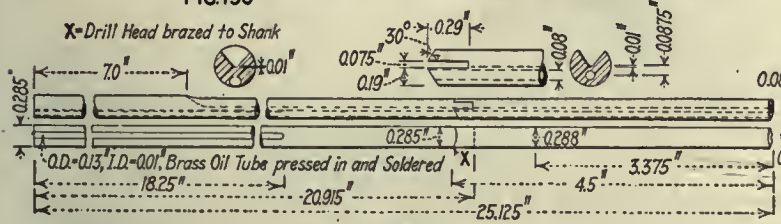

FIG. 758

FIG. 759

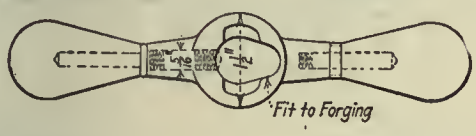

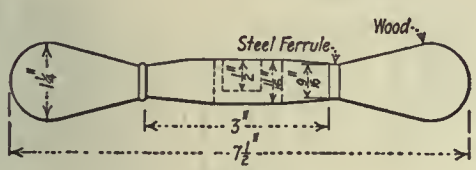

FIG. 760

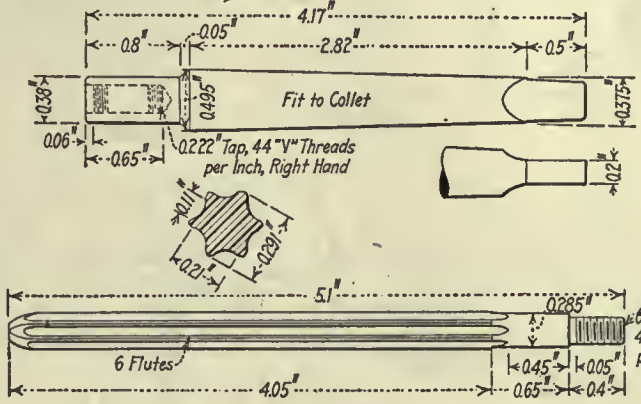

OPERATION 2

FIG. 761

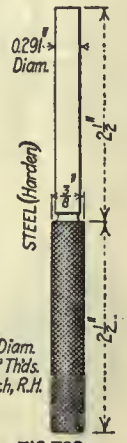

FIG. 762

FIG. 763

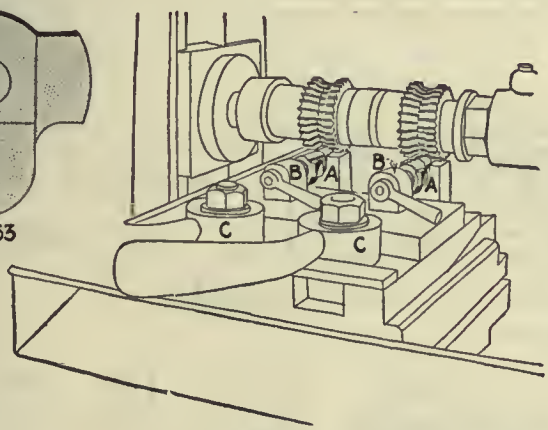

FIG. 764

OPERATION 5

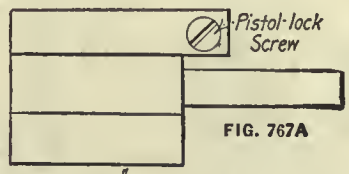

FIG. 767A

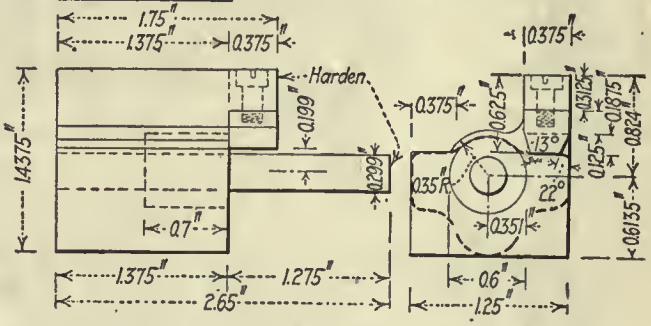

OPERATION 2. DRILLING LARGE HOLE

Transformation—Fig. 756. Machine Used—Pratt & Whitney horizontal drilling machine, similar to Fig. 582. Number of Operators per Machine—One. Work-Holding Devices—Work held on pins, clamped to revolving fixture, Fig. 757. Tool-Holding Devices—Drill held in collet by setscrew. Cutting Tools—Barrel type of drill, Fig. 758. Number of Cuts—One. Cut Data—1,200 r.p.m.; ⅛-in. feed. Coolant—Cutting oil, ¼-in. stream. Average Life of Tool Between Grindings—25 pieces. Gages—Fig. 759, diameter of hole. Production—40 per hr.

OPERATION 3. REAMING LARGE HOLE

Transformation—Same as Fig. 756. Machine Used—Drilling machine made at shops. Number of Operators per Machine—One. Work-Holding Devices—Work held by hand in special holder, Fig. 760. Tool-Holding Devices—Reamers held in collet by setscrew. Cutting Tools—Scrape reamer, Fig. 761. Number of Cuts—One. Gages—Fig. 762. Production—40 per hr. of under side with relation to bore; B, radius of bottom. Production—80 per hr. Note—Work-holding points, hole and under side.

OPERATION 5. MILLING BOTTOM LENGTHWISE

Transformation—Fig. 763. Machine Used—Pratt & Whitney No. 2 Lincoln miller. Number of Operators per Machine—One. Work-Holding Devices—On stud at A and mandrel B; clamped on ends by cam C, Fig. 764; details in Fig. 765. Tool-Holding Devices—Standard arbor. Cutting Tools—Form cutters, Fig. 766. Number of Cuts—One. Cut Data—90 r.p.m.; ⅝-in. feed. Coolant—Compound, two ¼-in. streams. Average Life of Tool Between Grindings—2,000 pieces. Gages—Fig. 767; A, position

OPERATION 6. MILLING RIGHT AND LEFT SIDES OF LUGS

Transformation—Fig. 768. Machine Used—Pratt & Whitney No. 2 Lincoln miller. Number of Operators per Machine—One. Work-Holding Devices—On stud and mandrel clamped to end, Fig. 769; Fig. 770 shows details of fixed stud A, movable mandrel B and cams C. Tool-Holding Devices—Standard arbor. Cutting Tools—Two form cuters, Fig. 771. Number of Cuts—One. Cut Data—90 r.p.m.; ⅝-in. feed. Coolant—Compound, two ¼-in. streams. Average Life of Tool Between Grindings—2,000 pieces. Gages—Fig. 772, radius of right and left lugs. Production—80 per hr. Note—Work-holding points, hole and under side.

made of Class D steel, 0.80 in. square in the rough, and drop forged in the usual manner. Full details of the sleeve are shown in Fig. 749. The material is treated in the same way as all other steel of the same class and is casehardened in much the same way as the receiver already described. The sleeve is threaded to fit the tapped hole in the back end of the bolt; but instead of being screwed firmly to the bolt, as is the case with the receiver and the barrel, the bolt has a 90-deg. movement in the sleeve between its loading and its firing position. The working points are the hole and under side of the right-hand lug. These are also used in gaging the various operations.

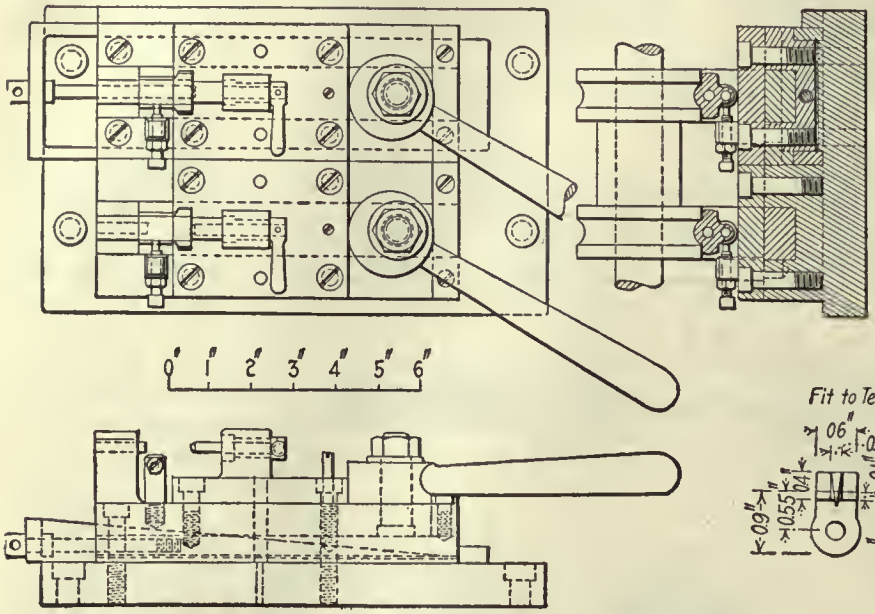

FIG. 765

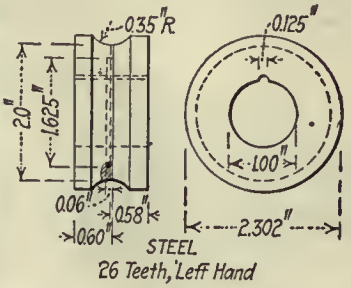

FIG. 766

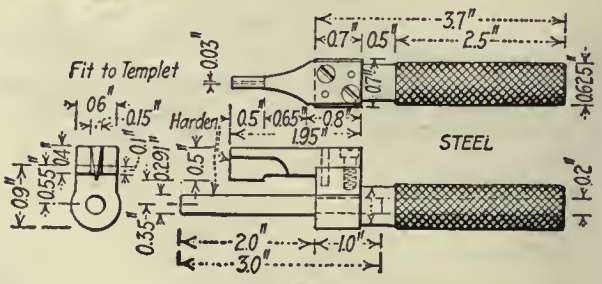

FIG. 767-B

OPERATION 5

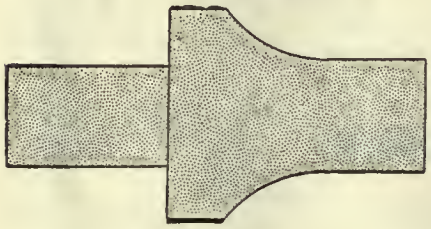

FIG. 768

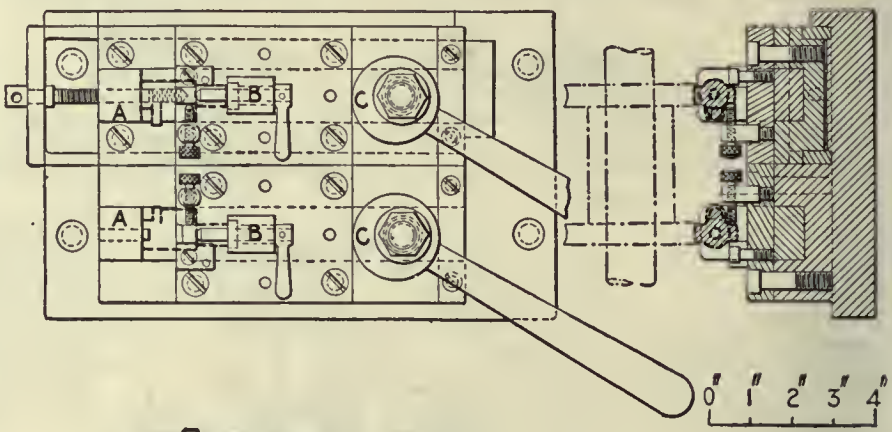

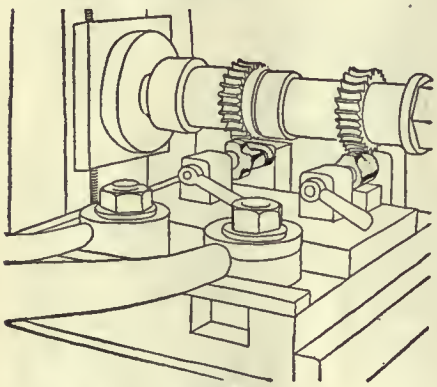

FIG. 769

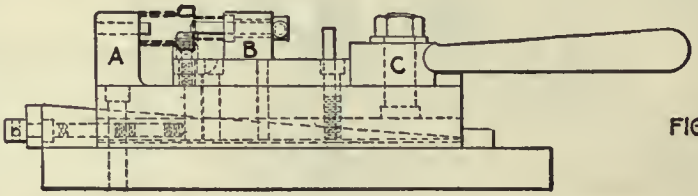

FIG. 770

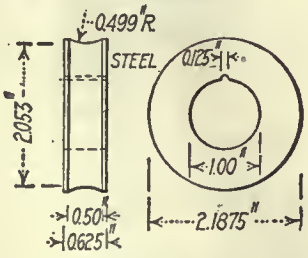

24 Teeth, Left Hand

FIG. 771

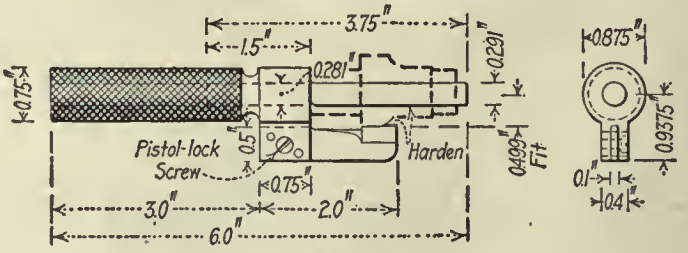

FIG. 772

OPERATION 6

The main points of the sleeve are the barrel *A*, safety-lock seat *B*, safety-lock plunger groove *C*, recess *D* for retaining the safety lock when turned to the right or left, the recess *E* for retaining the safety lock in dismounting the bolt mechanism, the bevel *F* for dismounting the safety lock from the sleeve, the sleeve-locking recess *G* and the sleeve-locking pin hole *H*. There are also the safety-lock spindle and the firing-pin hole, the cocking-piece groove and the undercut for the rear end of the bolt, but none of these, as it happens, are shown in Fig. 749.

OPERATION AA. REMOVING BURRS FROM FIRING-PIN HOLE

Number of Operators—One. Description of Operation—Removing burrs thrown up around firing-pin hole. Apparatus and Equipment Used—File and reamer, Fig. 773. Production—Production grouped with operations 5 and 6.

OPERATION 4. FACING REAR END

Transformation—Fig. 774. Machine Used—Pratt & Whitney 10-in. speed lathe. Number of Operators per Machine—One. Work-Holding Devices—Held on pilot with a wooden hand holder, Fig. 775; details of holder, Fig. 776. Tool-Holding Devices—Stud in tailstock. Cutting Tools—End mill, taper shank, Fig. 777. Number of Cuts—One. Cut Data—320 r.p.m.; hand feed. Coolant—Cutting oil, $\frac{1}{8}$-in. stream. Average Life of Tool Between Grindings—3,500 pieces. Gages—Fig. 778 length. Production—175 per hr.

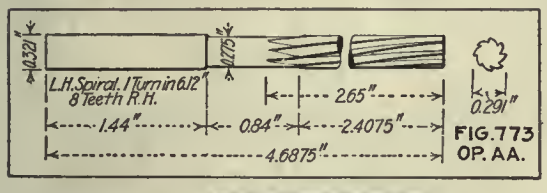

FIG. 773
OP. AA.

FIG. 774

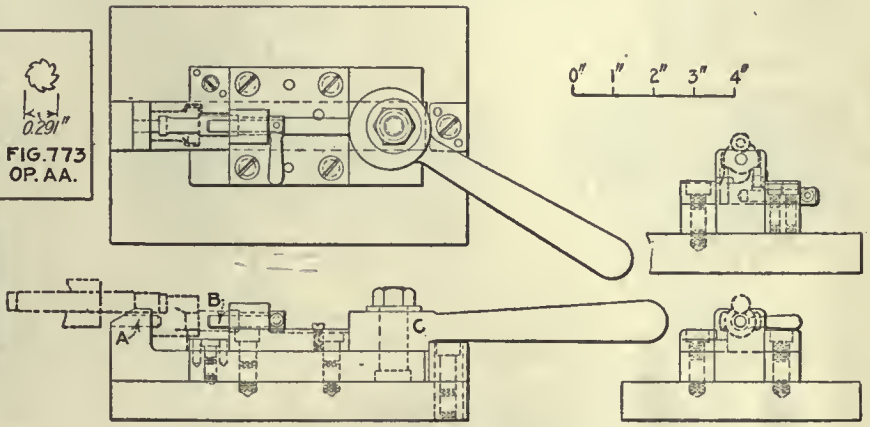

FIG. 776

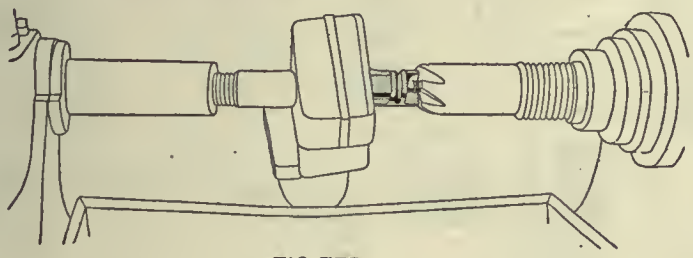
FIG. 775

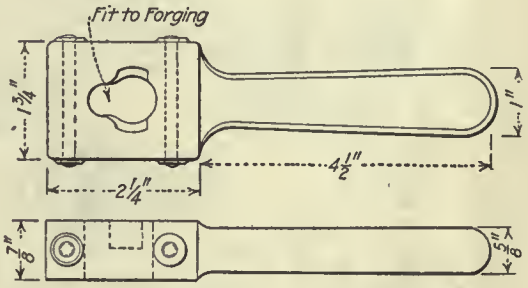

Holder (*Wood*)

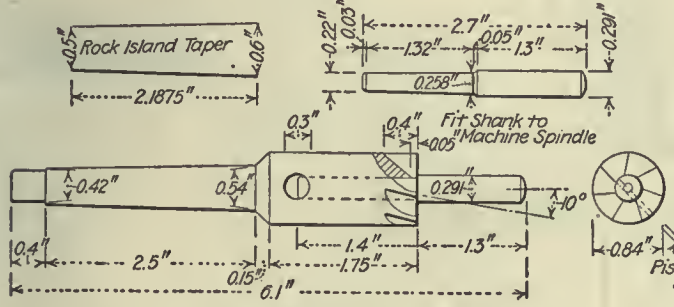

Cut 7 Teeth in End, R.H.
FIG 777

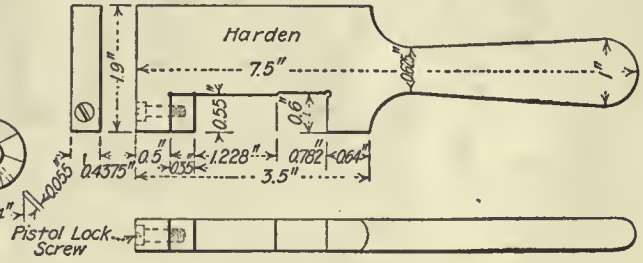

FIG. 778

OPERATION 4

OPERATIONS ON THE SLEEVE

Operation	
A	Forging from bar
B	Annealing
B-1	Pickling
C	Trimming
1	Milling ends
2	Drilling large hole
3	Reaming large hole
5	Milling bottom lengthwise (5, 6, AA combined)
6	Milling right and left sides of lugs
AA	Removing burrs from firing-pin hole
4	Facing rear end
7	Hollow-milling barrel and facing to length
BB	Removing burrs left by operation 7
8	Hand-milling for safety lock, rough
9	Drilling, reaming and counterboring safety-lock spindle hole in gang driller
DD	Reaming burrs from firing-pin hole
10	Milling right and left sides of body
13	Profiling over safety-lock spindle hole
EE	Removing burrs left by operation 10
14	Hand-milling seat for safety lock
11	Profiling over top of lugs and safety-lock spindle hole
FF	Removing burrs from firing-pin hole
21	Drilling three holes for safety-lock spindle
22	Hand-milling groove for safety-lock spindle spring
15	Drilling sleeve-lock and pin holes
GG	Removing burrs from sleeve-lock pin hole
17	Profiling locking-lug slot
HH	Removing burrs left by operation 17
18	Threading barrel
19	Counterboring cocking-piece seat
20	Milling cocking-piece slot
II	Removing burrs left by operation 20
JJ	Removing burrs from firing-pin hole
23	Milling matching groove recesses for safety-lock spring spindle
24	Filing edges of cocking-piece slot and safety-lock thumb-piece bearing
25	Reaming safety-lock spindle hole and countersinking firing-pin and safety-lock spindle holes
26	Rotary-filing matching safety-lock spindle recesses with spindle groove.
27	Polishing exterior surfaces
28	Filing, general cornering
29	Casehardening
30	Assembling with sleeve, lock pin and spring, and safety lock

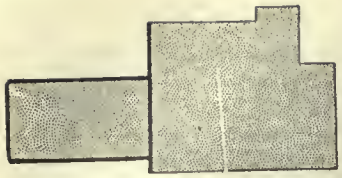

FIG. 779

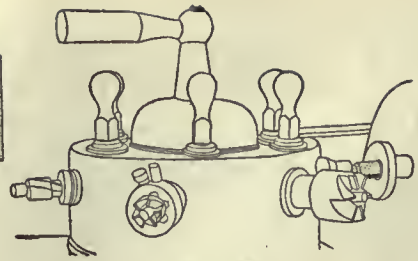

FIG. 780

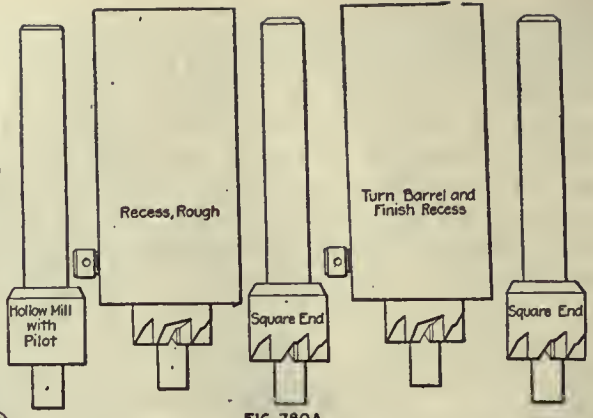

FIG 780A

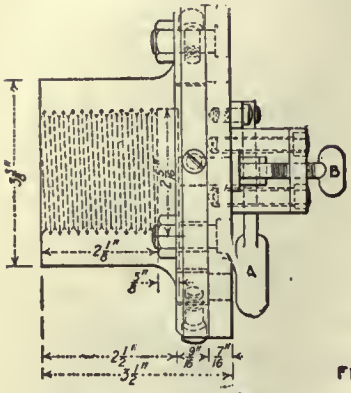

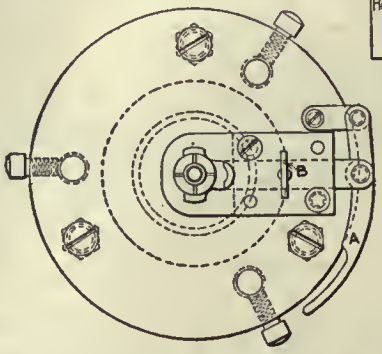

FIG. 781

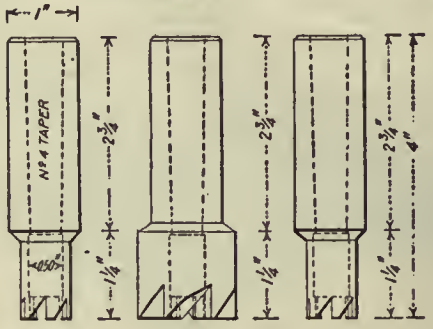

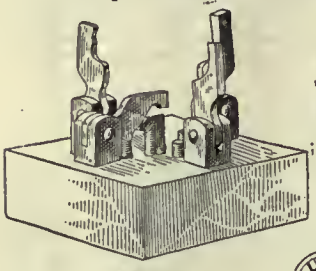

FIG. 783

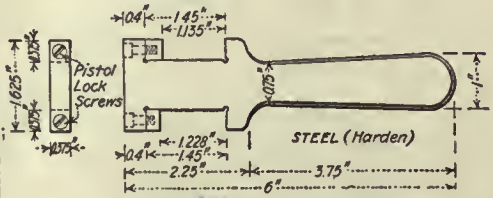

FIG. 783B

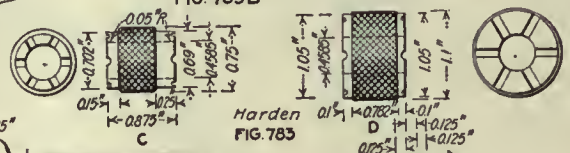

FIG. 783

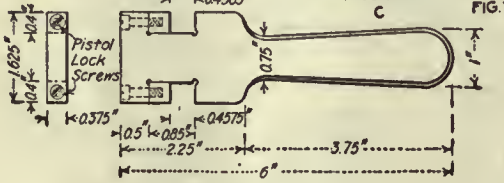

FIG 783A

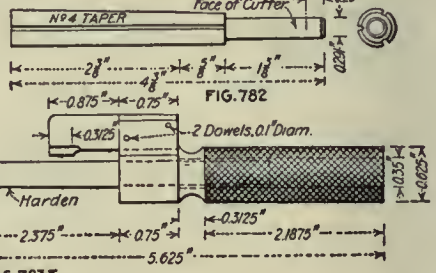

FIG. 782

FIG. 783E

OPERATION 7

FIG. 784

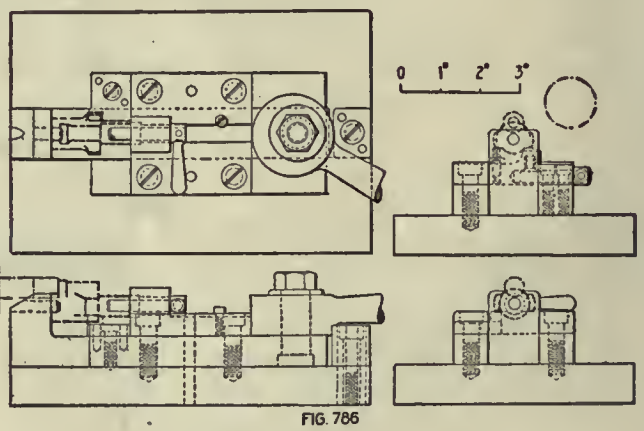

FIG. 786

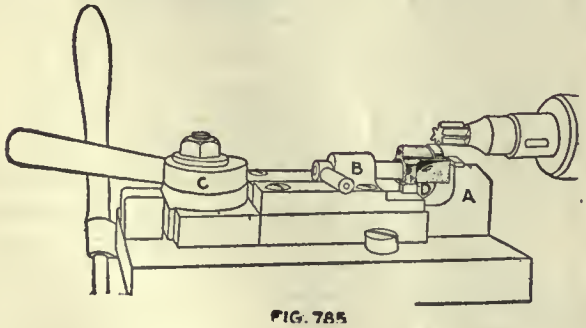

FIG. 785

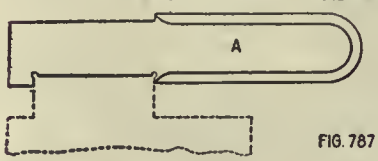

FIG. 787

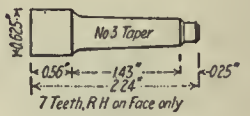

OPERATION 8

OPERATION 7. HOLLOW-MILLING BARREL AND FACING TO LENGTH

Transformation—Fig. 779. Machine Used—Pratt & Whitney 16-in. hand screw machine. Number of Operators per Machine—One. Work-Holding Devices—On stud in special chuck; Fig. 781, which is fastened to faceplate by three setscrews on studs; jaw is moved by lever A and held by thumb-screw B. Tool-Holding Devices—Turret of machine, Fig. 780; machine diagram, Fig. 780-A. Cutting Tools—Cutters, Fig. 782. Cut Data—200 r.p.m.; hand feed. Coolant—Cutting oil, ¼-in. stream. Average Life of Tool Between Grindings—200 pieces. Gages—Fig. 783; A, barrel diameter; B, length of body; C, length of barrel from undercut; D, length of barrel from shoulder; E, concentricity of barrel and hole. Production—20 per hr.

OPERATION BB. REMOVING BURRS LEFT BY OPERATION 7

Number of Operators—One. Description of Operation—Removing burrs thrown up by operation 7. Apparatus and Equipment Used—File. Production—Grouped with operation 8.

Cut Data—Two speeds (150 r.p.m. and 250 r.p.m.), fast for drilling, slow for reaming; hand feed. Coolant—Cutting oil, ⅛-in. stream. Average Life of Tool Between Grindings—200 pieces. Gages—Fig. 793; A, diameter of hole and counterbore; B, alignment of both holes with working point on under side. Production—40 per hr.

OPERATION DD. REMOVING BURRS FROM FIRING-PIN HOLE

Number of Operators—One. Description of Operation—Removing burrs from firing-pin hole left by operation 9. Apparatus and Equipment Used—Hand reamer (see Fig. 773) and file. Production—Grouped with operation 9.

OPERATION 10. MILLING RIGHT AND LEFT SIDES OF BODY

Transformation—Fig. 794. Machine Used—Pratt & Whitney No. 2 Lincoln miller. Number of Operators per Machine—One. Work-Holding Devices—On stud B, clamped at end by cam lever C, Fig. 795; located by stop A; details in Fig. 796. Tool-Holding Devices—Arbor. Cutting Tools—Form cutters, Fig. 797. Number of Cuts—One. Cut Data—60 r.p.m.; ⅝-in. feed.

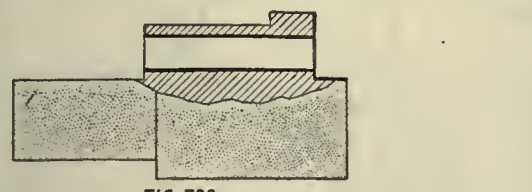

FIG. 788

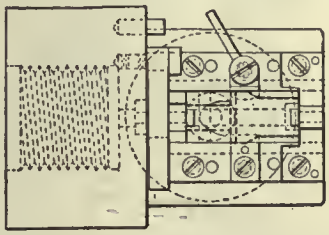

FIG. 789

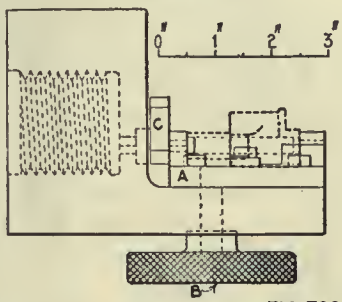

FIG. 790

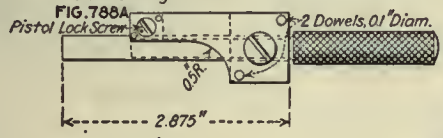

FIG. 788A

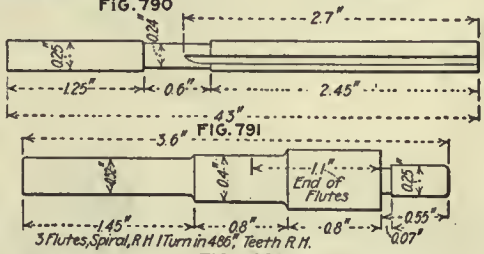

FIG. 791

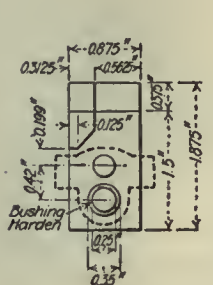

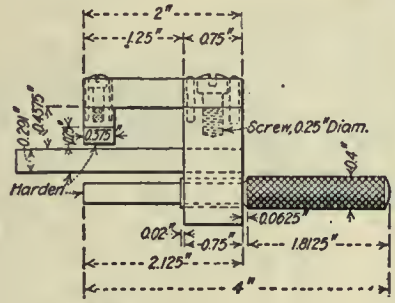

FIG. 793B

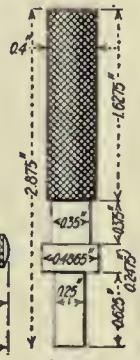

FIG. 793A

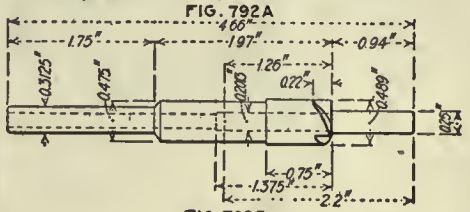

FIG. 792A

FIG. 792B

OPERATION 9

OPERATION 8. HAND-MILLING FOR SAFETY LOCK, ROUGH

Transformation—Fig. 784. Machine Used—Pratt & Whitney No. 2 hand miller. Number of Operators per Machine—One. Work-Holding Devices—On stud in A, mandrel B, the jaw carrying A being drawn in with cam C, the under side is located by stop D, Fig. 785; details in Fig. 786. Tool-Holding Devices—Taper shank, Fig. 787. Cutting Tools—One end mill. Number of Cuts—One. Cut Data—600 r.p.m.; hand feed. Coolant—Cutting oil, drop at a time. Average Life of Tool Between Grindings—500 pieces. Gages—Fig. 787; A, length of top of body. Production—350 per hr.

OPERATION 9. DRILLING, REAMING AND COUNTERBORING SAFETY-LOCK SPINDLE HOLE IN GANG DRILLER

Transformation—Fig. 788; machining diagram, Fig. 788-A. Machine Used—Pratt & Whitney 16-in. hand screw machine, Fig. 789. Number of Operators per Machine—One. Work-Holding Devices—In fixture on stud, Fig. 790; slide A carries a stud and is moved into the hole in sleeve by a cam operated by knurled handle B; lever C is dropped behind the slide A and locks it in place. Tool-Holding Devices—Holes in turret. Cutting Tools—Drill, counterbore and bottoming tool, Fig. 791; A, reamer; B, counterbore shown in Figs. 792 A and B; C, counterbore for safety-lock seat; drill guided in bushing A, Fig. 789. Coolant—Cutting oil, put on with brush. Average Life of Tool Between Grindings—2,000 pieces. Gages—Fig. 798; A, relation of sides to bore; B, contour of sides and bore. Production—50 per hr. Note—Work-holding points, hole and side.

OPERATION 13. PROFILING OVER SAFETY-LOCK SPINDLE HOLE

Transformation—Fig. 799; machining diagram, Fig. 799-A. Machine Used—Pratt & Whitney No. 2 profiler. Number of Operators per Machine—One. Work-Holding Devices—In vise jaws at neck of sleeve, Fig. 800; details in Fig. 801; work is located on pins in holes. Tool-Holding Devices—Taper shank. Cutting Tools—End mill, Fig. 802. Cut Data—1,000 r.p.m.; hand feed. Coolant—Compound, two ¼-in. streams. Average Life of Tool Between Grindings—300 pieces. Gages—Fig. 803; sleeve slides on plug A and under side of sleeve seats against a stop behind sleeve; finger B drops over sleeve and rests on post C to show contour; the sleeve is then reversed, the finger slid along on bar D until it seats on post E and other side is gaged. Production—70 per hr.

OPERATION EE. REMOVING BURRS LEFT BY OPERATION 10

Number of Operators—One. Description of Operation—Removing burrs thrown up by operation 10. Apparatus and Equipment Used—File. Production—Grouped with operation 14.

FIG. 794

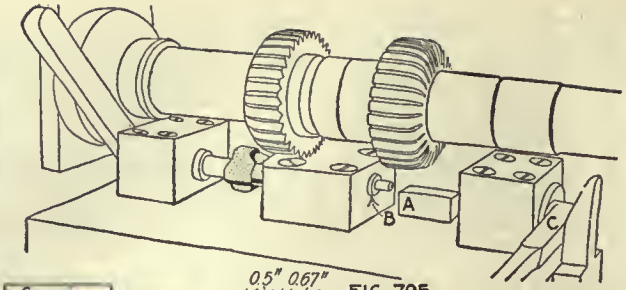

FIG. 795

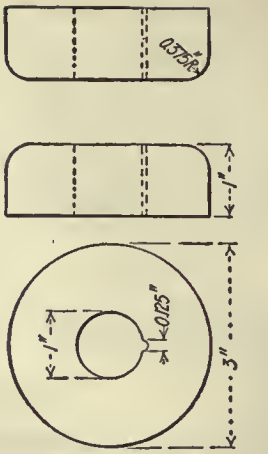

FIG. 797 30 Teeth, L.H.

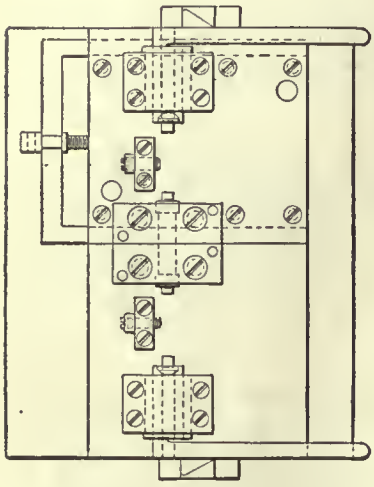

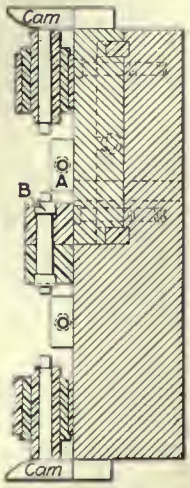

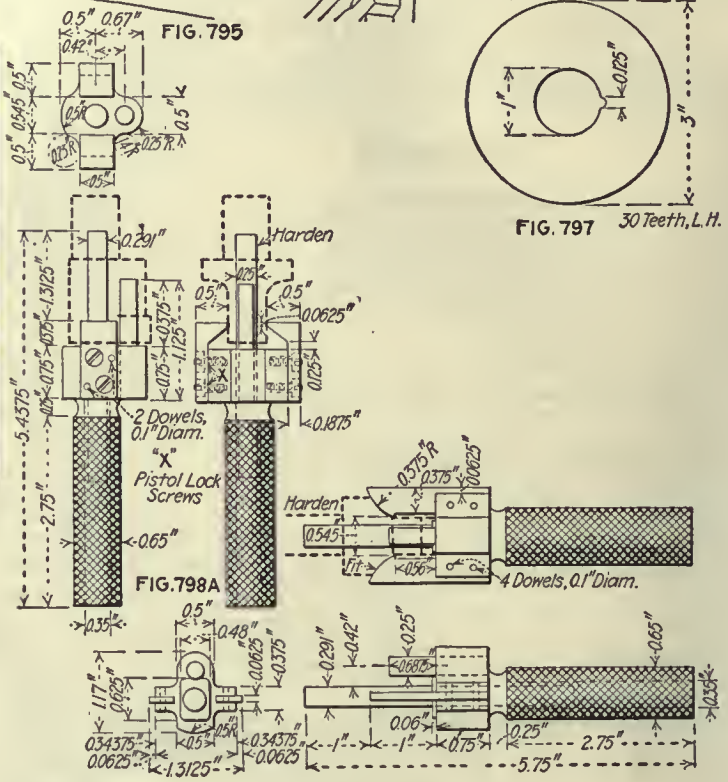

FIG. 798A

FIG. 798B

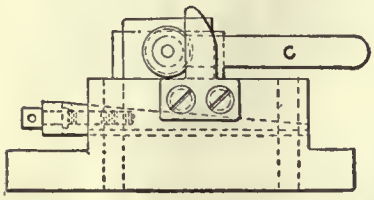

FIG. 796

OPERATION 10

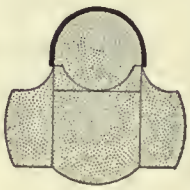

FIG. 799

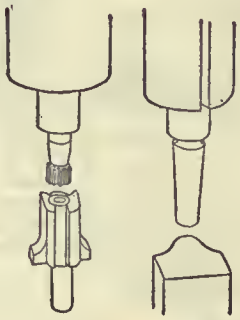

FIG. 799A

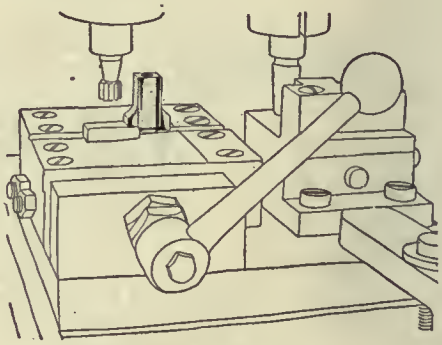

FIG. 800

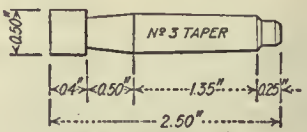

9 Teeth, R.H on Face Only

FIG. 802

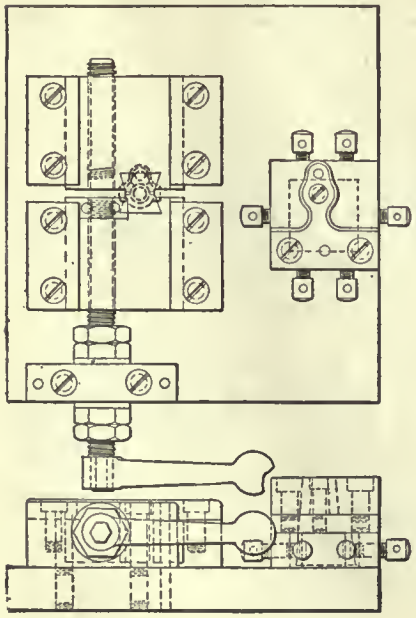

FIG. 801

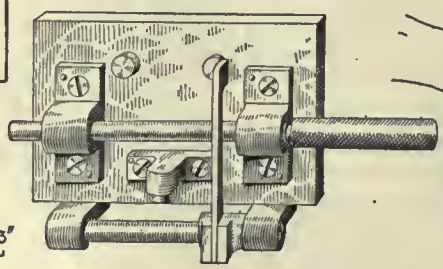

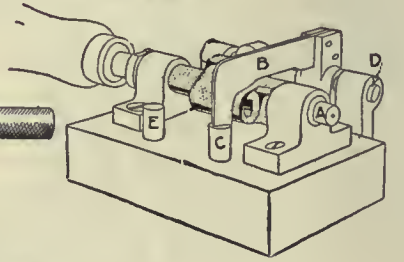

FIG. 803

OPERATION 13

FIG. 804

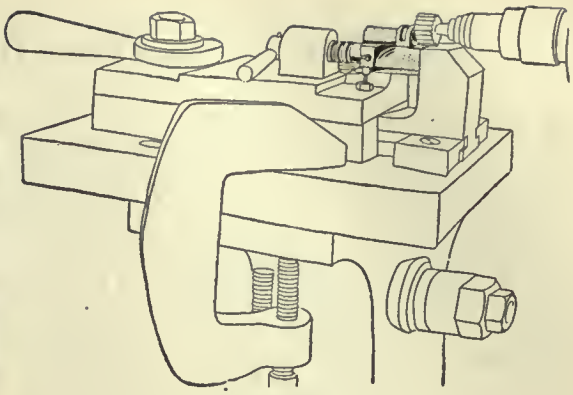

FIG. 805

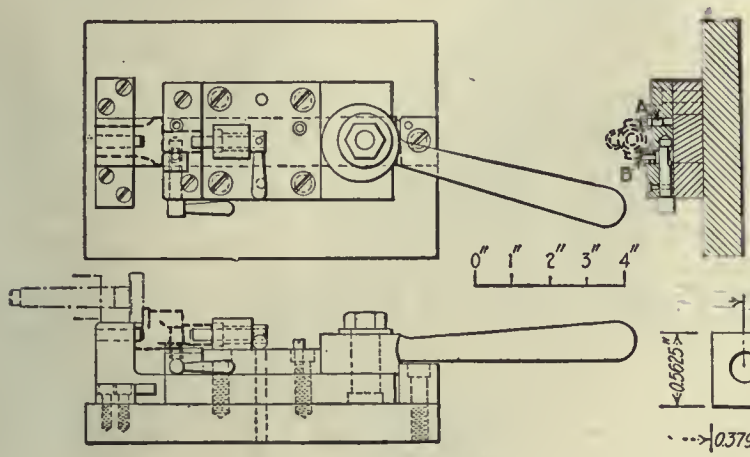

FIG. 806

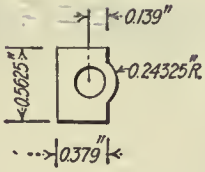

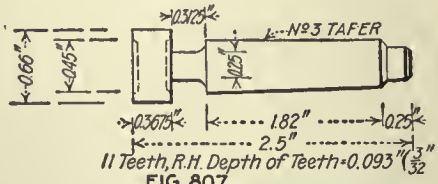

FIG. 807

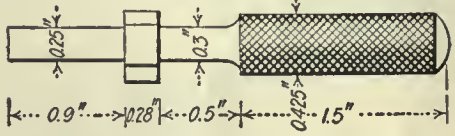

STEEL (Harden)

FIG. 808

OPERATION 14

OPERATION 14. HAND-MILLING SEAT FOR SAFETY LOCK

Transformation—Fig. 804. Machine Used—Pratt & Whitney No. 2 hand miller. Number of Operators per Machine—One. Work-Holding Devices—Held on pins, clamped at end by cam, Fig. 805; located by stop A under left side and held by spring pin B, Fig. 806. Tool-Holding Devices—Taper shank. Cutting Tools—End mill, Fig. 807. Number of Cuts—One. Cut Data—600 r.p.m.; hand feed. Coolant—Cutting oil, put on with brush. Average Life of Tool Between Grindings—2,500 pieces. Gages—Fig. 808, relation of seat to bore. Production—350 per hr. Note—The milling fixture is held to table by C clamp.

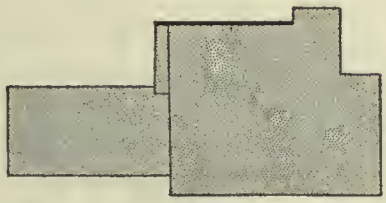

FIG. 809

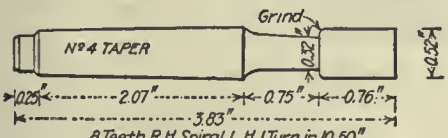

FIG. 811

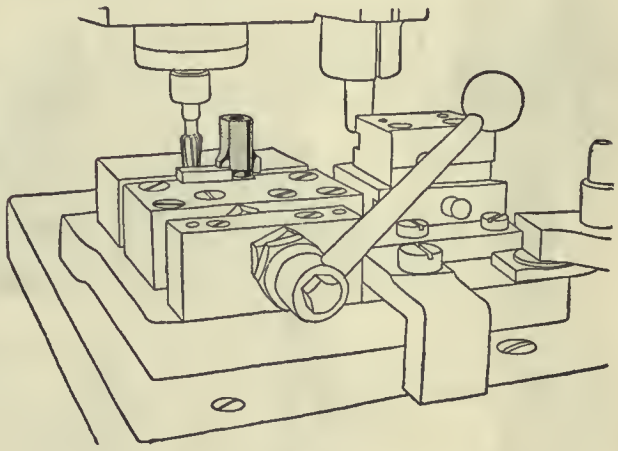

FIG. 810

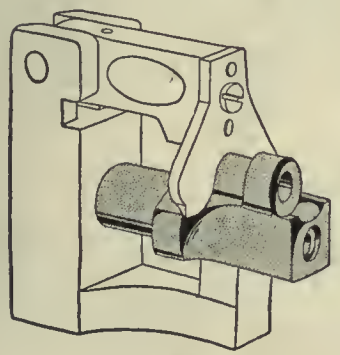

FIG. 812

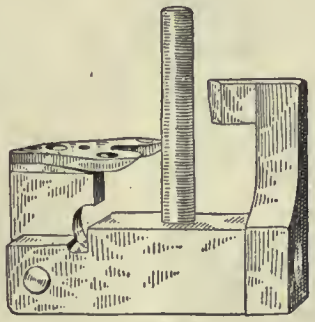

FIG. 812B

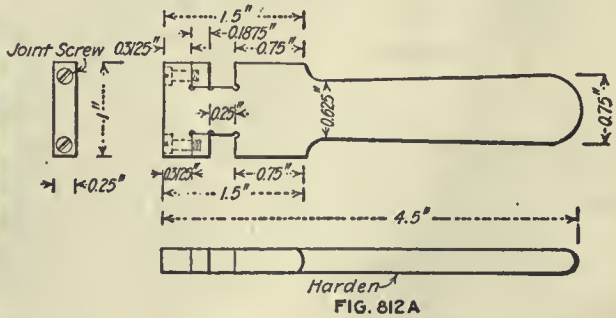

FIG. 812A

OPERATION 11

Operations on the Sleeve—(*Continued*)

While this artiele shows minor operations on the sleeve, they are by no means unimportant. The holes for holding the safety lock in any of its three positions and the holes for the sleeve loek are both given. These and other operations give a good idea of the various forms of fixtures and gages employed in this work. Rotating or oscillating fixtures for a kind of form or profile milling are also used, as shown in Fig. 818, for the safety-lock groove. The work is rotated around the milling eutter, the movement being controlled by stops.

Gaging is very important in this work, as the parts are small and location is important. An instance of this is shown in Fig. 816, while Fig. 816-A shows how to gage the loeation of eaeh of the three locking holes.

The final operations on the sleeve are somewhat interesting, especially to those not familiar with rifle making. They are small cuts in almost every case and might seem unimportant if we had not previously studied the piece in detail so as to know just what part they play in the functioning of the firing mechanism of the rifle, and while no new types of gages are employed the way in which they handle the work makes them of more than passing interest.

OPERATION 11. PROFILING OVER TOP OF LUGS AND SAFETY-LOCK SPINDLE HOLE

Transformation—Fig. 809; machining diagram, same as Fig. 799-A. Machine Used—Pratt & Whitney No. 2 profiler. Number of Operators per Machine—One. Work-Holding Devices—In vise jaws by neck, Fig. 810; for details see Fig. 801. Tool-Holding Devices—Taper shank. Cutting Tools—End mill, Fig. 811. Number of Cuts—One. Cut Data—1000 r.p.m.; hand feed. Coolant—Compound, two ¼-in. streams. Average Life of Tool Between Grindings—200 pieces. Gages—Fig. 812; A, length of safety-lock projection; B, contour from firing hole, an arm swings back to clear projection while sleeve is placed on gage. Production—40 per hr.

OPERATION 21. DRILLING THREE HOLES FOR SAFETY-LOCK PLUNGER

Transformation—Fig. 813. Machine Used—Sigourney Tool Co. 12-in. three-spindle upright drilling machine. Number of Operators per Machine—One. Work-Holding Devices—Drill jig, Fig. 814; details in Fig. 815. Tool-Holding Devices—Drill chuck. Cutting Tools—Twist drill. Cut Data—600 r.p.m.; hand feed. Coolant—Cutting oil, ⅛-in. stream. Average Life of Tool Between Grindings—350 pieces. Gages—Fig. 816; sleeve is placed on plug A and pin gages used in bushings B, C and D. Production—40 per hr.

OPERATION 22. HAND-MILLING GROOVE FOR SAFETY-LOCK PLUNGER

Transformation—Fig. 817. Machine Used—Garvin No. 3. Number of Operators per Machine—One. Work-Holding Devices—Clamped on stud, Fig. 818; details in Fig. 819; sleeve is located and held on studs A and B, supported by C and clamped by finger D, fixture is rotated by lever E. Tool-Holding Devices—Taper shank. Cutting Tools—Milling cutter, Fig. 820. Number of Cuts—One. Cut Data—600 r.p.m.; hand feed. Coolant—Cutting oil. Average Life of Tool Between Grindings—500 pieces. Gages—Fig. 821; plug A fits firing-pin hole; pin B goes through arm C and gages depth of groove. Production—175 per hr. Note—Work-holding points, hole and bottom.

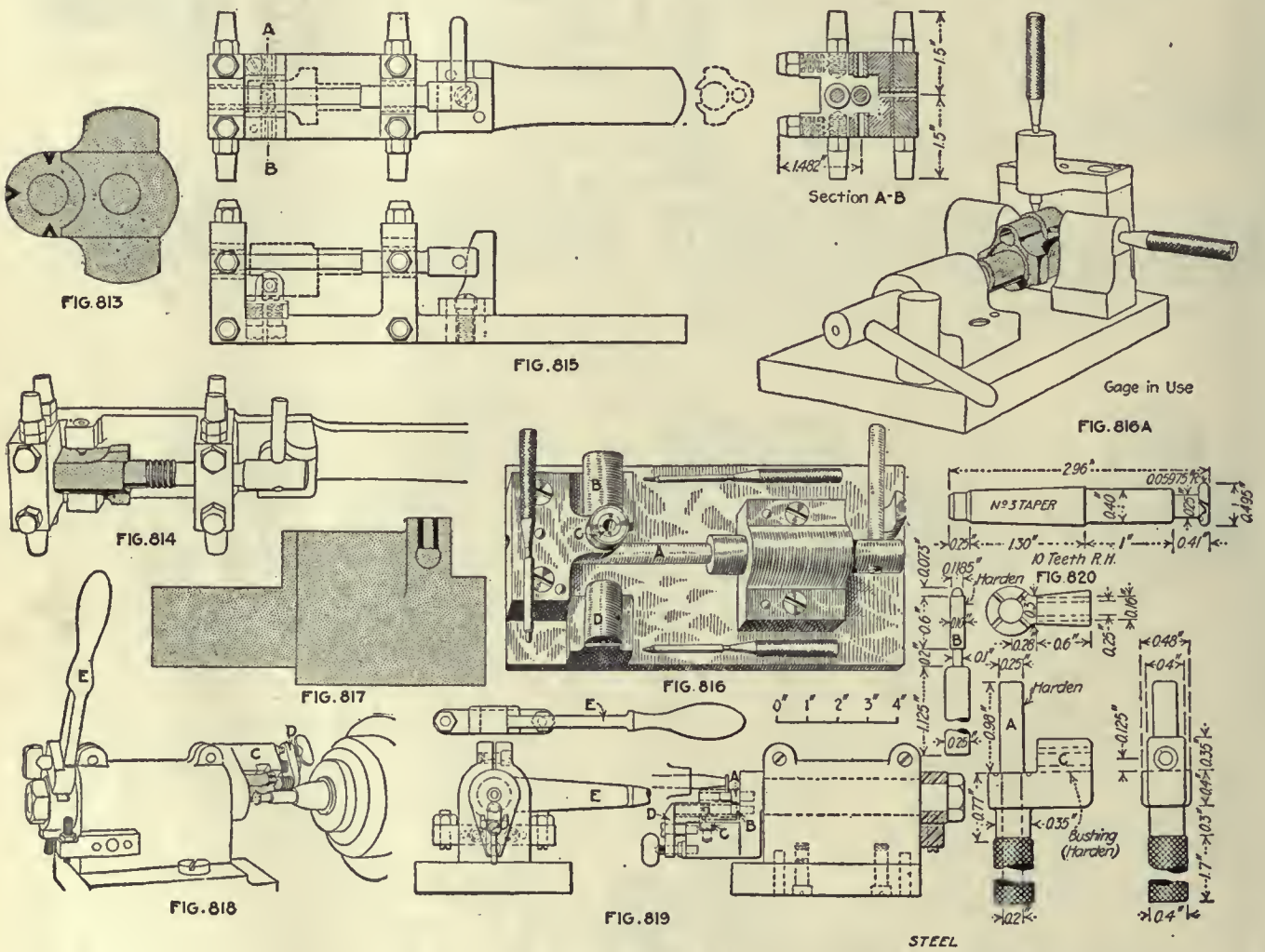

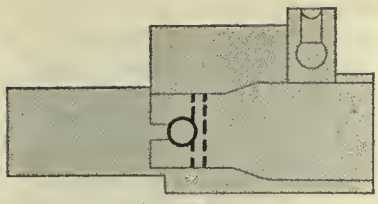

FIG. 822

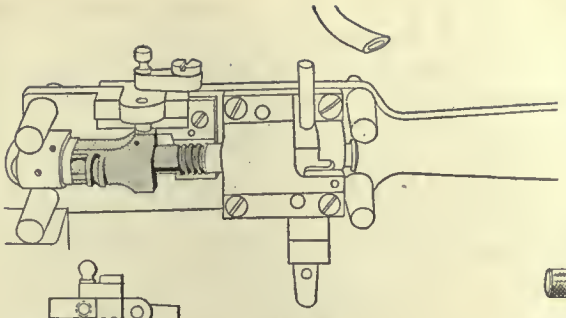

FIG. 823

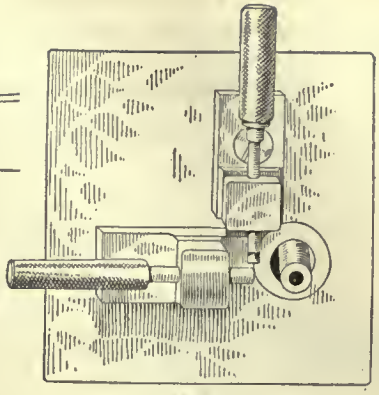

FIG. 826 D

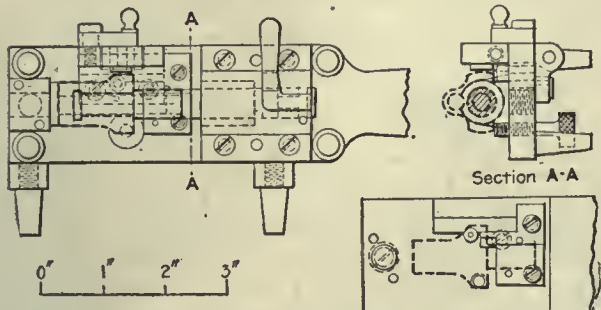

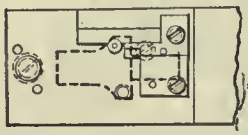

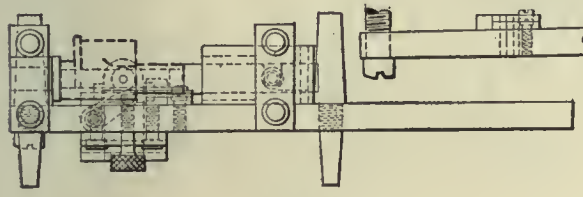

FIG. 824

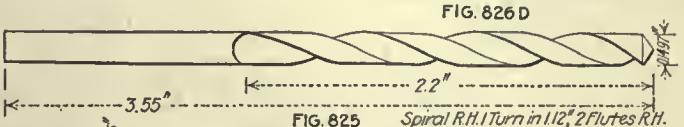

FIG. 825 Spiral R.H. 1 Turn in 1.12", 2 Flutes R.H.

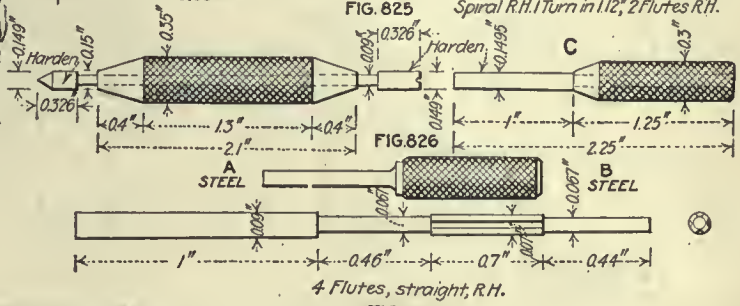

FIG. 826

4 Flutes, straight, R.H.

FIG. 827

OPERATION 15

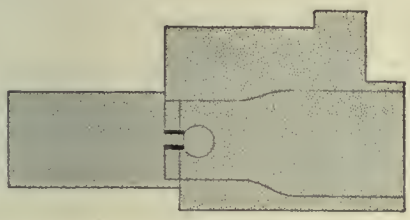

FIG. 828

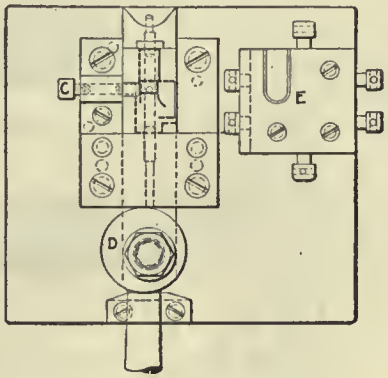

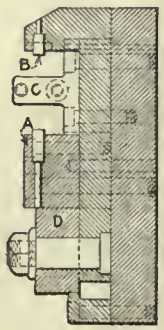

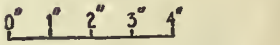

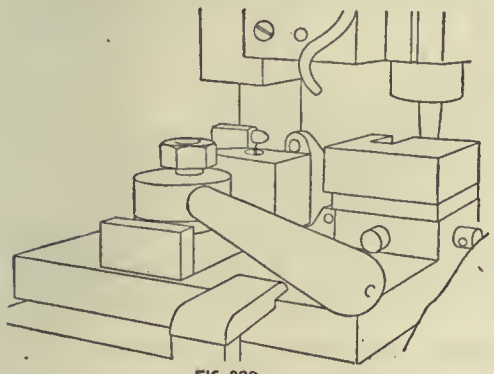

FIG. 829

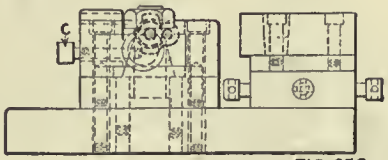

FIG. 830

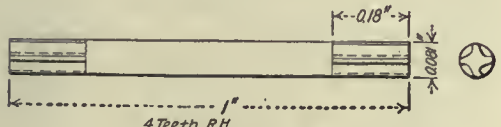

4 Teeth, R.H.

FIG. 831

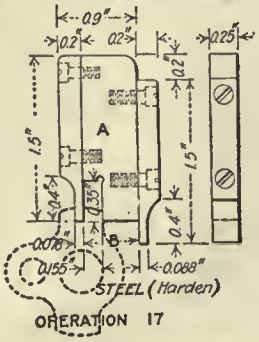

OPERATION 17

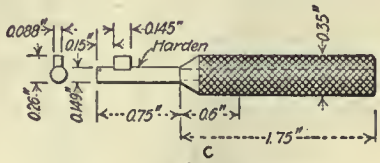

FIG. 832

Threading the sleeve is somewhat similar to the same operation on the barrel except that the lead of the screw must start from a given point so as to tally with the thread in the lock end of the bolt, while the barrel, being round and threaded first, is the basis to which the receiver must be threaded. The sleeve is held on centers but located from the back end so as to start the thread correctly. A special machine is used for threading, this being a sort of Fox lathe with the hob and leader conveniently arranged as can be seen from the different views in Fig. 836. Two circular cutting tools are used, one for use on the old and the other on the later machine, one of which went to the Rock Island arsenal. A segmental leader is used; the hob is on the lathe spindle, while the tool cuts from above. The gage, Fig. 838, is almost identical with that for the thread on the rifle barrel.

Several operations prepare the sleeve for the cocking piece, this sliding in the sleeve and being guided by it.

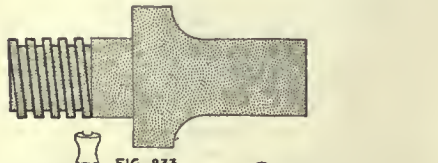

FIG. 833

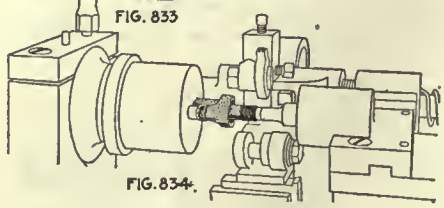

FIG. 834

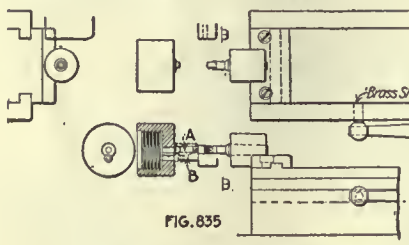

FIG. 835

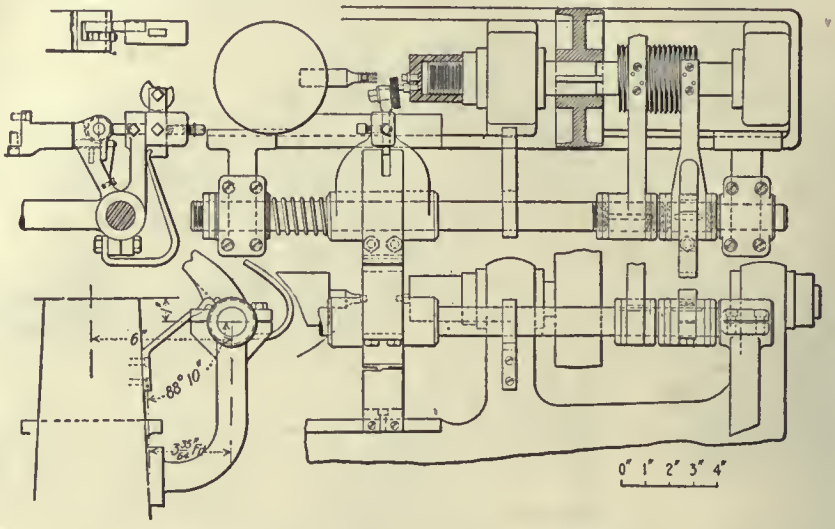

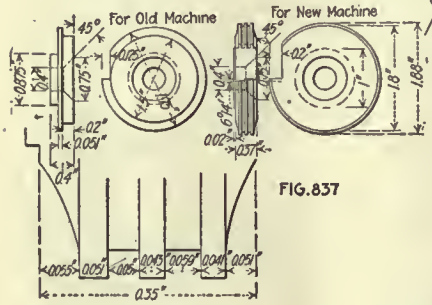

FIG. 837

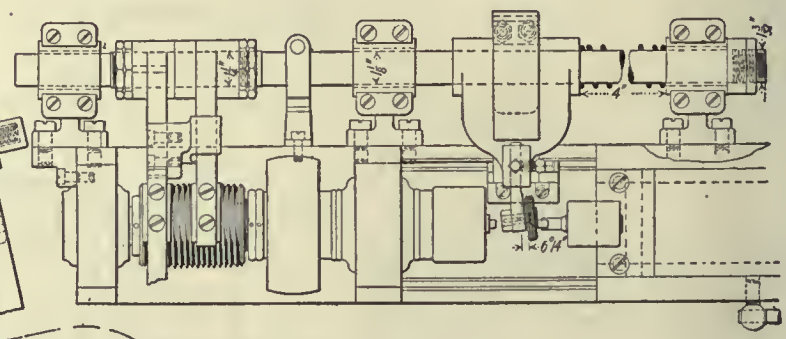

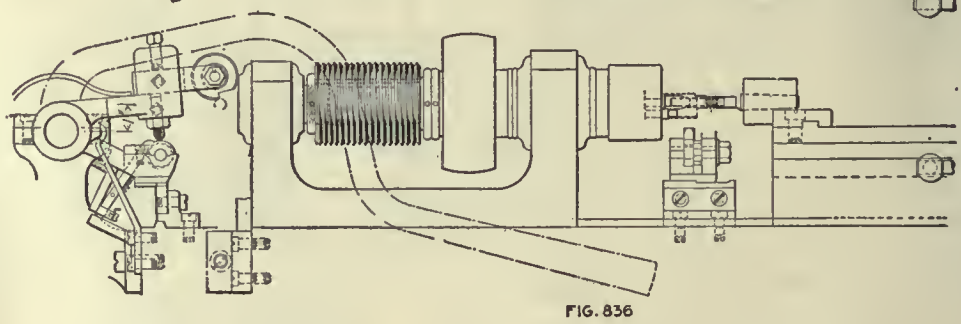

FIG. 836

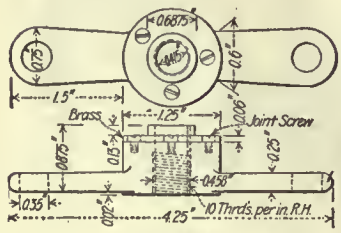

FIG. 838

OPERATION 18

OPERATION 15. DRILLING SLEEVE-LOCK AND PIN HOLES

Transformation—Fig. 822. Machine Used—Pratt & Whitney 14-in. three-spindle upright drilling machine. Number of Operators per Machine—One. Work-Holding Devices—Drill jig, Fig. 823; details in Fig. 824; held on studs, and fixture has two positions, 90 deg. apart. Tool-Holding Devices—Drill chuck. Cutting Tools—Two drills and a bottoming tool, Fig. 825. Number of Cuts—Three. Cut Data—600 r.p.m.; hand feed. Coolant—Cutting oil, $\frac{1}{8}$-in. stream. Average Life of Tool Between Grindings—300 pieces. Gages—Fig. 826; A, diameter and depth of sleeve-lock hole; B, not-go gage; C, pin hole; D, location of holes. Production—40 per hr.

OPERATION GG. BURRING SLEEVE-LOCK PIN HOLE

Number of Operators—One. Description of Operation—Removing burrs from pin hole. Apparatus and Equipment Used—File and small reamer, Fig. 827. Production—300 per hr.

OPERATION 17. PROFILING FOR SLEEVE-LOCK LATCH

Transformation—Fig. 828. Machine Used—Pratt & Whitney No. 1 profiler. Number of Operators per Machine—One. Work-Holding Devices—On studs, clamped at ends, Fig. 829; details in Fig. 830; held on studs A and B, located against stops C, clamped by cam D; profiling form at E. Tool-Holding Devices—Taper shank. Cutting Tools—End mill, Fig. 831. Number of Cuts—One. Cut Data—1200 r.p.m.; hand feed. Coolant—Cutting oil, $\frac{1}{8}$-in. stream. Average Life of Tool Between Grindings—500 pieces. Gages—Fig. 832; A, location of slot from sides; B, width of slot; C, relation of slot to hole. Production—40 per hr.

OPERATION HH. REMOVING BURRS LEFT BY OPERATION 17

Number of Operators—One. Description of Operation—Removing burrs thrown up by operation 17. Apparatus and Equipment Used—File. Production—250 per hr.

OPERATION 18. THREADING BARREL OF SLEEVE

Transformation—Fig. 833. Machine Used—Special Fox lathe made at Hill shops. Number of Operators per Machine—One. Work-Holding Devices—Held on center, Fig. 834; details in Fig. 835; sleeve fits on stud A and is driven by stud B in safety-lock hole; this also locates sleeve so as to start thread in correct position for bolt; details of machine in Fig. 836. Tool-Holding Devices—In holder. Cutting Tools—Fig. 837, circular thread tool, ratchet feed, see Fig. 836. Number of Cuts—Five. Coolant—Cutting oil, put on with brush. Average Life of Tool Between Grindings—150 pieces. Gages—Fig. 838, size and location of threads. Production—40 per hr.

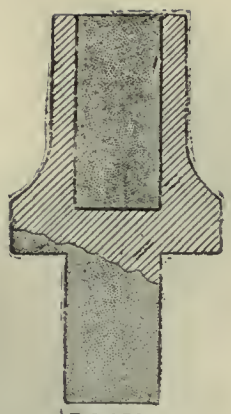

FIG. 839

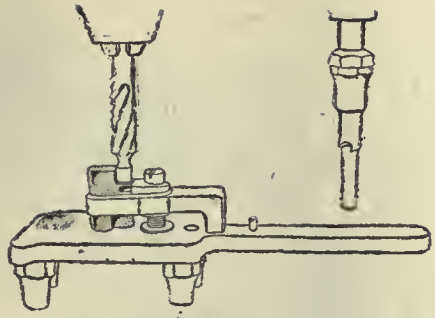

FIG. 840

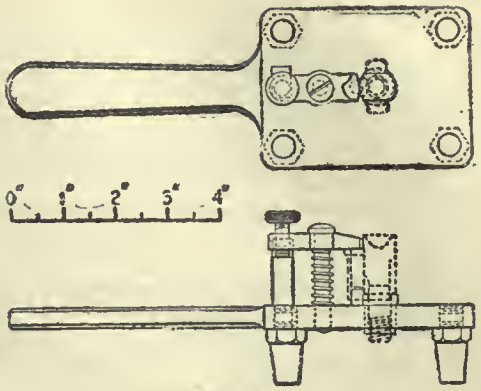

FIG. 841

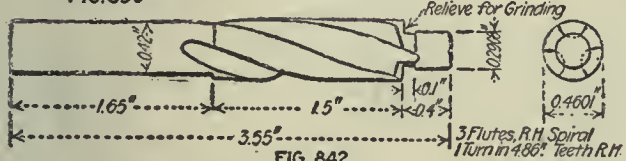

FIG. 842

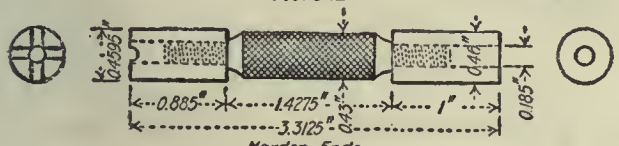

FIG. 843A

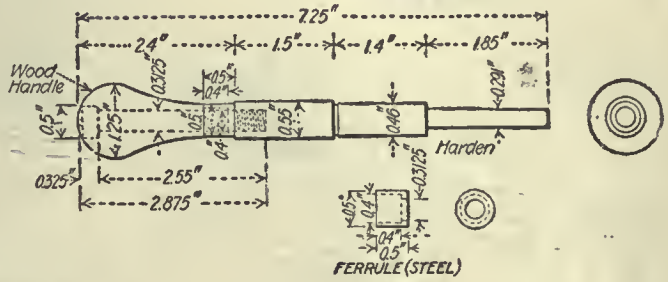

FIG. 843B

OPERATION 19

OPERATION 19. COUNTERBORING COCKING-PIECE SEAT

Transformation—Fig. 839. Machine Used—Ames 16-in. vertical drilling machine. Number of Operators per Machine—One. Work-Holding Devices—Drill jig, Fig. 840; details of another type in Fig. 841. Tool-Holding Devices—Drill chuck. Cutting Tools—Counterbore, Fig. 842. Cut Data—150 r.p.m.; hand feed. Coolant—Cutting oil, ⅛-in. stream. Average Life of Tool Between Grindings—250 pieces. Gages—Fig. 843; A, diameter and depth gage; B, concentricity of holes and counterbore. Production—40 per hr.

OPERATION 20. MILLING COCKING-PIECE SLOT

Transformation—Fig. 844. Machine Used—Pratt & Whitney No. 2 Lincoln miller. Number of Operators per Machine—One. Work-Holding Devices—On studs clamped at ends, Fig. 845; details in Fig. 846, which shows two cams instead of one, as now used. Tool-Holding Devices—Standard arbor. Cutting Tools—Two radius cutters, Fig. 847. Number of Cuts—One. Cut Data—60 r.p.m.; 5/8-in. feed. Coolant—Compound, two ⅛-in. streams. Average Life of Tool Between Grindings—2,000 pieces. Gages—Fig. 848. Production—50 per hr. Note—Work-holding points, hole and side.

OPERATION II. REMOVING BURRS LEFT BY OPERATION 20

Number of Operators—One. Description of Operation—Removing burrs from cocking-piece slot. Apparatus and Equipment Used—File and reamer, Fig. 849. Production—Grouped with operation 20.

OPERATION JJ. REMOVING BURRS FROM FIRING-PIN HOLE

Number of Operators—One. Description of Operation—Removing burrs thrown up by operation 20. Apparatus and Equipment Used—File and reamer. Production—Grouped with operation 20.

OPERATION 23. MILLING MATCHING GROOVE RECESSES FOR SAFETY-LOCK PLUNGER

Transformation—Fig. 850. Machine Used—Sigourney Tool Co. four-spindle upright drilling machine. Number of Operators per Machine—One. Work-Holding Devices—Drill jig, Figs. 851 and 852. Tool-Holding Devices—Drill chuck. Cutting Tools—Fig. 853. Number of Cuts—Two. Cut Data—600 r.p.m.; hand feed. Coolant—Cutting oil. Average Life of Tool Between Grindings—600 pieces. Production—30 per hr.

OPERATION 24. FILING EDGES OF COCKING-PIECE SLOT AND SAFETY-LOCK THUMB-PIECE BEARING

Number of Operators—One. Description of Operation—General filing, cornering and brushing up. Apparatus and Equipment Used—File. Production—100 per hr.

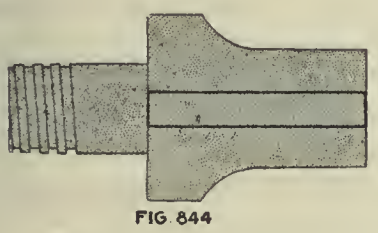

FIG. 844

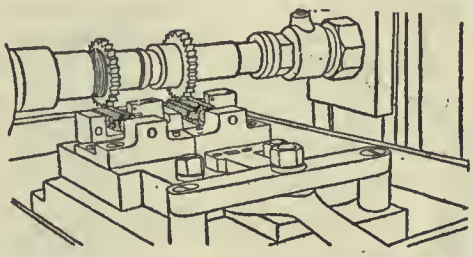

FIG. 845

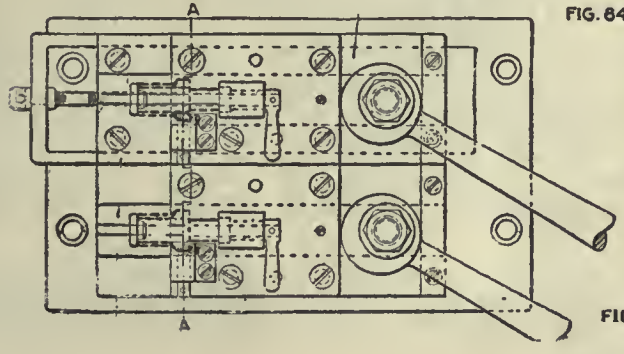

FIG. 846

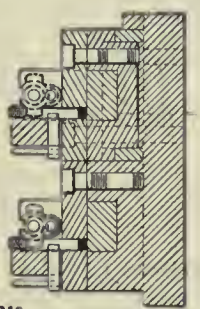

Section AA

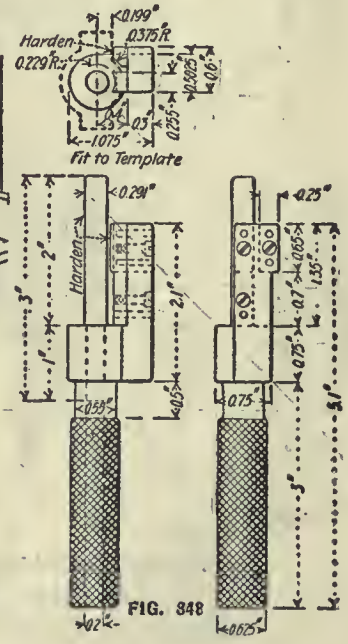

FIG. 848

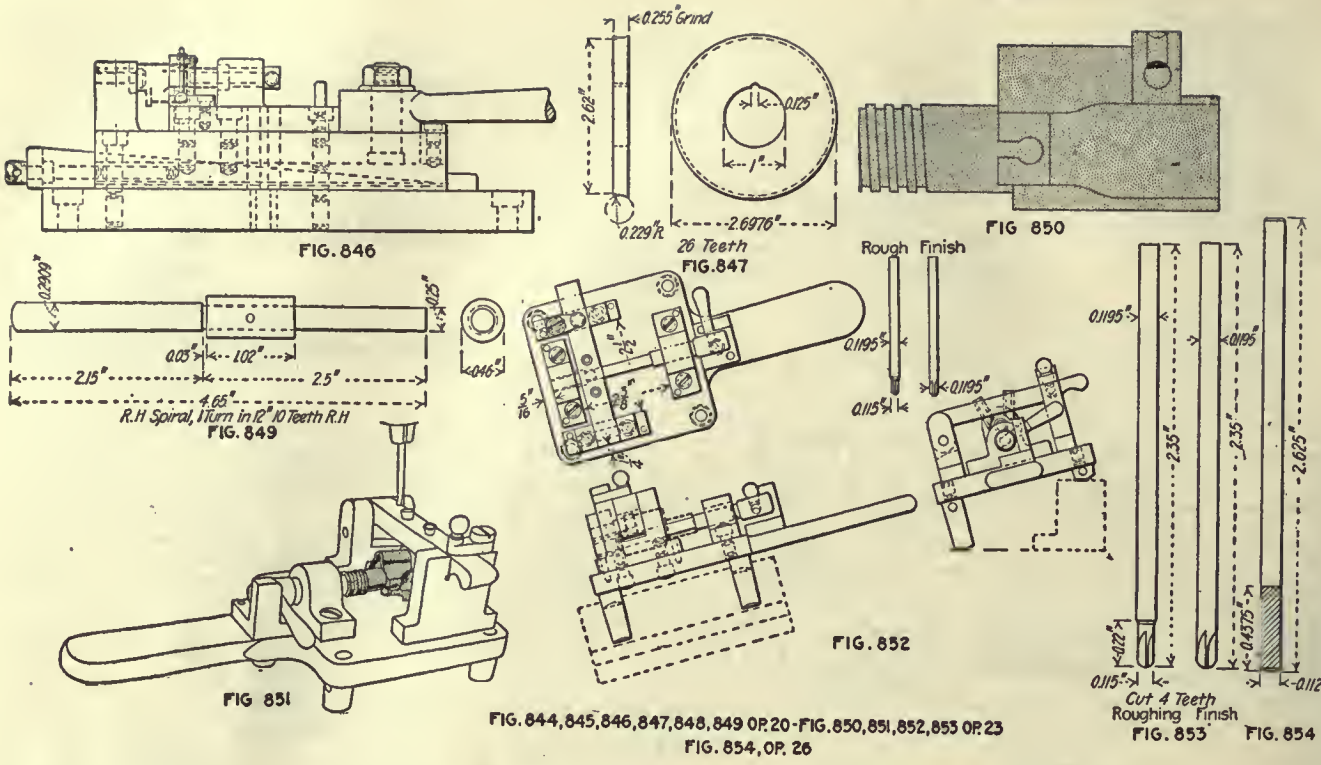

FIG. 844, 845, 846, 847, 848, 849 OP. 20 - FIG. 850, 851, 852, 853 OP. 23
FIG. 854, OP. 26

OPERATION 25. REAMING HOLE FOR SLEEVE LOCK, BURRING SAFETY-LOCK SPINDLE HOLE AND COUNTERSINKING SLEEVE-LOCK PIN HOLE, ETC.

Machine Used—Prentice 14-in. speed lathe. Number of Operators per Machine—One. Work-Holding Devices—Work held in hand. Tool-Holding Devices—Drill chuck. Cutting Tools—Burring reamer. Number of Cuts—One. Cut Data—About 250 r.p.m. Coolant—Cutting oil, put on with brush. Average Life of Tool Between Grindings—1,500 pieces. Production—400 per hr.

OPERATION 27. POLISHING EXTERIOR SURFACES

Number of Operators—One. Description of Operation—Polishing all outside surfaces. Apparatus and Equipment Used—Polishing jack and wheel. Production—25 per hr.

OPERATION 26. ROTARY FILING MATCHING SAFETY-LOCK PLUNGER RECESSES WITH PLUNGER GROOVE

Number of Operators—One. Description of Operation—Rotary filing lock-spindle recess to match with spindle groove. Apparatus and Equipment Used—Rotary file, Fig. 854. Production—120 per hr.

OPERATION 28. FILING, GENERAL CORNERING

Number of Operators—One. Description of Operation—Cornering and general brushing up. Apparatus and Equipment Used—File. Production—25 per hr.

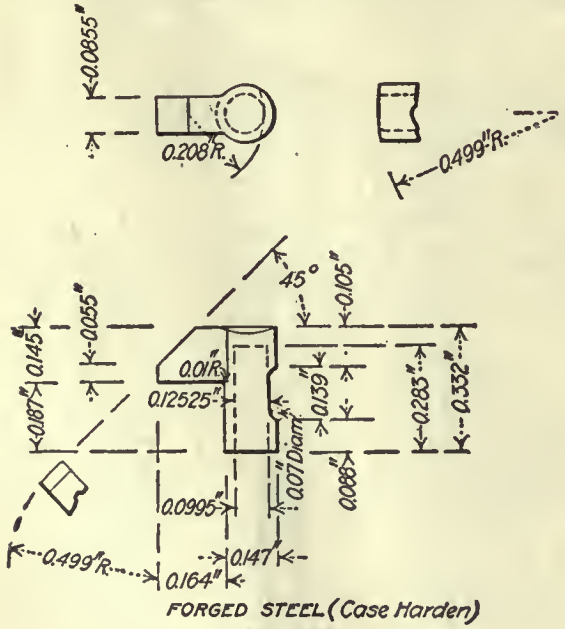

FIG. 855

DETAILS OF SLEEVE LOCK

OPERATION 29. CASEHARDENING

Number of Operators—One. Description of Operation—Packed in whole, new bone; heated to 750 deg. C. (1,382 deg. F.) for 2½ hr.; quenched in oil. Apparatus and Equipment Used—Same apparatus as for the receiver and bolt.

OPERATION 30. ASSEMBLING WITH SLEEVE, LOCK PIN AND SPRING, AND SAFETY LOCK

Number of Operators—One. Description of Operation—Assembling safety lock and spring with sleeve. Production—50 per hr.

The Sleeve Lock

The sleeve lock is a small piece in the form of a hook that fits in the left side of the sleeve and locks it to the bolt in the proper position. It is a drop forging of Class D steel, which comes in bars 0.26 in. square. It is annealed and otherwise heat-treated in the same manner as the sleeve itself, so far as the heat-treatment is concerned. It is designed to prevent the accidental turning of the sleeve when the bolt is pulled back.

As will be seen from the detail drawings, Fig. 855, it is a small piece and is on this account handled in multiple fixtures wherever possible. There are but few operations that require detailed illustrations.

OPERATIONS ON THE SLEEVE LOCK

Operation	
A	Cutting off
A-1	Forging from bar
C	Annealing
D	Pickling
B	Trimming
2	Milling top of lug, roughing
1	Drilling, reaming and hollow-milling body, facing right side of lug
3-4	Milling sides of lug and over body
5	Hand-milling, rounding top to match sleeve
7	Hand-milling, rounding bevel front end
AA	Reaming pin hole
8	Hand-milling clearance for pin
9	Filing general cornering and matching
10	Casehardening

OPERATION A. CUTTING OFF

Number of Operators—One. Description of Operation—The bars come too long to work easily, so are cut in two. Apparatus and Equipment Used—A pair of alligator shears.

OPERATION A-1. FORGING FROM BAR

Transformation—Fig. 856. Number of Operators—One. Description of Operation—Blocking from bar. Apparatus and Equipment Used—Billings & Spencer 400-lb. drop hammer. Production—400 per hr.

OPERATION C. ANNEALING

Number of Operators—One. Description of Operation—Pieces are packed in powdered charcoal placed in iron pots; left in furnace over night to cool. Apparatus and Equipment Used—Powdered charcoal, iron pots, Brown & Sharpe annealing furnaces.

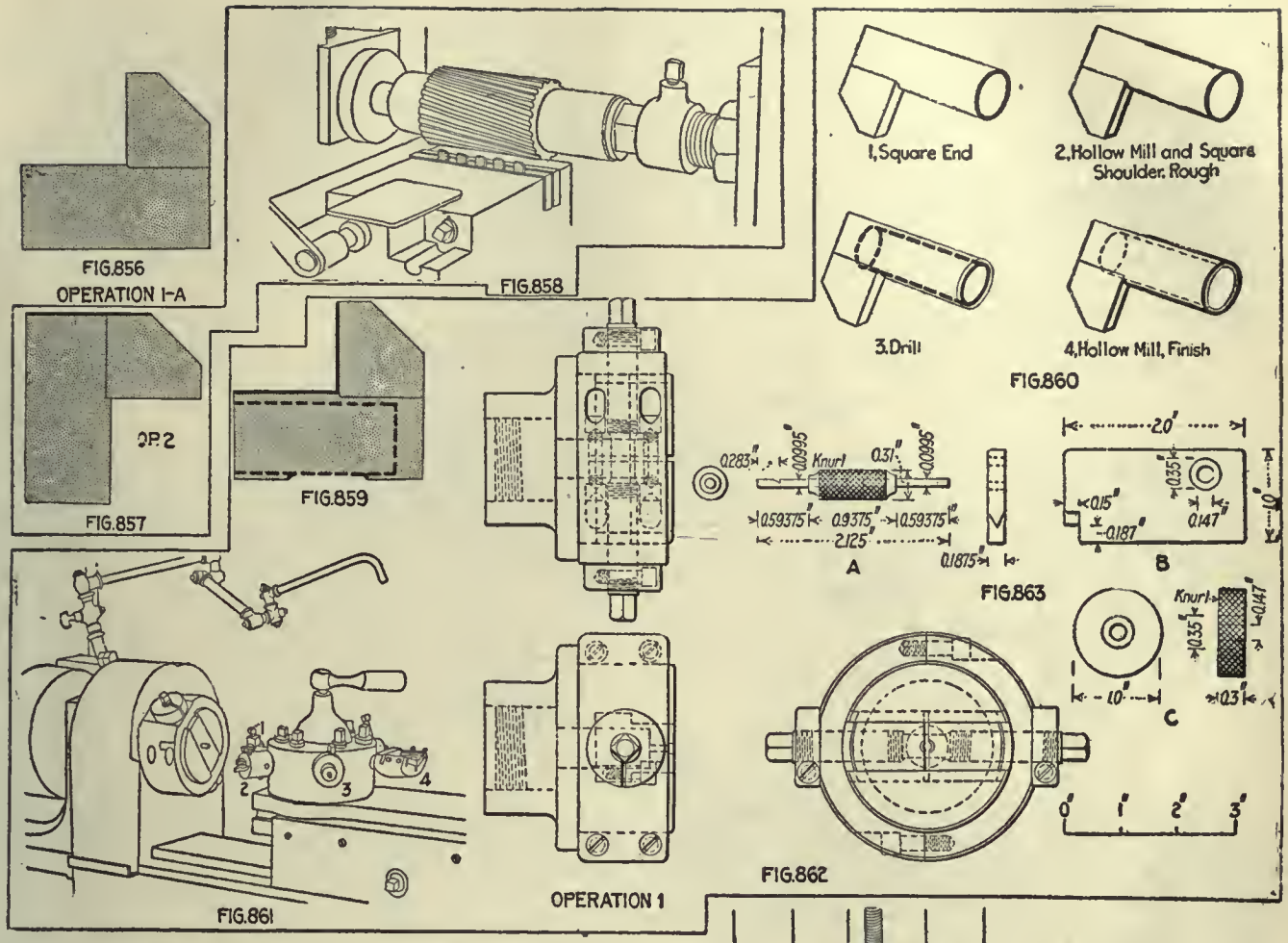

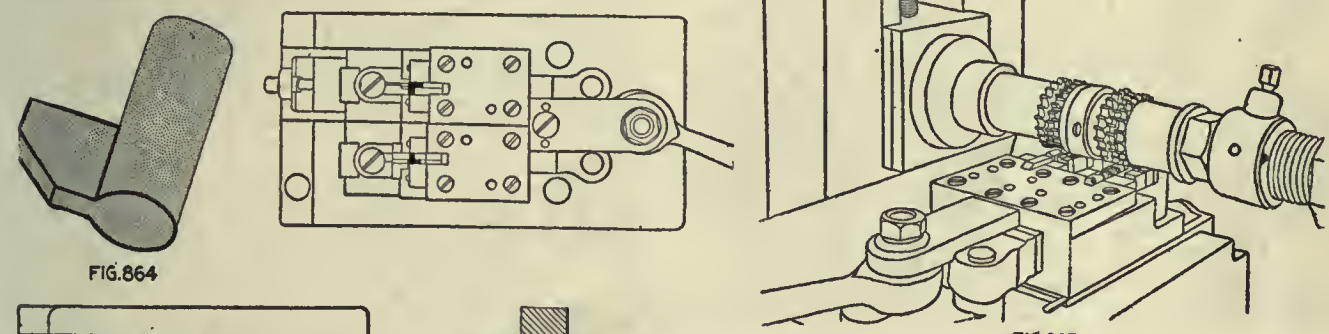

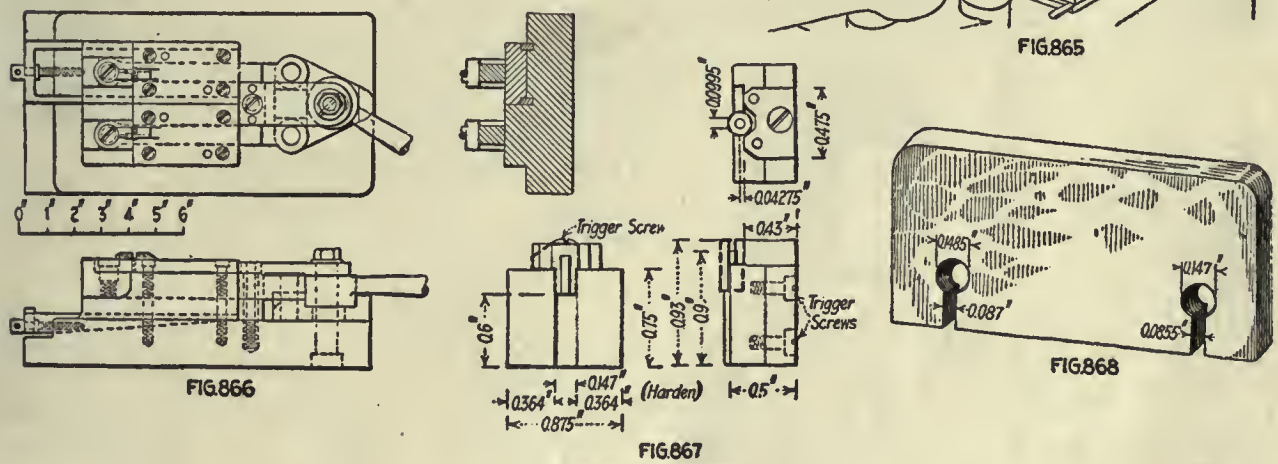

OPERATION D. PICKLING

Number of Operators—One. Description of Operation—Placed in wire baskets, put into the pickling solution previously described, and left there for about 12 min. Apparatus and Equipment Used—Wire basket, wooden tanks, hoist.

OPERATION B. TRIMMING

Machine Used—Perkins & Snow power press No. 2, 3-in. stroke. Number of Operators per Machine—One. Punches and Punch Holders—Square-shank punch holder. Die, and Die Holders—In shoe by setscrews. Production—600 per hr.

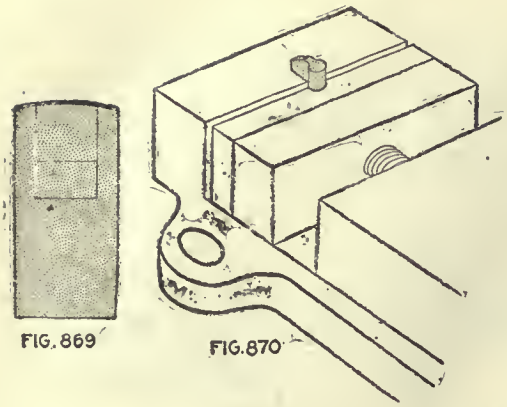

FIG. 869

FIG. 870

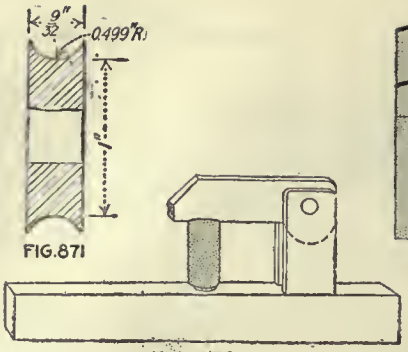

FIG. 871

FIG. 872

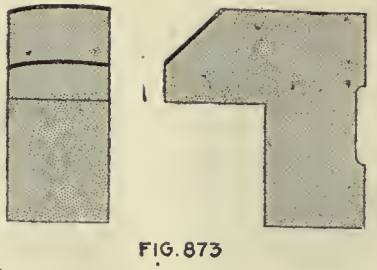

FIG. 873

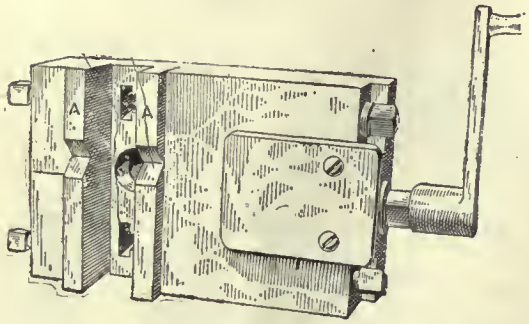

FIG. 874

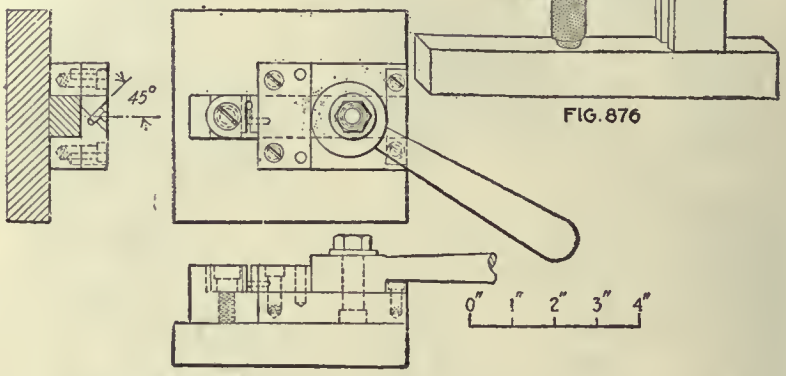

FIG. 875

FIG. 876

OPERATION 5 & 7

OPERATION 2. MILLING TOP, ROUGHING

Transformation—Fig. 857. Machine Used—Pratt & Whitney No. 2 Lincoln miller. Number of Operators per Machine—One. Work-Holding Devices—Multiple vise; five are clamped by stem at each setting, Fig. 858. Tool-Holding Devices—Standard arbor. Cutting Tools—Wide-face milling cutter. Number of Cuts—One. Cut Data—Speed, 70 r.p.m.; ⅝-in. feed. Coolant—Cutting oil, put on with brush. Average Life of Tool Between Grindings—8,000 pieces. Production—45 per hr.

OPERATION 1. DRILLING, REAMING AND HOLLOW-MILLING BODY, FACING RIGHT SIDE OF LUG

Transformation—Fig. 859. Machine Used—Pratt & Whitney No. 1 hand screw machine; machining diagram, Fig. 860. Number of Operators per Machine—One. Work-Holding Devices—Two formed chuck jaws, Fig. 861; details in Fig. 862. Tool-Holding Devices—Turret of machine. Cutting Tools—Spotting drill, hollow mill, box tool and reamer. Number of Cuts—Five. Cut Data—Speed, 900 r.p.m.; hand feed. Coolant—Cutting oil, ⅛-in. stream. Average Life of Tool Between Grindings—350 pieces. Gages—Fig. 863; A, diameter and depth of hole; B, thickness of head; C, outside diameter of stem. Production—60 per hr.

OPERATIONS 3 AND 4. MILLING SIDES OF LUG

Transformation—Fig. 864. Machine Used—Pratt & Whitney No. 2 Lincoln miller. Number of Operators per Machine—One. Work-Holding Devices—Formed vise jaws, Fig. 865; details in Fig. 866. Tool-Holding Devices—Standard arbor. Cutting Tools—Formed milling cutters. Number of Cuts—One. Cut Data—700 r.p.m.; ⅝-in. feed. Coolant—Cutting oil, put on with brush. Average Life of Tool Between Grindings—15,000 pieces. Gages—Fig. 867, sides of lug with hole in body; Fig. 868, limit gage for body and lug.

OPERATION 5. HAND-MILLING, ROUNDING TOP TO MATCHING SLEEVE

Transformation—Fig. 869. Machine Used—Garvin No. 3 hand miller. Number of Operators per Machine—One. Work-Holding Devices—Standard Vise with jaws formed to hold shank, Fig. 870. Tool-Holding Devices—Taper shank. Cutting Tools—Formed milling cutter, Fig. 871. Number of Cuts—One. Cut Data—900 r.p.m.; hand feed. Coolant—Cutting oil, put on with brush. Average Life of Tool Between Grindings—5,000 pieces. Gages—See Fig. 872. Production—175 per hr.

OPERATION 7. HAND-MILLING, ROUNDING BEVEL FRONT END

Transformation—Fig. 873. Machine Used—Garvin No. 3 hand miller. Number of Operators per Machine—One. Work-Holding Devices—Vise with formed jaws, Fig. 874, or with cam, as in Fig. 875; work held in grooves AA, to get bevel at proper angle. Tool-Holding Devices—Taper shank. Cutting Tools—Fig. 871. Number of Cuts—One. Cut Data—900 r.p.m.; hand feed. Coolant—Cutting oil, put on with brush. Average Life of Tool Between Grindings—5,000 pieces. Gages—Fig. 876, form and height gages for operations 2, 5 and 7. Production—350 per hr.

FIG. 878

FIG. 877, OP. AA

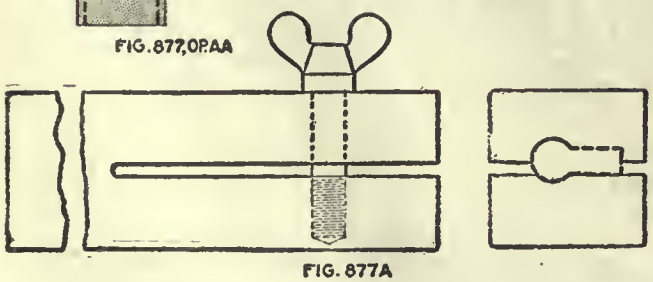

FIG. 877A

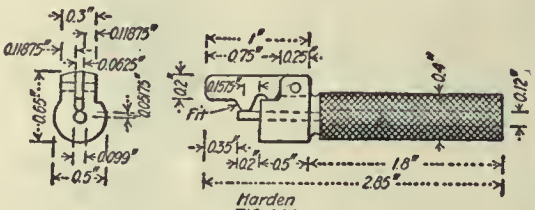

FIG. 880

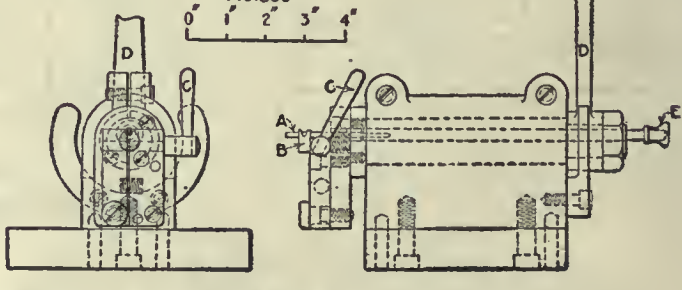

FIG. 879

OPERATION 8

OPERATION AA. REAMING PIN HOLE

Transformation—Fig. 877. Machine Used—Speed lathe. Number of Operators per Machine—One. Work-Holding Devices—In holder, Fig. 877-A. Tool-Holding Devices—Drill chuck. Cutting Tools—Reamers. Average Life of Tool Between Grindings—3,000 pieces. Production—350 per hr.

OPERATION 8. HAND-MILLING CLEARANCE FOR PIN

Transformation—Fig. 878. Machine Used—Garvin No. 3 hand miller. Number of Operators per Machine—One. Work-Holding Devices—Held on pin A in rotating fixture, Fig. 879; clamped between jaws B by lever C; rocked by handle D and removed by ejecting rod E. Tool-Holding Devices—Taper shank. Cutting Tools—Formed cutter. Number of Cuts—One. Cut Data—Speed, 900 r.p.m.; hand feed. Coolant—Cutting oil, put on with brush. Average Life of Tool Between Grindings—5,000 pieces. Gages—Fig. 880, lock is slipped on pin and finger drops on the milled spot. Production—350 per hr.

OPERATION 9. FILING, GENERAL CORNERING AND MATCHING

Number of Operators—One. Description of Operation—General filing, cornering and brushing up. Apparatus and Equipment Used—File. Production—50 per hr.

OPERATION 10. CASEHARDENING

Number of Operators—One. Description of Operation—Heated in cyanide to 1,500 deg. F., quenched in oil. Apparatus and Equipment Used—Crucible in oil furnace.

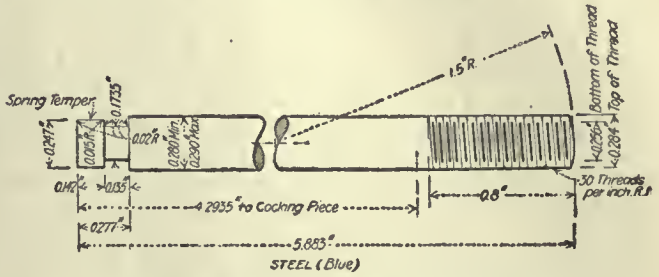

FIG. 881. DETAILS OF FIRING-PIN ROD

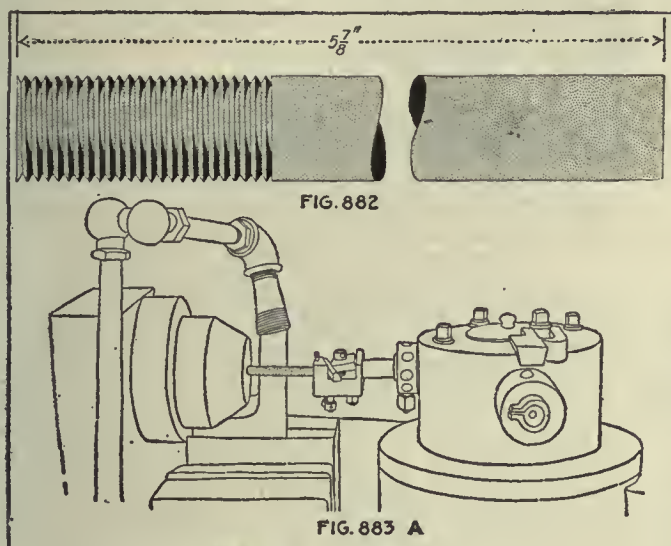

FIG. 882

FIG. 883 A

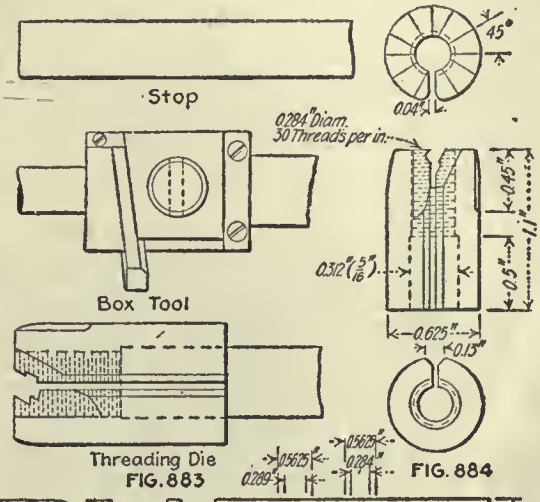

FIG. 883

FIG. 884

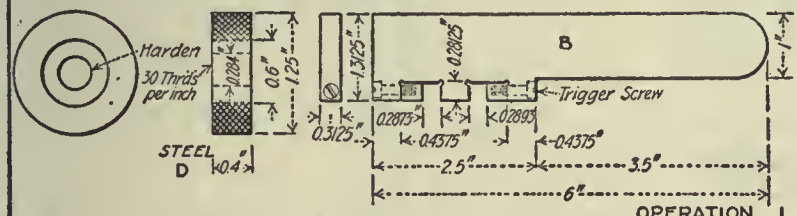

OPERATION 1

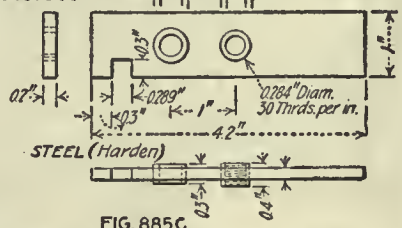

FIG. 885C

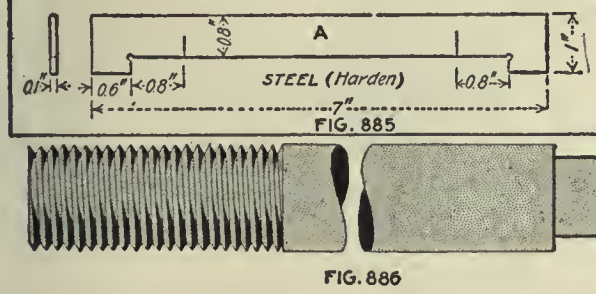

FIG. 885

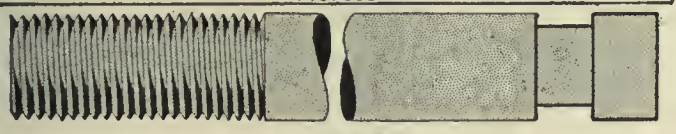

FIG. 886

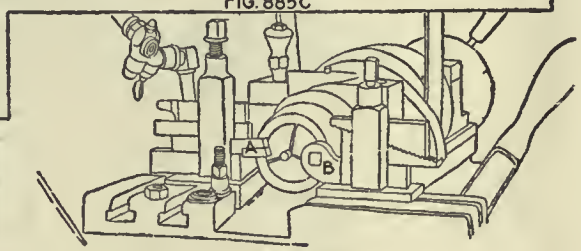

FIG. 887

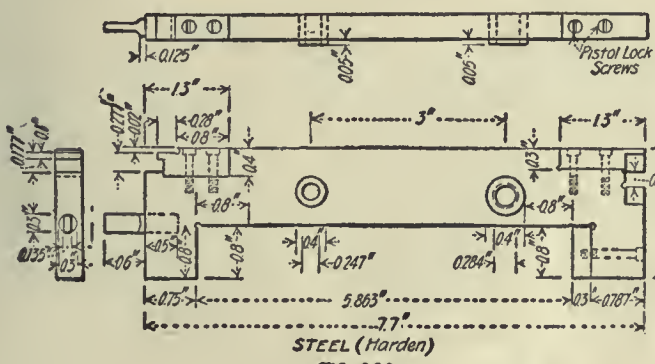

FIG. 889

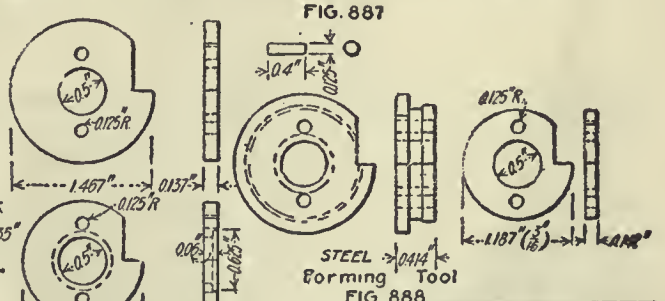

FIG. 888

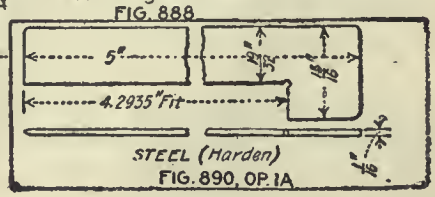

FIG. 890, OP. 1A

OPERATION 3

The firing-pin rod, Fig. 881, is made of Class B material, 0.290 in. in diameter, with an allowance of minus 0.002 in. This is made from wire that must be annealed, bright, straight, free from kinks and capable of being easily worked in automatic machines. It must be suitable for being handled in an open fire and is drawn to a low temper in a lead bath. The pin is screwed into the cocking piece and is riveted over the end, the length of the rod being so adjusted that when the end of the cocking piece bears against the interior shoulder of the sleeve the striker point will project the proper distance beyond the face of the bolt. The firing-pin rod and the cocking piece when assembled make up the unit known as the "firing pin." The firing-pin rod itself is only an automatic screw-machine job, except for the heating and tempering and the necessary burring operations.

OPERATIONS ON FIRING-PIN ROD

Operations

1 Cutting off and threading
3 Forming joint (3 and AA grouped)
AA Removing burrs left by operation 3
4 Tempering (two operations hardening)
5 Straightening
6 Polishing circle, except 1½ in. of rear end.
7 Bluing
1-A Assembling with cocking piece
8 Polishing rear end
9 Etching rear end

OPERATION 1. CUTTING OFF AND THREADING

Transformation—Fig. 882; machine diagram, Fig. 883-A. Machine Used—Hartford Machine Screw Co. 1-in. automatic, Fig. 883-A. Number of Operators per Machine—One. Work-Holding Devices—Spring chuck. Tool-Holding Devices—Turret of machine. Cutting Tools—See Fig. 884. Number of Cuts—Two. Cut Data—250 r.p.m.; ⅝-in. feed. Coolant—Cutting oil. Average Life of Tool Between Grindings—300 pieces. Gages—Fig. 885; A, length; B, diameter of wire; C, diameter of pin and thread; D, thread gage. Production—35 per hr. Note—These are cut off and threaded by the same machine.

OPERATION 3. FORMING JOINT

Transformation—Fig. 886. Machine Used—Pratt & Whitney hand screw machine. Number of Operators per Machine—One. Work-Holding Devices—Draw-in chuck. Tool-Holding Devices—Tool post A and back rest B on crossfeed carriage, Fig. 887. Cutting Tools—Circular cross-slide tool, Fig. 888. Number of Cuts—Two. Cut Data—900 r.p.m.; hand feed. Coolant—Cutting oil, ¼-in. stream. Average Life of Tool Between Grindings—300 pieces. Gages—Fig. 889, width of groove, diameter of head. Production—70 per hr.

OPERATION AA. REMOVING BURRS LEFT BY OPERATION 3

Number of Operators—One. Description of Operation—Filing burrs thrown up by operation 3. Apparatus and Equipment Used—File. Production—Grouped with operation 3.

OPERATION 4. TEMPERING (TWO OPERATIONS HARDENING)

Number of Operators—One. Description of Operation—Harden in open fire at 1,450 deg. F. and temper end of rod that fits in striker; tempered in oil at 900 deg. F. Apparatus and Equipment Used—Rockwell high-pressure oil furnace, firebox about 12x24 in.; lead pot for drawing temper. Production—200 per hr.

OPERATION 5. STRAIGHTENING

Number of Operators—One. Description of Operation—Straightening after hardening; detect crooks by rolling on a bench plate. Apparatus and Equipment Used—Cast-iron bench plate, hammer and lead block. Production—175 per hr.

OPERATION 6. POLISHING CIRCLE, EXCEPT 1½ IN. OF REAR END

Number of Operators—One. Description of Operation—Polishing end for bluing. Apparatus and Equipment Used—Polishing jack and wheel. Production—200 per hr.

OPERATION 7. BLUING

Number of Operators—One. Description of Operation—Bluing rod after polishing; blued at 800 deg. F.; kept in solution from 2 to 4 min., then dipped in hot water and afterward in cold water with a layer of oil on top to coat with oil and prevent rusting. Apparatus and Equipment Used—Crucible containing mixture of 10 parts refined niter (saltpeter) to 1 part black oxide of manganese; heated to melting point. Production—About 800 per hr.

OPERATION 1-A. ASSEMBLING WITH COCKING PIECE

Number of Operators—One. Description of Operation—Heading over firing-pin rod after assembling with cocking piece. Apparatus and Equipment Used—Vise and hammer. Gages—Fig. 890, length of assembled pieces. Production—100 per hr.

OPERATION 8. POLISHING REAR END

Number of Operators—One. Description of Operation—Polishing rear end after heading. Apparatus and Equipment Used—Polishing jack and wheel. Production—350 per hr.

OPERATION 9. ETCHING REAR END

Number of Operators—One. Description of Operation—Etching end of cocking piece; there are a few pieces, such as the cocking piece, firing-pin rod and the safety lock, which are riveted in place after being browned; as the riveting must be smoothed down, thereby removing the browning, a special etching acid is used for coloring the polished portions to match the browning previously put on; this is done by putting some of the etching acid in a shallow glass dish and dipping into it the parts to be colored; in order to check the working of this acid the piece is immediately dipped in hot water, then in a dish of ammonia at full strength and then thoroughly covered with oil; the etching acid is composed of 1 qt. "tincture of steel," previously mentioned in connection with browning the barrel, on page 727, 2 oz. corrosive sublimate and 1 oz. nitric acid. Apparatus and Equipment Used—Etching acid, earthenware plate. Production—1,000 per hr.

The Cocking Piece

This is another instance where a small piece plays an important part. This fits inside the barrel of the sleeve and is guided by it. Its manufacture involves the use of specially made tools and fixtures and which are out of the ordinary. Then there are numerous special gages which show how closely the different parts conform to the desired standard. These operations involve the use of several different machines, from the screw machine, which turns the handle, to the profiler, by which the cam on the front end is cut to just the correct shape, all of the machines and operations involving the most careful work on the part of the operator.

The cocking piece is made from a drop forging of Class D material, 0.56 in. square. This, as the name implies, holds the firing pin in a cocked position and, together purpose. It works out admirably in practice, however, which is the final test of any design or method.

Great care is taken, however, to have the surface of this cam perfectly smooth. To this end the milling receives very careful attention and it is difficult to find a finer or smoother job of formed or irregular milling in any shop. A nine-toothed cutter, Fig. 936, running at 900 r.p.m. is used in milling this cam, and this together with the careful use of cutting oil leaves a splendid surface, which is quite important at this point.

Another particular point is the sear notch, this controlling the action of the trigger in releasing the firing pin and striker and exploding the powder charge in the cartridge. The smooth action of the trigger depends on the surfaces of the cocking piece and of the sear, and these

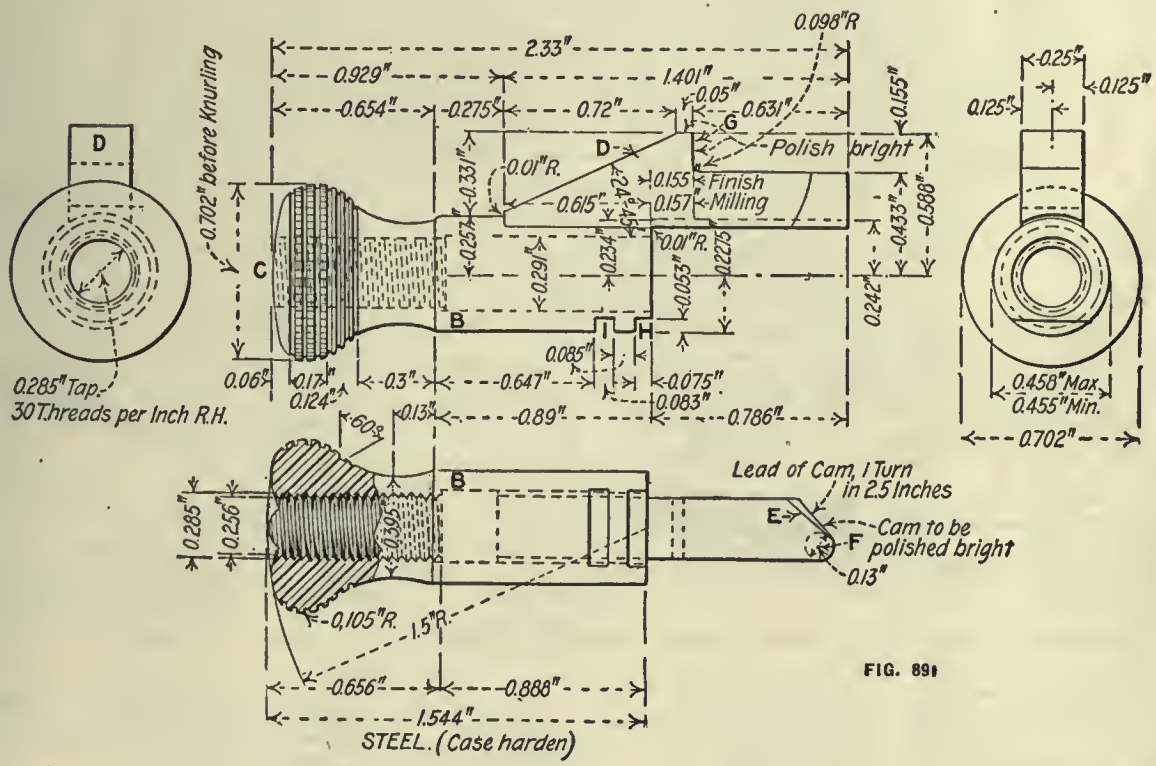

FIG. 891

with the firing-pin rod, constitutes the unit known as the firing pin. The main parts of the cocking piece are the body *B*, the knob *C*, the lug *D*, the cocking cam *E*, the nose *F*, the sear notch *G*, the locking shoulder *H* and the locking groove *I*, Fig. 891.

The cam on the side of the point is quite a particular piece of work as it is this inclined surface which forces the whole firing-pin assembly back into the firing or cocked position as the bolt is given a quarter turn. It is prevented from turning by the point or tongue sliding in a suitable slot in the sleeve. This cam is cut to a lead of one turn in 2.5 in., and seems quite steep for such a

are carefully honed with an oilstone to insure the desired smoothness of action under the pressure of the mainspring.

Besides the two points already mentioned the front surface of body is important in its relation to the total distance from the point of the striker. This face fits against the interior shoulder of the sleeve and the sleeve screws in the bolt, so that the distance the point of the striker will project through the hole in the front end of the bolt depends on a number of factors.

It requires very careful gaging to be sure the assembled distance is correct and is one of the reasons for the final hand facing cutter and its fixture, shown in Fig. 728,

*Copyright, 1917, Hill Publishing Co.

operation 45½ on the bolt itself. These parts tie together so closely, in the final assembly and in the correct working of the rifle, that they can almost be considered as a unit.

The method of countersinking the back end of the knob for riveting over the firing pin rod is both simple and efficient. A five sided punch, forced into the hole in a punch press, gives ample space for riveting the end of the pin and also locks it securely against turning.

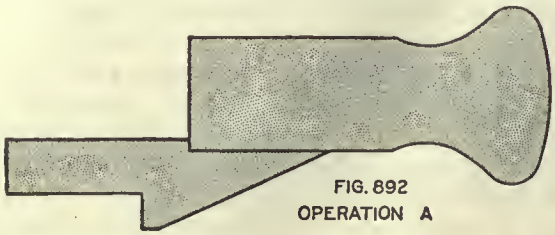

FIG. 892
OPERATION A

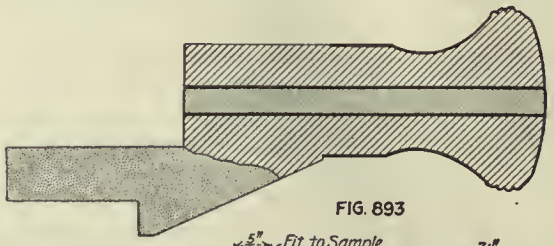

FIG. 893

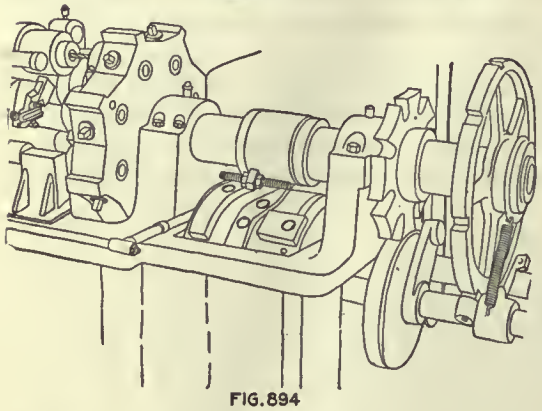

FIG. 894

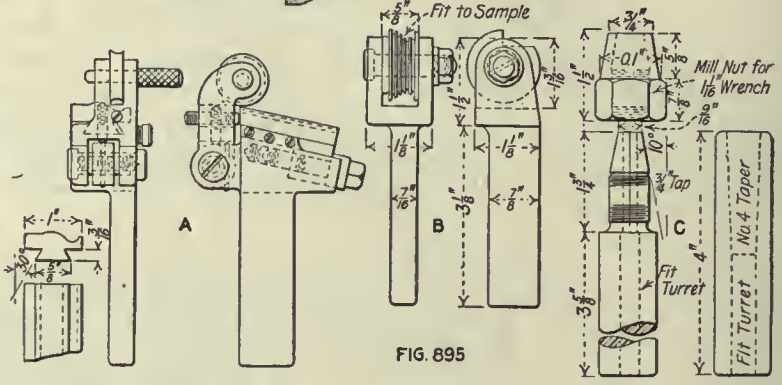

FIG. 895

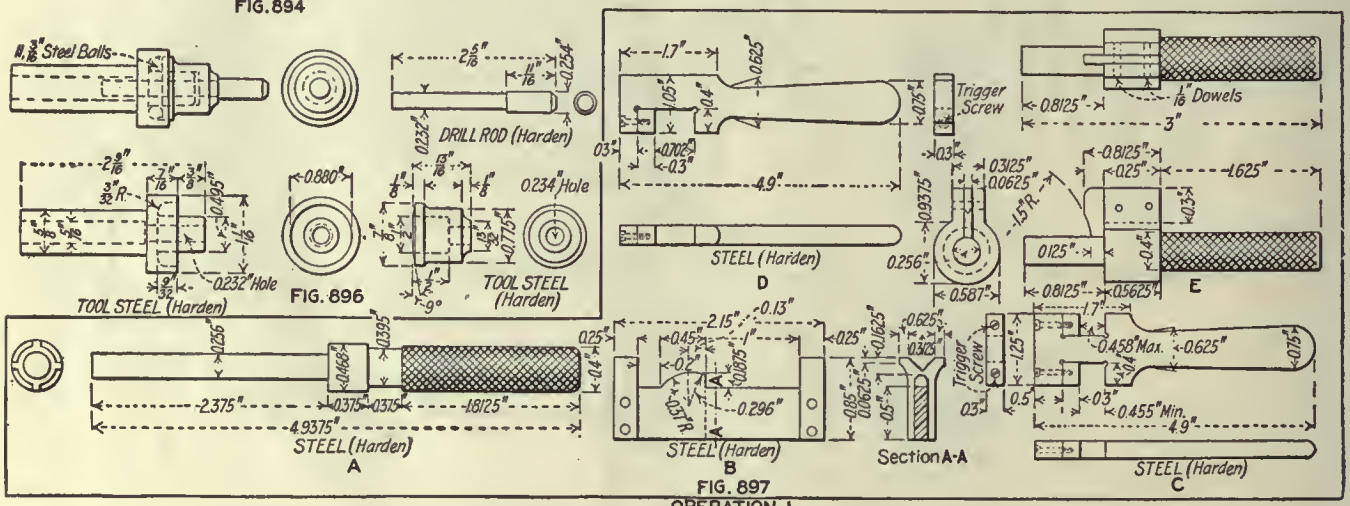

FIG. 896

FIG. 897
OPERATION 1

This is a much more simple method than we find employed in some other cases, but it answers every purpose and ought to be applicable to other kinds of work.

OPERATIONS ON COCKING PIECE

Operation	
A	Forging from bar
B	Annealing
3-1	Pickling
C	Trimming
D	Grinding head
1	Drilling, reaming, facing, grooving, turning and knurling
2	Counterboring front end to length
4	Milling left side to finish } 3, 4 and AA grouped
3	Milling right side to finish } 3, 4 and AA grouped
AA	Reaming burrs left by operation 4 } 3, 4 and AA grouped
5	Milling front across bottom and rear of lug to finish
BB	Removing burrs left by operation 5
CC	Burring (group 5, BB, CC, 11 and DD)
11	Swaging
DD	Removing burrs left by swaging
7	Profiling nose to finish
12	Hand-milling, freeing cut to top of tang (12 and EE grouped)
EE	Removing burrs left by operation 12
9	Counterboring, firing-pin body size
8	Milling cam
6	Milling safety-lock notches
10	Tapping firing-pin hole
13	Milling sear notch to finish
15	Polishing outer surface except rear end and sear notch
16	Filing, general
17	Casehardening
18	Polishing sear notch
18½	Polishing cocking cam
19	Finishing; honing surface under sear notch

OPERATION A. FORGING FROM BAR

Transformation—Fig. 892. Number of Operators—One. Description of Operation—Breaking down and blocking to shape. Apparatus and Equipment Used—Billings & Spencer 400-lb. drop hammer. Production—125 per hr.

OPERATION B. ANNEALING

Number of Operators—One. Description of Operation—Placed in iron pots with powdered charcoal; heated to 850 deg. C. (1,562 deg. F.) in Brown & Sharpe annealing furnaces; left overnight to cool. Apparatus and Equipment Used—Iron pots, Brown & Sharpe annealing furnaces.

OPERATION 3. PICKLING

Number of Operators—One. Description of Operation—Placed in the pickling solution and left about 10 min.; the pickling solution is 1 part sulphuric acid to 9 parts water. Apparatus and Equipment Used—Wire baskets, cast lead tanks and pulley block.

OPERATION C. TRIMMING

Machine Used—Bliss press. Number of Operators per Machine—One. Punches and Punch Holders—Square-shank punch holder. Dies and Die Holders—Die set in shoe held by setscrew. Stripping Mechanism—Pushed through die. Production—600 per hr.

OPERATION D. GRINDING HEAD

Number of Operators—One. Description of Operation—Grinding head to allow for spotting. Apparatus and equipment Used—Abrasive wheel. Production—1,000 per hr.

OPERATION 1. DRILLING, REAMING, FACING, GROOVING, TURNING AND KNURLING

Transformation—Fig. 893. Machine Used—New Britain automatic. Number of Operators per Machine—One. Work-Holding Devices—Held by two-jaw chuck, Fig. 894. Tool-Holding Devices—Chuck on spindle of machine. Cutting Tools

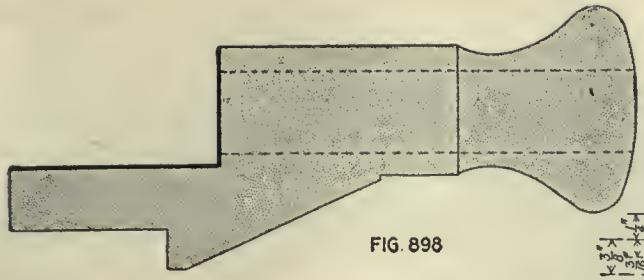

FIG. 898

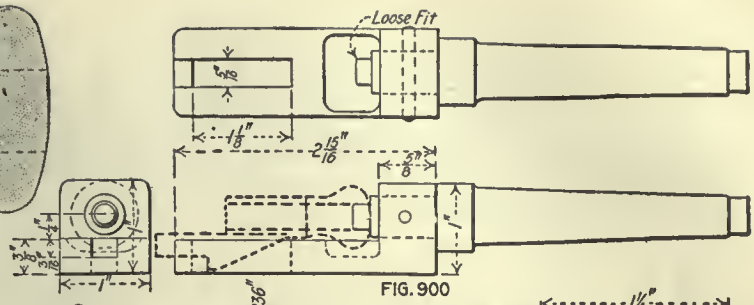

FIG. 900

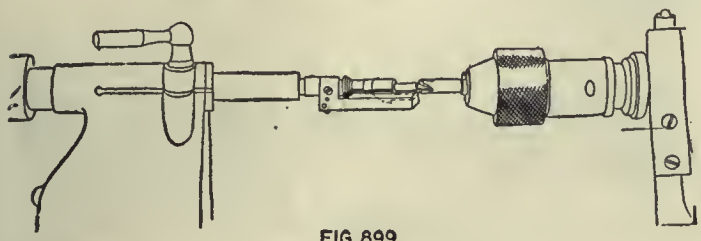

FIG. 899

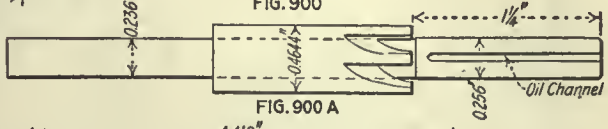

FIG. 900 A

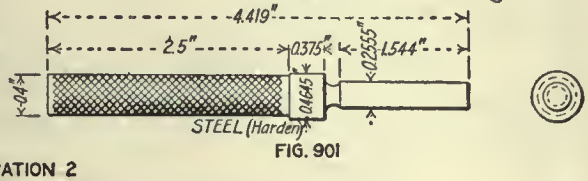

FIG. 901

OPERATION 2

—Fig. 895; A, forming tool; B, circular grooving tool for head; C, drill chucks and collet. Number of Cuts—Seven. Cut Data—450 r.p.m.; 5/8-in. feed. Coolant—Cutting oil, 1/4-in. stream. Average Life of Tool Between Grindings—800 pieces. Special Fixtures—Fig. 896, revolving center. Gages—Fig. 897; A, diameter of hole; B, shape and diameter of neck; C, outside diameter; D, large diameter; E, curve of knob. Production—50 per hr.

OPERATION 2. COUNTERBORING FRONT END TO LENGTH

Transformation—Fig. 898. Machine Used—Pratt & Whitney 12-in. speed lathe. Number of Operators per Machine—One. Work-Holding Devices—Held in centering fixture, Fig. 899, on tailstock, guided by pilot; details in Fig. 900. Tool-Holding Devices—Drill chuck. Cutting Tools—Fig. 900-A, counterbore. Number of Cuts—One. Cut Data—900 r.p.m.; hand feed. Coolant—Cutting oil, put on with brush. Average Life of Tool Between Grindings—5,000 pieces. Gages—Fig. 901, diameter and depth of counterbore. Production—50 per hr.

OPERATIONS 3 AND 4. MILLING RIGHT AND LEFT SIDES TO FINISH

Transformation—Fig. 902. Machine Used—Pratt & Whitney No. 2 Lincoln miller. Number of Machines per Operator—Two. Work-Holding Devices—On stud clamped by vise jaws, Fig. 903; details in Fig. 904; both vise jaws moved by one cam. Tool-Holding Devices—Standard arbor. Cutting Tools—Fig. 905, milling cutter. Number of Cuts—One. Cut Data—60 r.p.m.; 5/8-in. feed. Coolant—Compound, two 1/4-in. streams. Average Life of Tool Between Grindings—3,000 pieces. Gages—Fig. 906; A, width and central location of nose; 906-B, diameter of barrel; 906-C, radius of body. Production—100 per hr.

OPERATION AA. REAMING BURRS LEFT BY OPERATION 4

Number of Operators—One. Description of Operation—Reaming burrs thrown up by operations 3 and 4. Apparatus and Equipment Used—Hand reamer, Fig. 907. Production—Grouped with operations 3 and 4.

FIG. 902

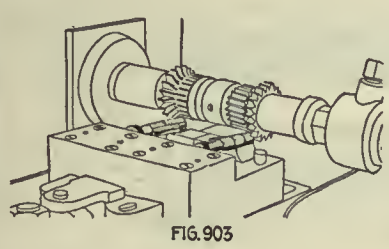

FIG. 903

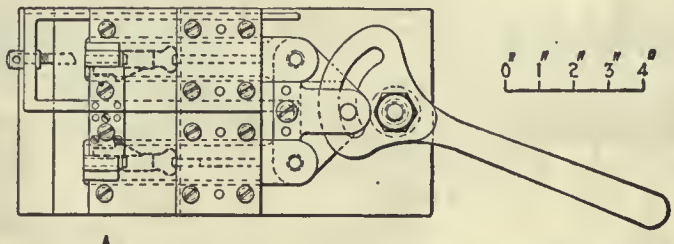

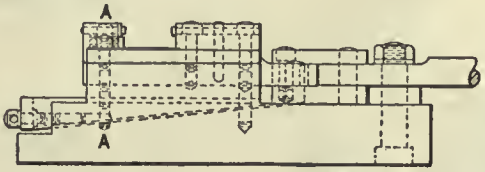

FIG. 904

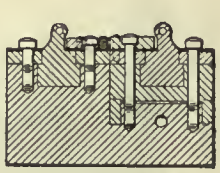

Section A-A

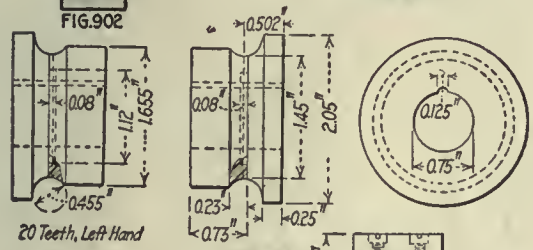

20 Teeth, Left Hand

FIG. 905

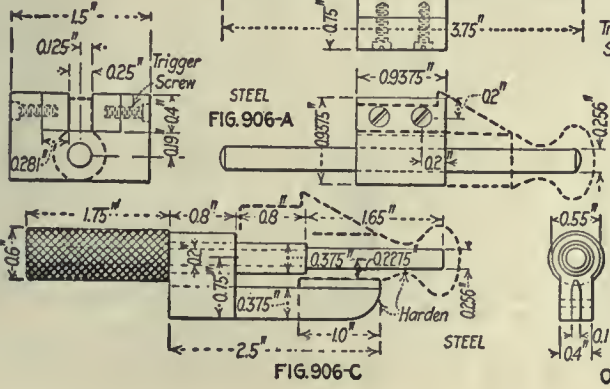

FIG. 906-A

FIG. 906-C

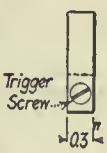

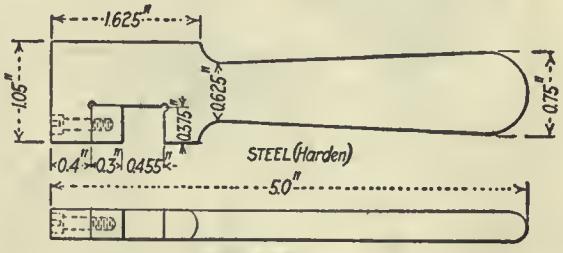

FIG. 906-B

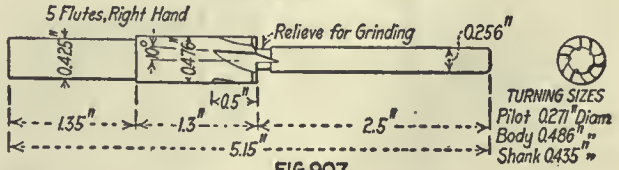

FIG. 907

OPERATION 3&4

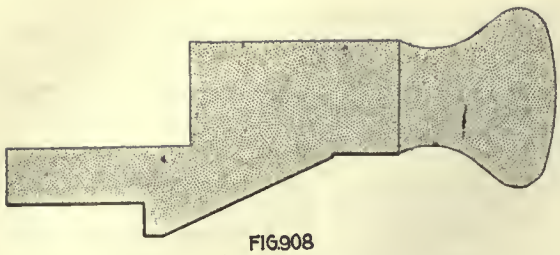

FIG.908

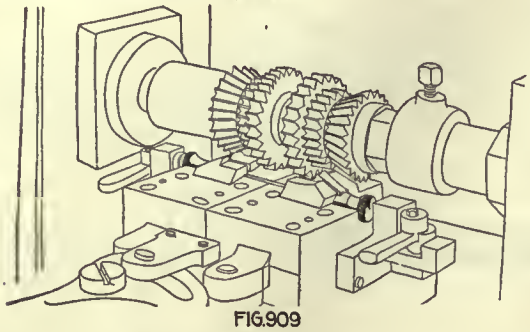

FIG.909

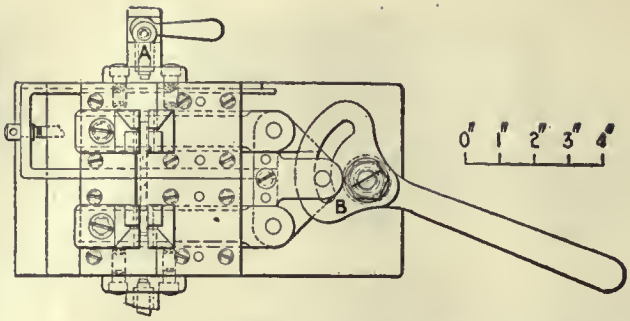

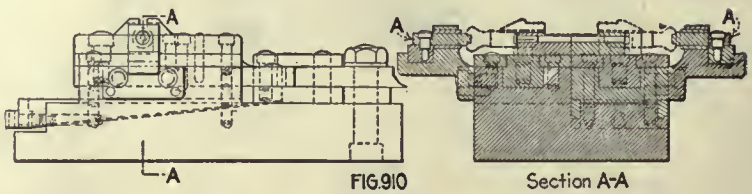

FIG.910

Section A-A

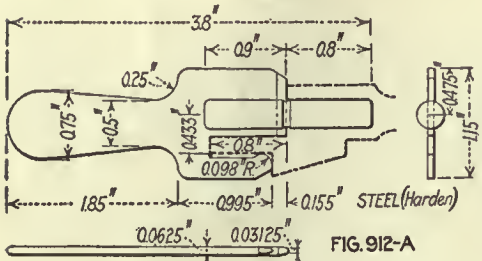

FIG. 912-A

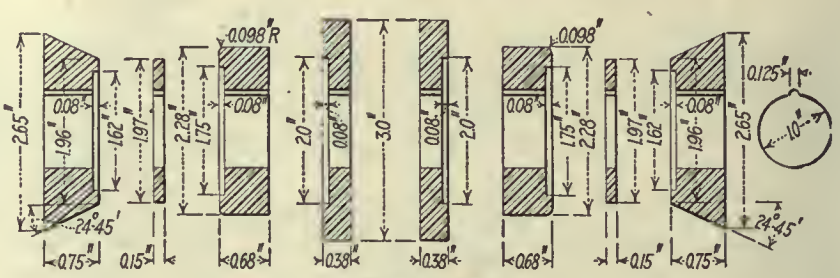

FIG. 911

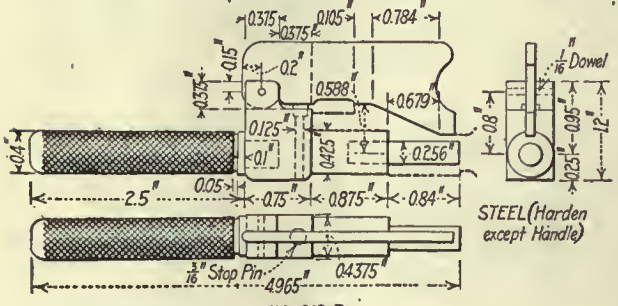

FIG. 912-B

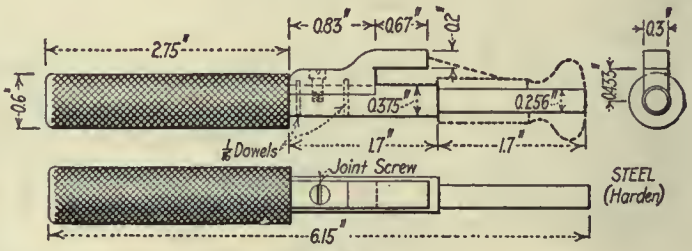

FIG. 912-C

OPERATION 5

FIG. 913

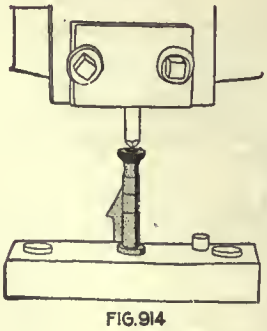

FIG. 914

FIG. 915

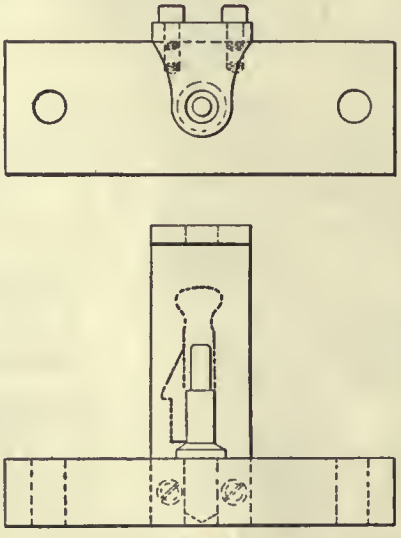

FIG. 916

OPERATION 11

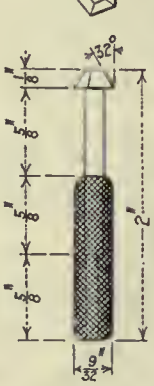

FIG. 917

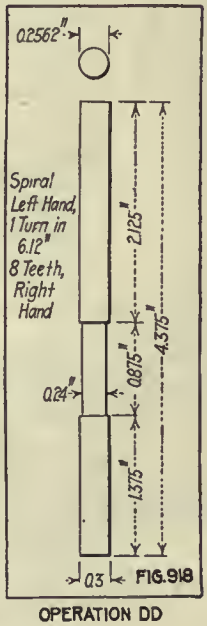

FIG. 918

OPERATION DD

OPERATION 5. MILLING FRONT ACROSS BOTTOM AND REAR OF LUG TO FINISH

Transformation—Fig. 908. Machine Used—Pratt & Whitney No. 2 Lincoln type. Number of Operators per Machine—One. Work-Holding Devices—On studs clamped by vise jaws, Fig. 909; studs are shown at A, Fig. 910, which also shows the side clamping by means of a single cam B. Tool-Holding Devices—Standard arbor. Cutting Tools—Fig. 911, two gangs. Number of Cuts—One. Cut Data—Speed, 60 r.p.m.; ⅝-in. feed. Coolant—Cutting oil, put on with brush. Average Life of Tool Between Grindings—3,000 pieces. Gages—Fig. 912; A, sear notch; B, rear of lug, finger is pivoted; C, location of lug, notch and counterbore. Production—100 per hr.

OPERATION 11. SWAGING

Transformation—Fig. 913. Machine Used—Pratt & Whitney 12-in. swaging press, Fig. 914. Number of Operators per Machine—One. Punches and Punch Holders—Swaging punch, Fig. 915. Dies and Die Holders—Cast-iron block, screwed to back of press, with pin for centering work, Fig. 916. Average Life of Punches—3,500 pieces. Dies—Same. Gages—Fig. 917, shape and depth. Production—75 per hr.

OPERATION DD. REMOVING BURRS LEFT BY SWAGING

Number of Operators—One. Description of Operation—Removing burrs thrown up by operation 11. Apparatus and Equipment Used—File and reamer, Fig. 918.

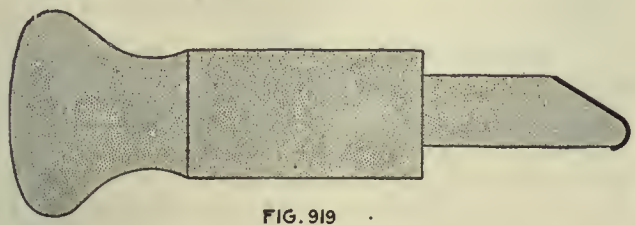

FIG. 919

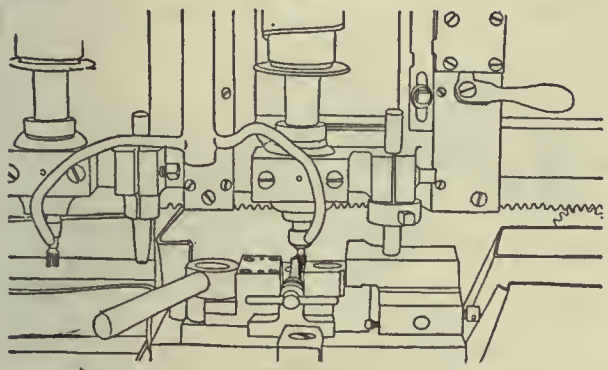

FIG. 920

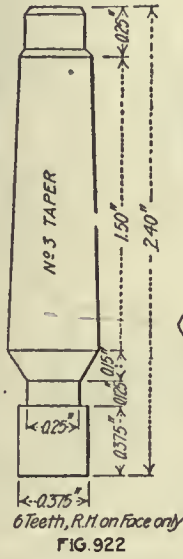

FIG. 922

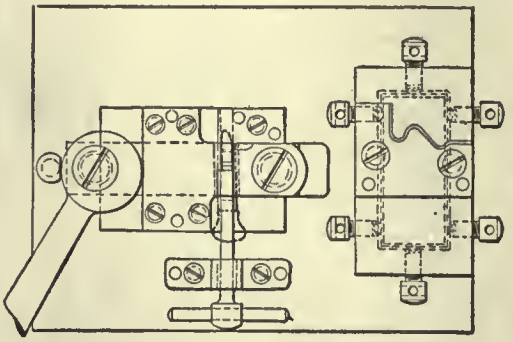

FIG. 921

OPERATION 7

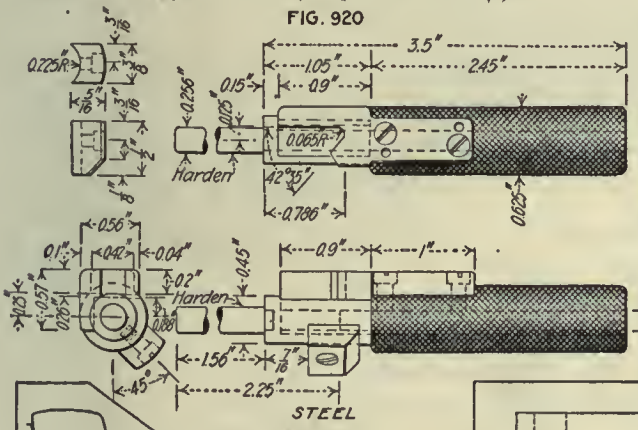

FIG. 923

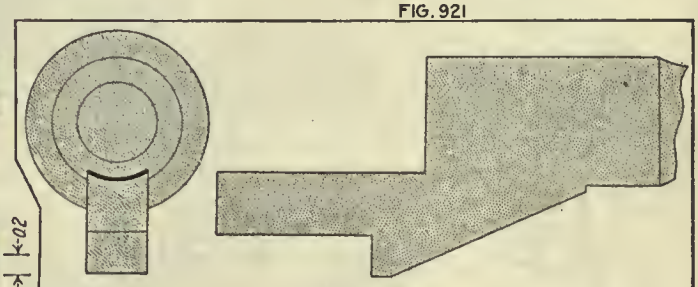

FIG. 924

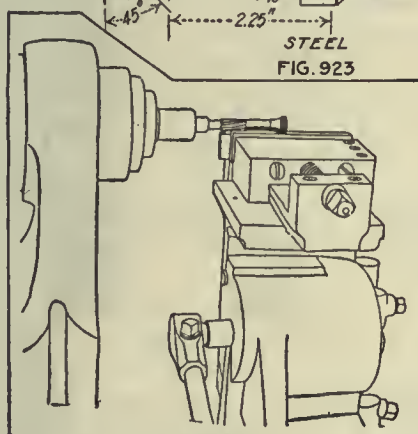

FIG. 925

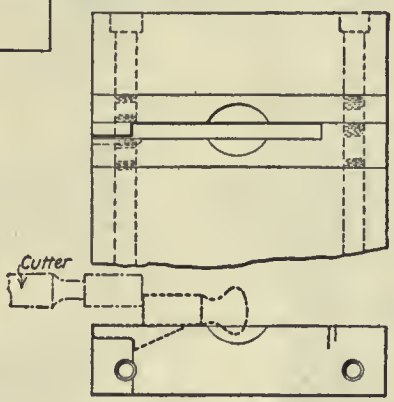

FIG. 926

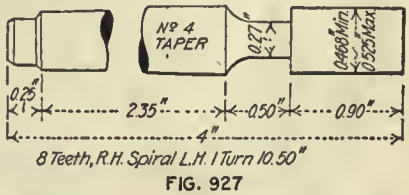

FIG. 927

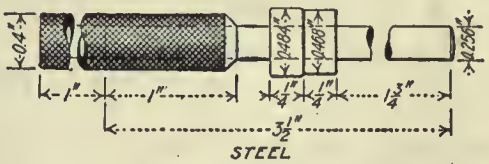

FIG. 928

OPERATION 12

OPERATION BB. REMOVING BURRS LEFT BY OPERATION 5

Number of Operators—One. Description of Operation—Removing burrs thrown up by operation 5. Apparatus and Equipment Used—File. Production—Grouped with operation 5.

OPERATION CC. BURRING

Number of Operators—One. Description of Operation—Removing burrs thrown up by operations 3 and 4. Apparatus and Equipment Used—File. Production—Grouped with operations 5, 11, BB, CC and DD.

OPERATION 7. PROFILING NOSE TO FINISH

Transformation—Fig. 919. Machine Used—Pratt & Whitney No. 1 profiler, Fig. 920. Number of Operators per Machine—One. Work-Holding Devices—Held on stud clamped by vise jaw, Fig. 921. Tool-Holding Devices—Taper Shank. Cutting Tools—Milling cutter, Fig. 922. Number of Cuts—Two. Cut Data—Speed, 1,200 r.p.m.; hand feed. Coolant—Compound. Average Life of Tool Between Grindings—500 pieces. Gages—Fig. 923, length and form. Production—75 per hr. Note—The use of a mandrel for supporting the work again comes into play, as can be seen in Figs. 920 and 921.

OPERATION 12. HAND-MILLING, FREEING CUT TOP OF TANG

Transformation—Fig. 924. Machine Used—Garvin No. 3 hand milier, Fig. 925. Number of Operators per Machine—One. Work-Holding Devices—Vise jaws, Fig. 926. Tool-Holding Devices—Taper shank. Cutting Tools—Milling cutter, Fig. 927. Number of Cuts—One. Cut Data—Speed, 600 r.p.m.; hand feed. Coolant—None. Average Life of Tool Between Grindings—1,500 pieces. Gages—Fig. 928, radius of tang. Production—300 per hr.

OPERATION EE. REMOVING BURRS LEFT BY OPERATION 12

Number of Operators—One. Description of Operation—Removing burrs thrown up by operation 12. Apparatus and Equipment Used—File. Production—Grouped with operation 12.

Fig. 936. Number of Cuts—One. Cut Data—900 r.p.m.; hand feed. Coolant—Cutting oil, put on with brush. Average Life of Tool Between Grindings—1,000 pieces. Gages—Fig. 937, length and shape. Production—50 per hr.

OPERATION 6. MILLING SAFETY-LOCK NOTCHES

Transformation—Fig. 938. Machine Used—Pratt & Whitney No. 2 Lincoln milier. Number of Operators per Machine—One. Work-Holding Devices—Stud A, Fig. 939; clamped sidewise by screw B, while cam C forces the work on stud; details in Fig. 940. Tool-Holding Devices—Standard arbor. Cutting Tools—Fig. 941; two thin milling cutters A, separated by a collar B. Number of Cuts—One. Cut Data—60 r.p.m.; 5/8-in. feed. Coolant—Cutting oil, put on with brush. Average Life of Tool Between Grindings—4,000 pieces. Gages—Fig. 942; A, width of notches; 942-B, location of notches. Production—100 per hr.

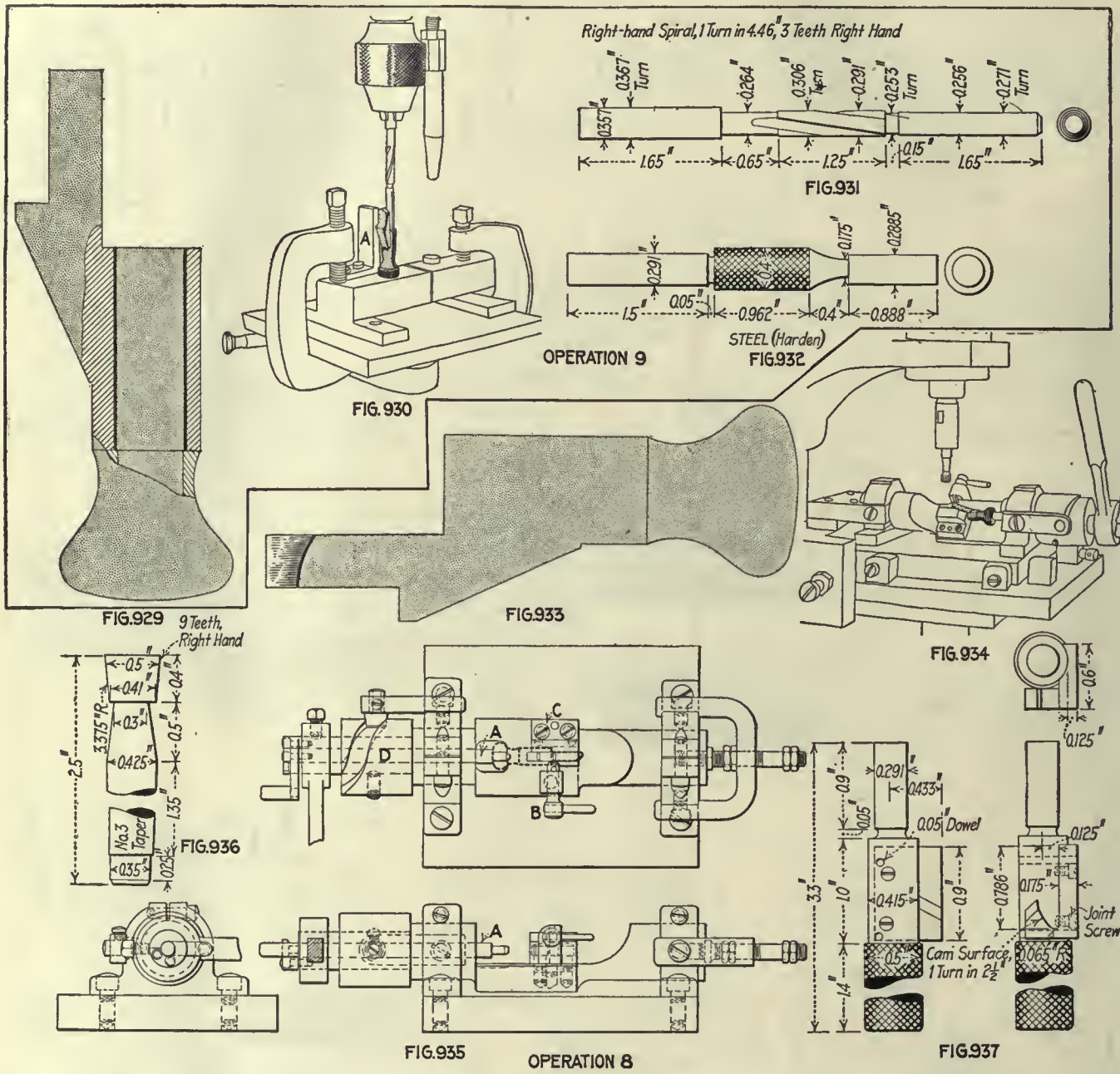

OPERATION 9. COUNTERBORING, FIRING-PIN BODY SIZE

Transformation—Fig. 929. Machine Used—Ames 16-in. three-spindle upright. Number of Operators per Machine—One. Work-Holding Devices—Set on stud in block clamped to table, prevented from turning by stop A, Fig. 930; pilot of reamer enters block below work. Tool-Holding Devices—In drill chuck. Cutting Tools—Fig. 931. Number of Cuts—One. Cut Data—260 r.p.m.; hand feed. Coolant—Cutting oil, 1/4-in. stream. Average Life of Tool Between Grindings—1,000 pieces. Gages—Fig. 932. Production—120 per hr.

OPERATION 8. MILLING CAM

Transformation—Fig. 933. Machine Used—Ames 16-in. upright drilling machine. Number of Operators per Machine—One. Work-Holding Devices—Held on rotating fixture, Fig. 934; details in Fig. 935; work is held on stud A and clamped by screw B against block C; guided in rotation by cam D. Tool-Holding Devices—Taper shank. Cutting Tools—End mill.

OPERATION 10. TAPPING FIRING-PIN HOLE

Transformation—Fig. 943. Machine Used—Pratt & Whitney 14-in. tapping machine. Number of Operators per Machine—One. Work-Holding Devices—Fixture on tailstock, Fig. 944; work lies in holder A; notch prevents its pulling out on withdrawal of tap. Tool-Holding Devices—Tap screw chuck. Cutting Tools—Fig. 945. Number of Cuts—One. Cut Data—300 r.p.m. Coolant—Cutting oil. Average Life of Tool Between Grindings—5,000 pieces. Gages—Fig. 946, plug gage for thread. Production—200 per hr.

OPERATION 13. MILLING SEAR NOTCH TO FINISH

Transformation—Fig. 947. Machine Used—Pratt & Whitney Lincoln type No. 2. Number of Operators per Machine—One. Work-Holding Devices—Held upright on stud clamped on tang by jaws, Fig. 948; details in Fig. 949. Tool-Holding Devices—Standard arbor. Cutting Tools—Fig. 950. Number of Cuts—One. Cut Data—70 r.p.m.; 5/8-in. feed. Coolant—Compound.

¼-in. stream. Average Life of Tool Between Grindings—4,000 pieces. Gages—Fig. 951, height. Production—100 per hr.

OPERATION 15. POLISHING OUTER SURFACE EXCEPT END AND SEAR NOTCH

Number of Operators—One. Description of Operation—Polishing all outer surfaces except end and sear notch. Apparatus and Equipment Used—Polishing jack and wheel. Production—50 per hr.

FIG.938

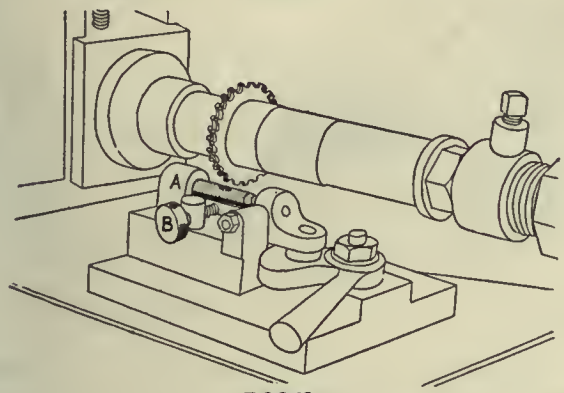

FIG.939

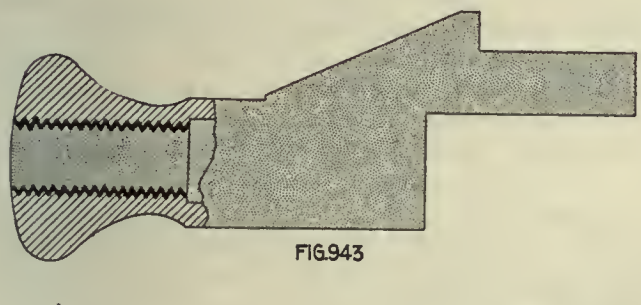

FIG.943

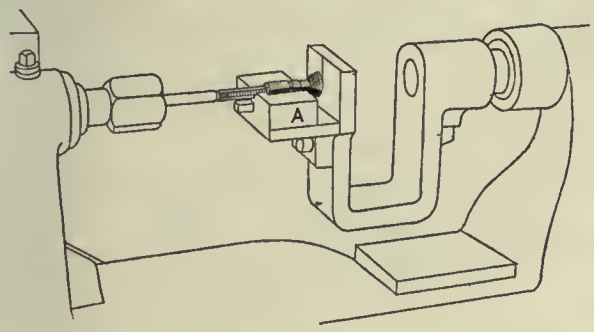

FIG.944

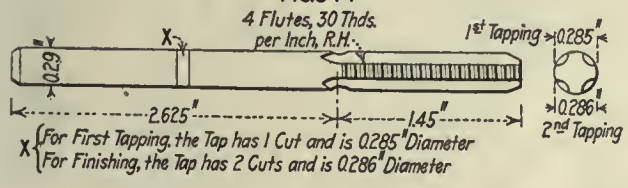

FIG.945

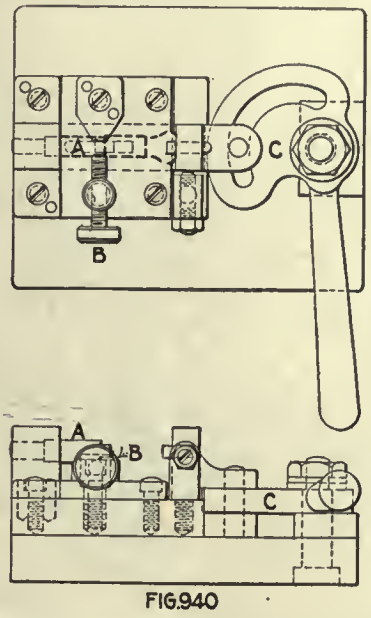

FIG.940

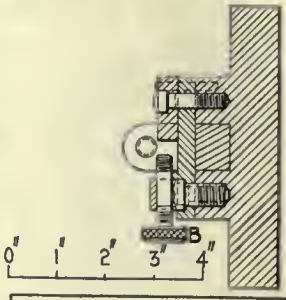

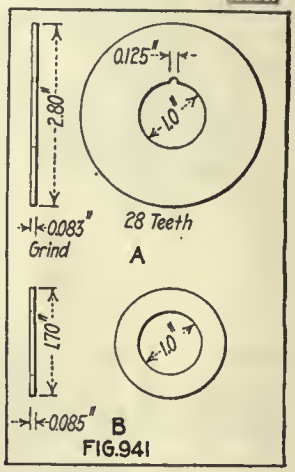

FIG.941

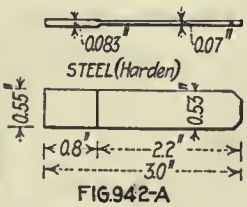

FIG.942-A

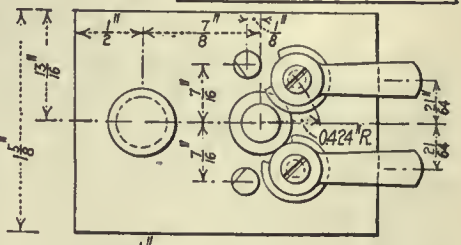

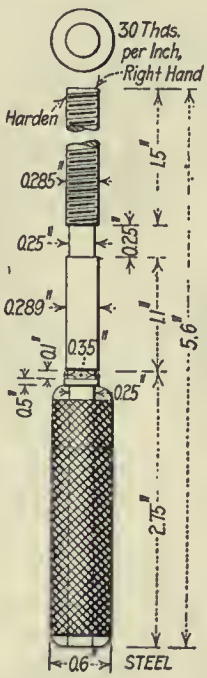

FIG.946

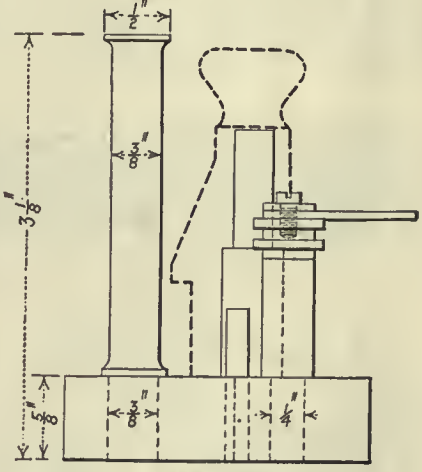

FIG.942-B

OPERATION 6

OPERATION 16. FILING, GENERAL

Number of Operators—One. Description of Operation—General filing and cornering. Apparatus and Equipment Used—File. Production—50 per hr.

OPERATION 17. CASEHARDENING

Number of Operators—One. Description of Operation—Pack in whole new bone, caseharden at 750 deg. C. (1.382 deg. F.) for 2½ hr.; quench in oil. Apparatus and Equipment Used—Cast-iron pots, oil-fired casehardening furnaces.

OPERATION 18. POLISHING SEAR NOTCH TO REMOVE ROUGHNESS DUE TO CASEHARDENING

Number of Operators—One. Description of Operation—Polishing sear notch to finish. Apparatus and Equipment Used—Polishing jack and wheel. Production—600 per hr.

OPERATION 18½. POLISHING COCKING CAM TO INSURE EASY ACTION

Number of Operators—One. Description of Operation—Polishing cam, removing cutter marks. Apparatus and Equipment Used—Polishing jack and wheel. Production—1,000 per hr. Note—This makes the cocking action of bolt easy and smooth.

FIG. 947

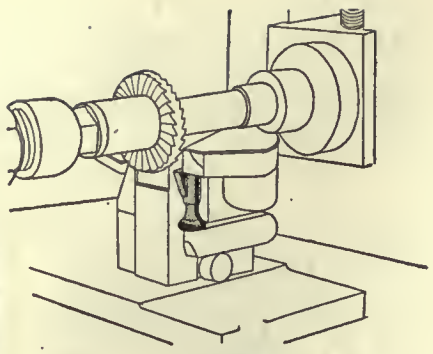

FIG. 948

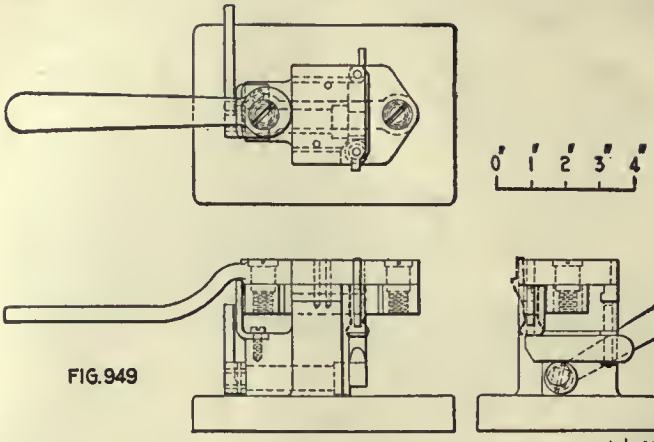

FIG. 949

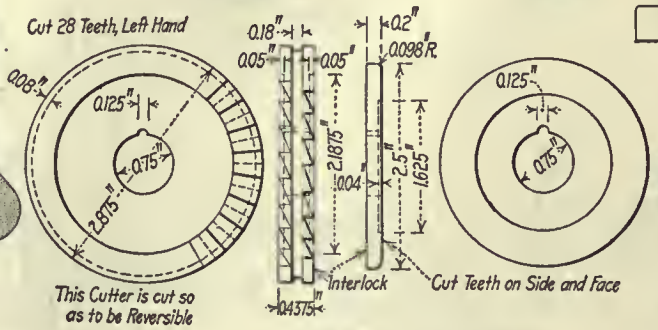

FIG. 950

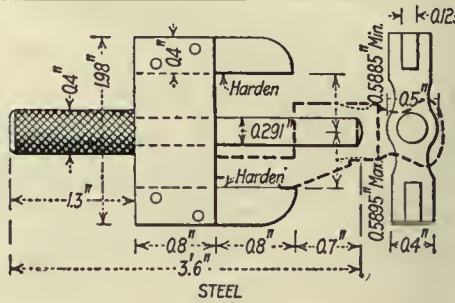

FIG. 951

OPERATION 13

OPERATION 19. FINISHING; HONING SURFACE UNDER SEAR NOTCH

Number of Operators—One. Description of Operation—Honing point of sear notch. Apparatus and Equipment Used—Oilstone in hand. Production—1,000 per hr.

Firing-Pin Sleeve

The firing-pin sleeve, as shown in detail in Fig. 952, holds the striker in position on the end of the firing-pin rod and is kept in place by the mainspring. It is made of Class D steel. It is entirely an automatic screw-machine job and is finished at one operation except for burring and bluing.

This sleeve is part of an ingenious method of holding the striker in place. The main or firing spring is first slipped over the firing pin rod, then the firing pin sleeve is put over the end of rod. The spring is compressed until the sleeve can slide back far enough to clear the groove in the end of the rod, the striker is slipped in place and the sleeve released. The main spring forces it over the end of the striker, effectually holding it in place, yet allowing it to be easily disassembled by merely compressing the main spring. This form of fastening may and should have other applications in various machine parts.

OPERATION 1. AUTOMATIC TURNING

Transformation—Fig. 953; machining diagram, Fig. 954. Machine Used—Cleveland 1-in. Number of Operators per Machine—One. Work-Holding Devices—Draw-back chuck. Tool-Holding Devices—Turret of machine. Cutting Tools—Fig. 955; A, stop; B, large drill; C, smaller drill; D, counterbore; E, form cutter on cross-slide; F, cutoff on cross-slide. Cut Data—600 r.p.m.; ⅝-in. feed. Coolant—Cutting oil, ½-in. stream. Average Life of Tools Between Grindings—300 pieces. Gages—Fig. 956. Production—30 per hr.

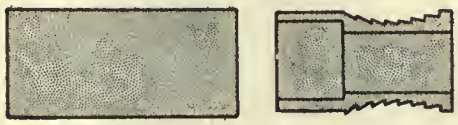

FIG. 953

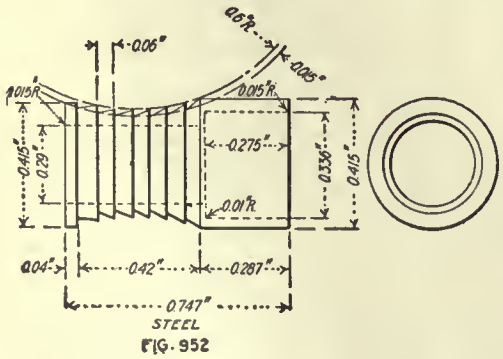

FIG. 952

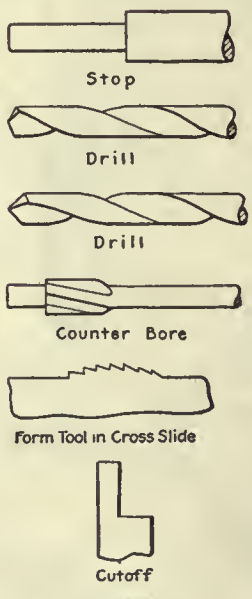

FIG. 954
OPERATION 1

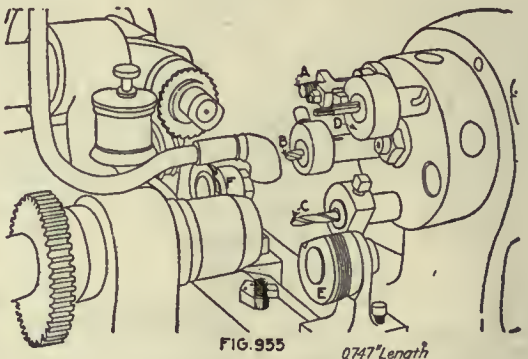

FIG. 955

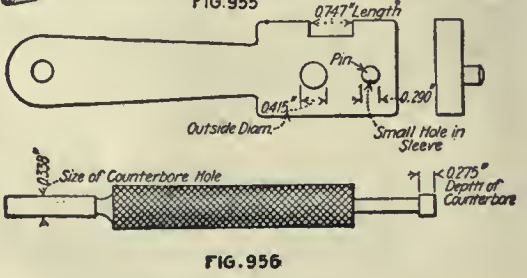

FIG. 956

Striker, Mainspring and Extractor

These three parts, the striker, mainspring and extractor, are all important in the proper functioning of the rifle. The first is very particular in some of its details, such as the point and the distance it projects through the bolt where it strikes the percussion or detonating element in the cartridge. It starts with the automatic screw machine and uses the profiler to finish the other end.

OPERATION 1. FORMING BODY IN AUTOMATIC SCREW MACHINE

Transformation—Fig. 958; machining diagram, Fig. 959. Machine Used—Gridley automatic, Fig. 960; Fig. 961 shows set-up on Hartford automatic. Number of Operators per Machine—One. Work-Holding Devices—Draw-back chuck. Tool-Holding Devices—Holder and box tool. Cutting Tools—Fig. 962; A, circular grooving tool; B, roughing mill for point; C, form tool for point; D, cutting-off tool. Number of Cuts—Four. Cut Data—350 r.p.m.; ½-in. feed. Coolant—Cutting oil, ½-in. stream. Average Life of Tool Between Grindings—500 pieces. Gages—Fig. 963; A, contour of point and length; B, diameter and total length. Production—25 per hr.

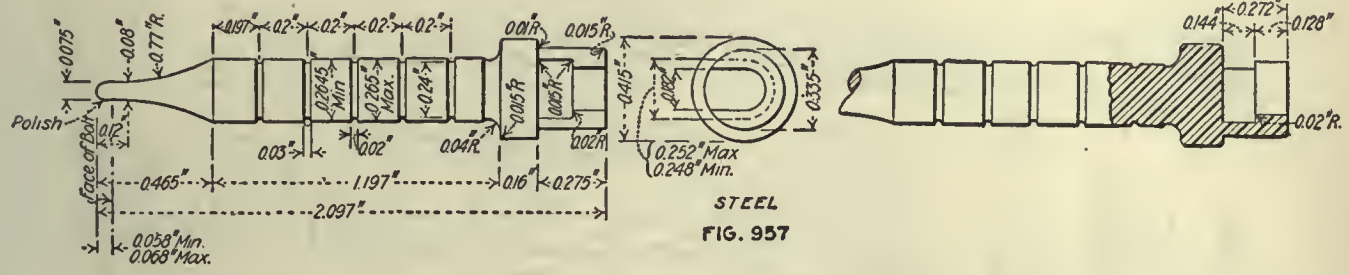

FIG. 957

FIG. 958

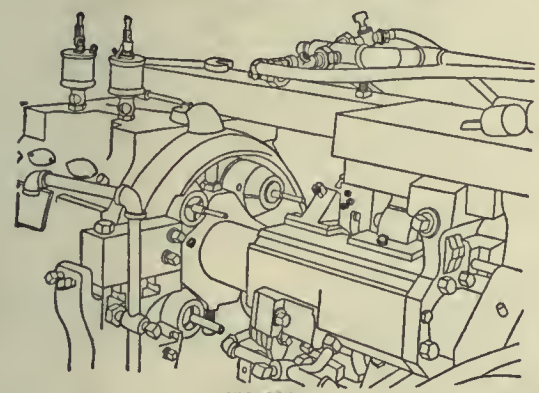

FIG. 960

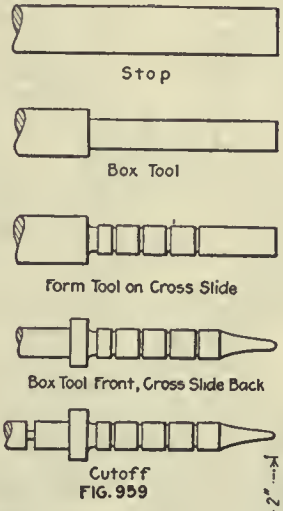

FIG. 959

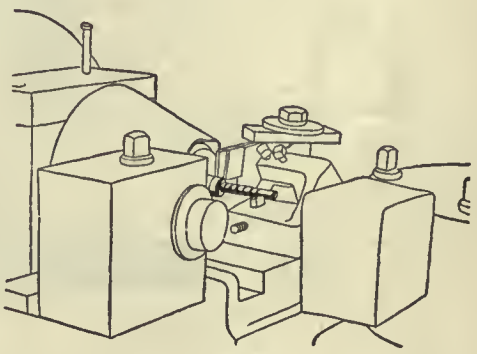

FIG. 961

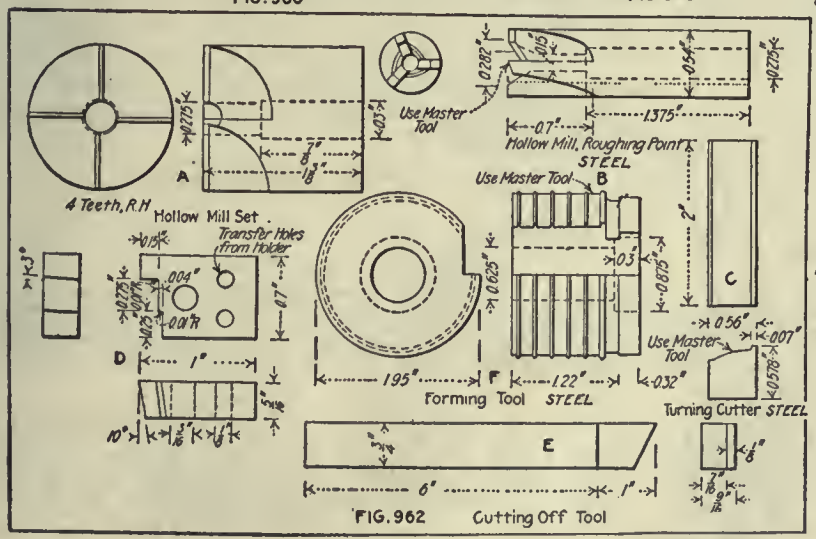

FIG. 962

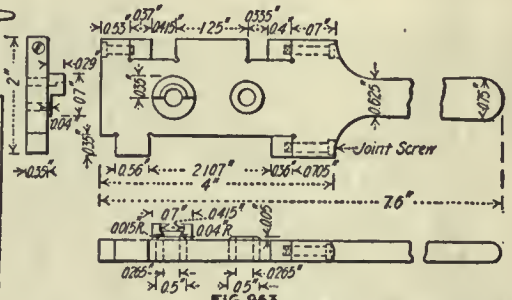

FIG. 963

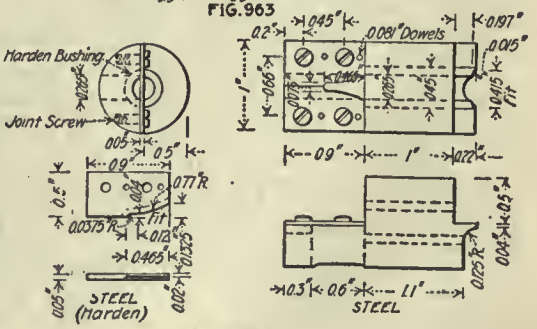

FIG. 963A

OPERATION 1

The Striker

The striker, as shown in detail in Fig. 957, is the piece that actually comes in contact with the percussion cap in the base of the rifle cartridge. It is held in position on the end of the firing-pin rod by the firing-pin sleeve and is made of Class B steel, 0.42 in. in diameter. It is wholly an automatic screw-machine job, with the exception of milling and profiling the side opening and recess which receives the end of the firing-pin rod. This, as has been shown in the assembly of the firing mechanism in the first article, page 636, Vol. 45, allows the end of the firing-pin rod to be slid in sideways where it is held by a sleeve, backed up by the mainspring which drives the striker against the cartridge. The point of the striker is hardened and the temper drawn in a lead bath to 900 deg. F. This is necessary to make it stand up against the hundreds of blows to which it is subjected during the life of the rifle.

OPERATIONS ON THE STRIKER

Operation	
1	Forming body in automatic screw machine
2	Squaring and drilling rear end in hand screw machine
3	Profiling for firing-pin head
4	Filing, general cornering
5	Tempering and hardening
6	Finishing point (in lathe)

FIG. 964

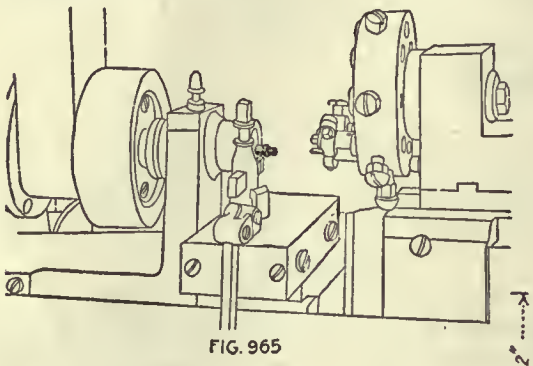

FIG. 965

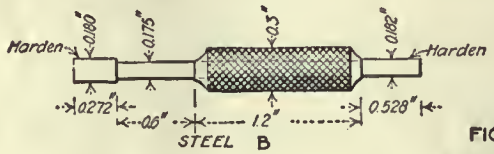

FIG. 967

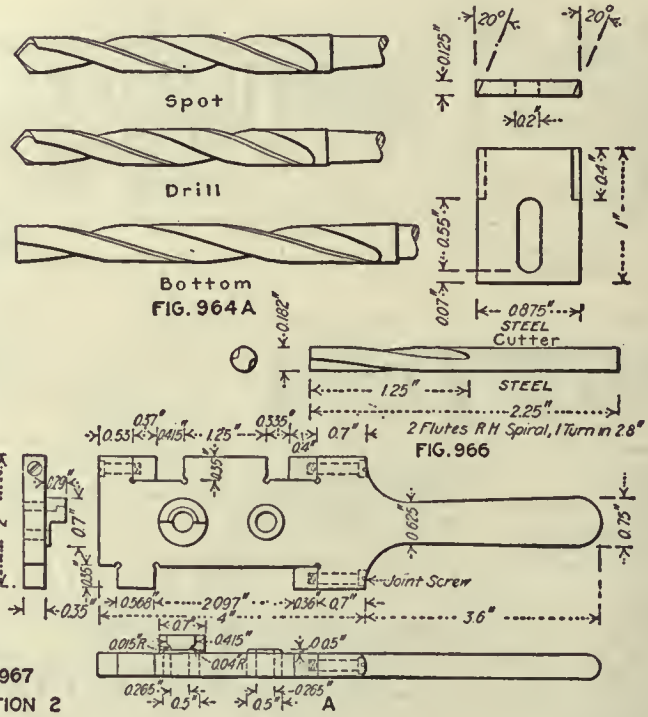

FIG. 964A

OPERATION 2

OPERATION 2. SQUARING AND DRILLING REAR END IN HAND SCREW MACHINE

Transformation—Fig. 964; machining diagram, Fig. 964-A. Machine Used—Hand screw machine, Fig. 965. Number of Operators per Machine—One. Work-Holding Devices—Draw-back chuck. Tool-Holding Devices—Vertical turret. Cutting Tools—Drill and squaring cutter, Fig. 966. Number of Cuts—Three. Cut Data—1,200 r.p.m.; hand feed. Coolant—Cutting oil, ¼-in. stream. Average Life of Tool Between Grindings—800 pieces. Gages—Fig. 967; A, diameter of rear end and length; B, size and depth of hole. Production—85 per hr.

OPERATION 3. PROFILING FOR FIRING-PIN HEAD

Transformation—Fig. 968. Machine Used—Pratt & Whitney No. 1 profiler, Fig. 969. Number of Operators per Machine—One. Work-Holding Devices—Vise jaws grooved to fit, Fig. 970. Tool-Holding Devices—Taper shank. Cutting Tools—End mill, Fig. 971. Number of Cuts—Two. Cut Data—1,200 r.p.m.; hand feed. Coolant—Compound, two ⅛-in. streams. Average Life of Tool Between Grindings—3,000 pieces. Gages—Fig. 972; A, length from point to bottom of recess; B, depth and outline of recess; C, length from bottom of recess to point. Production—45 per hr.

OPERATION 4. FILING, GENERAL CORNERING

Number of Operators—One. Description of Operation—Filing, cornering and generally brushing up. Apparatus and Equipment Used—File. Production—85 per hr.

OPERATION 5. TEMPERING AND HARDENING

Number of Operators—One. Description of Operation—Point of striker is heated in an open fire to 1,450 deg. F., then quenched in water; it is drawn in lead bath to 900 deg. F. Apparatus and Equipment Used—Oil-burning furnace and lead bath.

OPERATION 6. FINISHING POINT IN LATHE

Number of Operators—One. Description of Operation—Polishing end in lathe with emery cloth. Apparatus and Equipment Used—Bench lathe and emery cloth. Production—800 per hr.

Mainspring

The mainspring, as shown in detail in Fig. 973, is made of 0.049-in. steel music wire, wound on a special machine, the ends ground flat, compressed for a certain period and then tested. The mainspring consists of 33½ coils with a pitch of 6 turns per inch, the wire being 0.049 in. in diameter. The spring is wound to a length of 5.583 in. and acquires a set of something more than an inch. It must sustain a load of 16 to 19 lb. at its cocked length, which is 1.825 in.

The special coiling machine used on this work has a very ingenious automatic cut-off. When the spring has been wound to a length of 33½ coils, the outer end makes a contact which energizes an electromagnet and in so doing, liberates a knife that cuts off the spring to the correct length.

OPERATIONS ON THE MAINSPRING

Operation	
1	Coiling
2	Finishing

OPERATION 1. COILING

Machine Used—Special winding machine. Number of Operators per Machine—One. Work-Holding Devices—Wire wound between rolls A, Fig. 974, makes contact at B; this operates electromagnet C, which moves a cutoff knife at D and cuts spring to proper length of 33½ turns. Cut Data—50 r.p.m. Production—500 per hr., coiled and finished.

OPERATION 2. FINISHING

Number of Operators—One. Description of Operation—Springs are placed on a rod, Fig. 975, which will hold 22 springs compressed (with washers between) so the coils touch, so as to set the springs, which are allowed to remain for 48 hr.; before assembling the lock mechanism each spring is tested in the bench machine, shown in Fig. 976; the spring is slipped over a rod at A and compressed by means of a handle B; a pointer at C shows the pull on the spring; the allowable limits are from 16 to 19 lb.

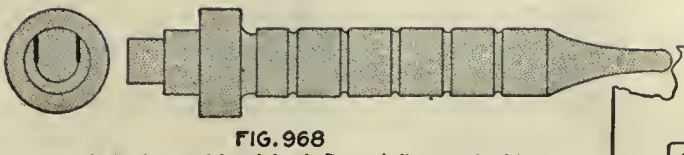

FIG. 968

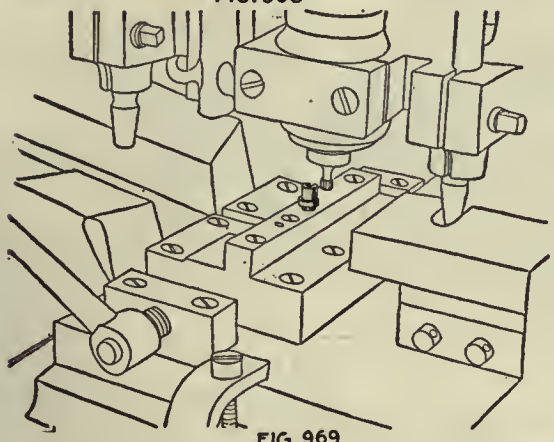

FIG. 969

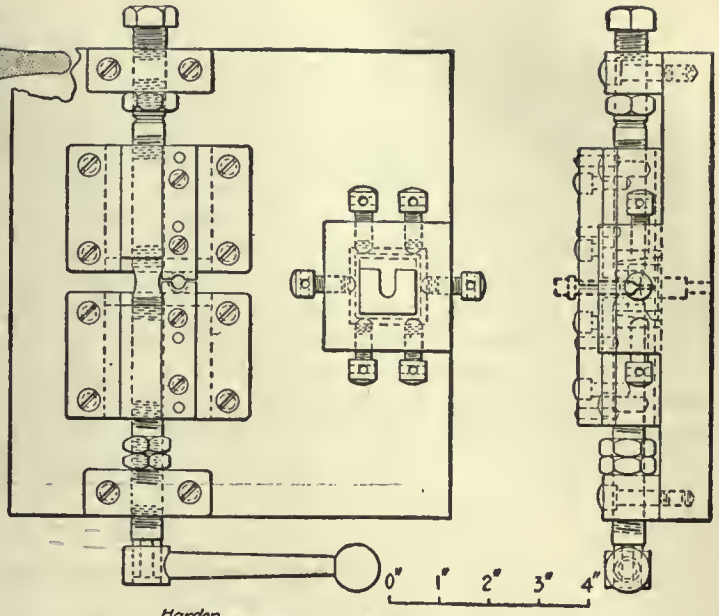

FIG. 970

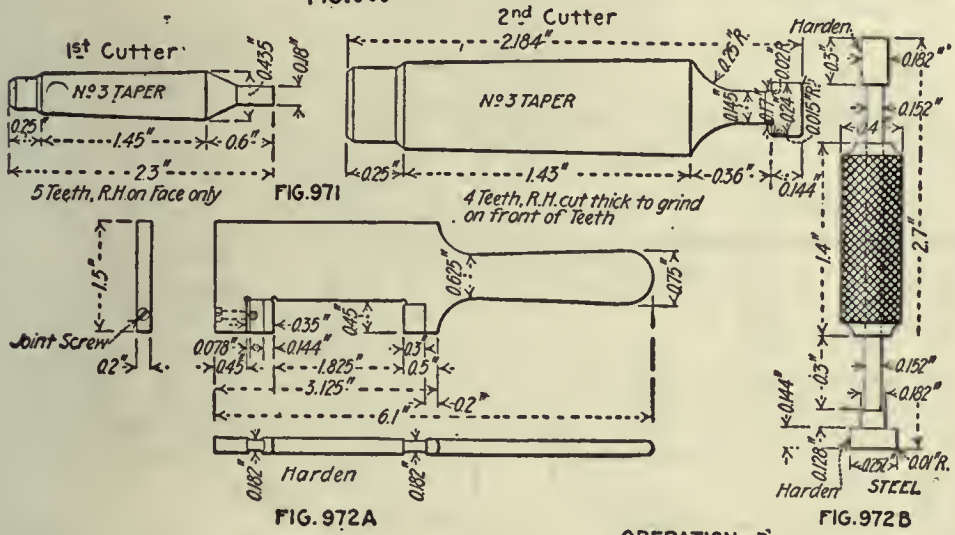

FIG. 971

FIG. 972A

FIG. 972B

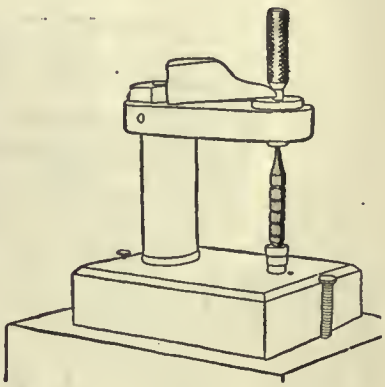

972C

OPERATION 3

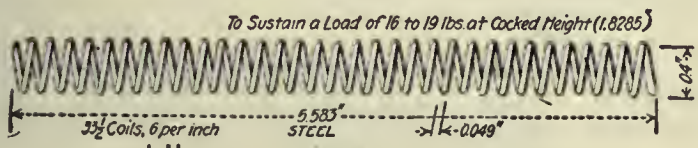

FIG. 973

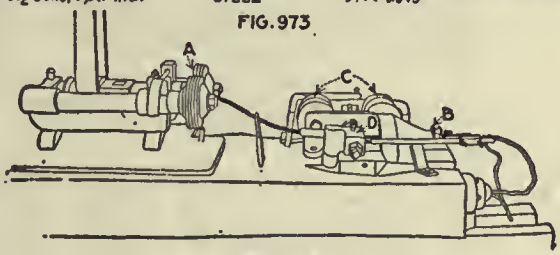

FIG. 974

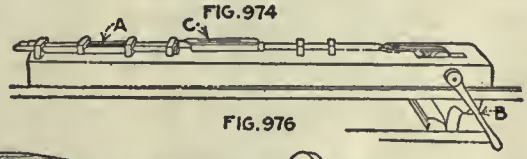

FIG. 976

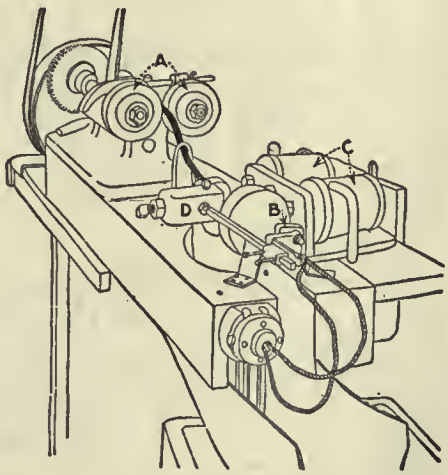

FIG. 974A

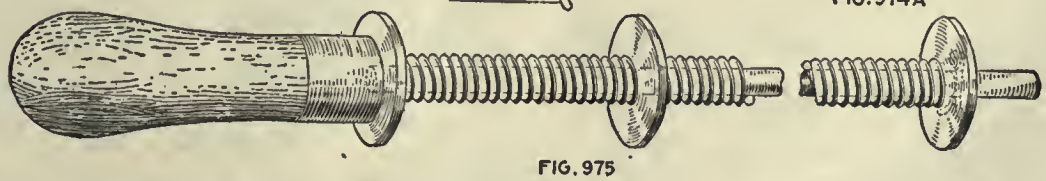

FIG. 975
OPERATION 3

The Extractor

The extractor, as shown in detail in Fig. 977, is made of Class B steel, 0.33 in. square. This steel must take a spring temper. The material is almost entirely cut away by various milling operations. The hook *A* extracts the cartridge case from the rifle after firing. The tongue *B* rides in the extractor groove in the end of the bolt and prevents any movement of the extractor. The lugs *C* are undercut to receive the ears of the extractor collar. The hole *D* is for the escape of gas after firing, while *E* is a backrest curved to fit against the bolt body.

This is a very particular piece of work as unless the front end grips the cartridge flange properly the shell will not be extracted and the rifle becomes inoperative. The piece is of a difficult shape to hold, which makes the special fixtures used of even greater interest than usual.

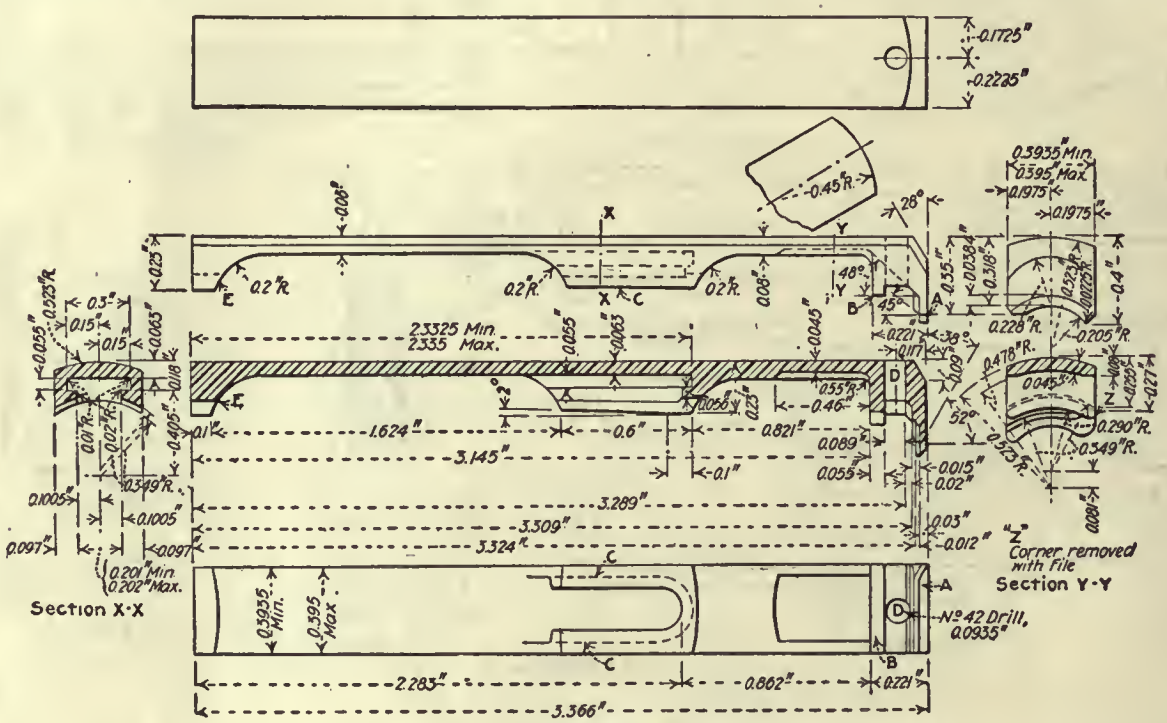

FORGED STEEL
FIG. 977

OPERATIONS ON EXTRACTOR

Operation	
A	Forging from bar
B	Annealing
B-1	Pickling
C	Trimming
D	Cold dropping
1	Milling bottom edge
3	Milling top edge
AA	Removing burrs left by operation 3
4	Milling left side and front end to finish (4 and BB grouped)
BB	Removing burrs left by operation 4
17	Milling right side to finish
17½	Straightening
5	Hand-milling circle over lug slot and rear end, roughing (group 5 and 6½)
6½	Hand-milling circle over lug slot and rear end to finish
6	Hand-milling circle over lug slot on angle (group 6 and CC)
CC	Removing burrs left by operation 6½
7	Drilling gas hole
DD	Removing burrs left by operation 7
7½	Straightening
11 & 12	Hand-milling clearance on hook and rear of hook
13	Hand-milling slot for bolt
14	Hand-milling head space, rear of hook
15	Hand-milling clearance for bolt lug
EE	Removing burrs left by operations 13 and 14
18	Hand-milling bevel on hook
15½	Straightening
16	Jig-milling hook and bevels, front end
19	Profiling corners of hook
8	Hand-milling lug slot, rough
9	Profiling lug slot to finish (group 9 and FF)
FF	Removing burrs left by operation 9
10	Profiling lug slot, undercut
26	Reaming gas hole, in lathe (26 and 28 grouped)
27	Filing, general cornering
28	Bending for tension
29	Hardening and tempering
30	Straightening to correct tempering
31	Polishing outer surface
32	Browning

OPERATION A. FORGING FROM BAR

Transformation—Fig. 978. Number of Operators—One. Description of Operation—Forging from bar. Apparatus and Equipment Used—Billings & Spencer 400-lb. hammer. Production—120 per hr.

OPERATION B. ANNEALING

Number of Operators—One. Description of Operation—Placed in iron pots packed with powdered charcoal; left over night to cool. Apparatus and Equipment Used—Brown & Sharpe annealing furnaces; oil burners.

OPERATION B-1. PICKLING

Number of Operators—One. Description of Operation—Pickling scale from neck. Apparatus and Equipment Used—Wood tanks, wire baskets and pulley block; time, 10 to 12 min.

OPERATION C. TRIMMING

Machine Used—Bliss three-stroke. Number of Operators per Machine—One. Punches and Punch Holders—Square shank. Dies and Die Holders—Held in shoe by setscrew. Stripping Mechanism—Pushed down through die. Average Life of Punches and Dies—20,000 pieces. Lubricant—None. Production—600 per hr.

OPERATION D. COLD DROPPING

Number of Operators—One. Description of Operation—Cold dropping to straighten after trimming. Apparatus and Equipment Used—Billings & Spencer 400-lb. hammer. Production—800 per hr.

OPERATION 1. MILLING BOTTOM EDGE

Transformation—Fig. 978. Machine Used—Pratt & Whitney No. 2 Lincoln miller. Number of Operators per Machine—One. Work-Holding Devices—Vise jaws, Fig. 980; details in Fig. 981. Tool-Holding Devices—Standard arbor. Cutting Tools—Two side-milling cutters and two spiral mills, Fig. 982. Number of Cuts—One. Cut Data—60 r.p.m.; ⅝-in. feed. Coolant—Cutting oil, put on with brush. Average Life of Tool Between Grindings—2,500 pieces. Gages—None. Production—35 per hr.

OPERATION 3. MILLING TOP EDGE

Transformation—Fig. 979. Machine Used—Pratt & Whitney No. 2 Lincoln miller. Number of Operators per Machine—One. Work-Holding Devices—Vise jaws, Fig. 980; details in Fig. 981. Tool-Holding Devices—Standard arbor. Cutting Tools—Two side-milling cutters, and two spiral mills, Fig. 982. Number of Cuts—One. Cut Data—60 r.p.m.; ⅝-in. feed. Coolant—Cutting oil, put on with brush. Average Life of Tool Between Grindings—2,500 pieces. Gages—Fig. 982. Production—30 per hr.

OPERATION AA. REMOVING BURRS LEFT BY OPERATIONS 1 AND 3

Number of Operators—One. Description of Operation—Removing burrs thrown up by operation 3. Apparatus and Equipment Used—File.

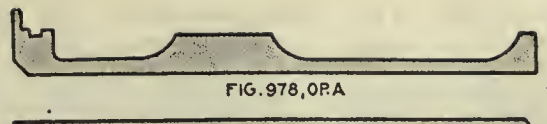

FIG. 978, OP. A

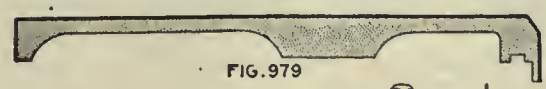

FIG. 979

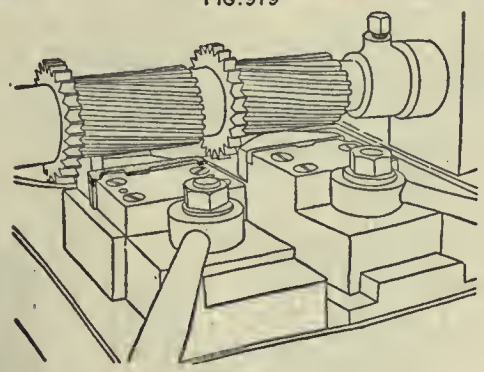

FIG. 980

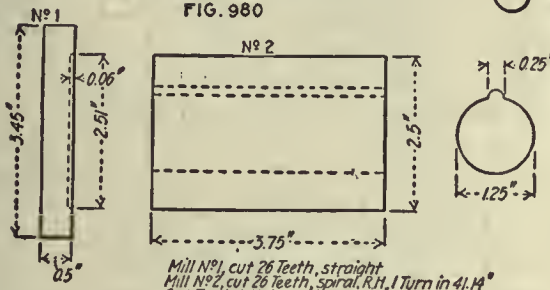

FIG. 982

OPERATION 1

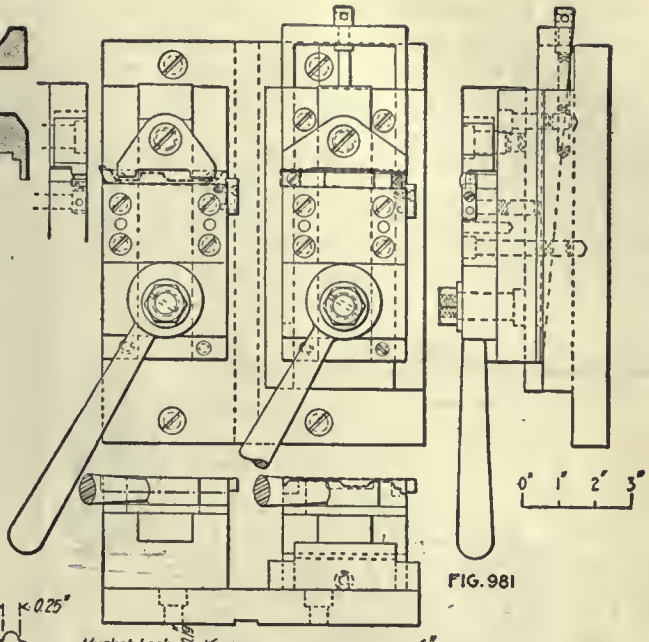

FIG. 981

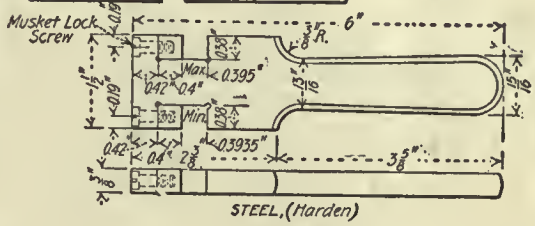

FIG. 983, OP. 3

OPERATION 4. MILLING LEFT SIDE AND FRONT END TO FINISH

Transformation—Fig. 984. Machine Used—Pratt & Whitney No. 2 Lincoln miller. Number of Operators per Machine—One. Work-Holding Devices—Vise jaws against stop, Fig. 985. Tool-Holding Devices—Standard arbor. Cutting Tools—Gang miller, Fig. 986. Number of Cuts—One. Coolant—Compound. Average Life of Tool Between Grindings—3,500 pieces. Gages—Fig. 987; A, length; B, contour and thickness of ends. Note—Grouped with operations 1, 3 and 17.

OPERATION BB. REMOVING BURRS LEFT BY OPERATION 4

Number of Operators—One. Description of Operation—Removing burrs thrown up by operation 4. Apparatus and Equipment Used—File. Production—Grouped with operation 17.

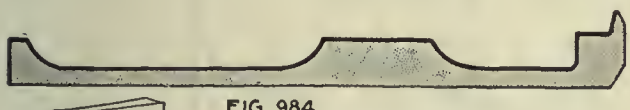

FIG. 984

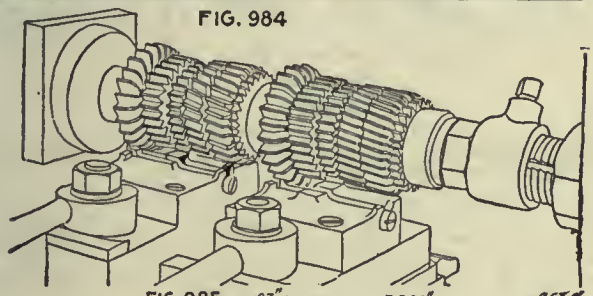

FIG. 985

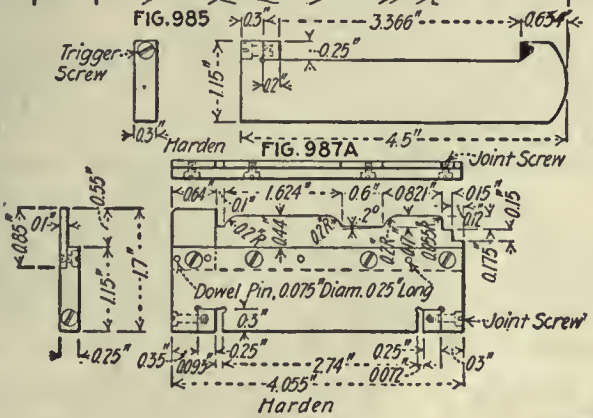

FIG. 987 B

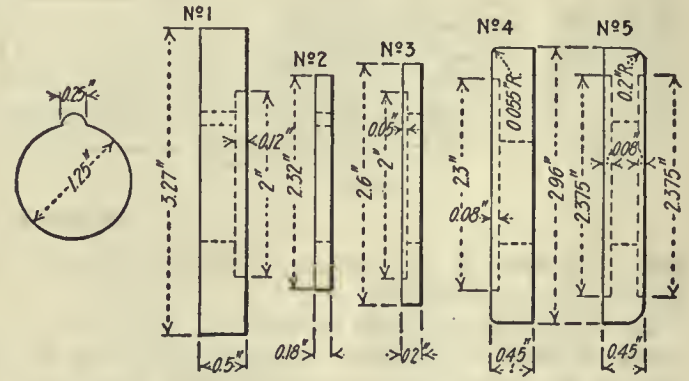

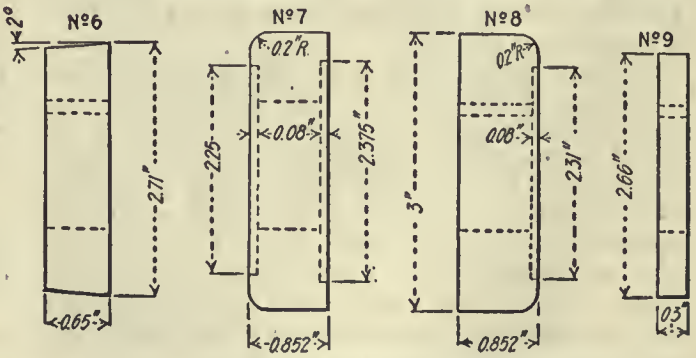

Mills 1, 2, 3, 4, 5, 6 & 9, cut 26 Teeth, straight, L.H.
Mills 7 & 8, cut 26 Teeth L.H., spiral, 1 Turn in 41.14" R.H.
18 Mills in Set.

FIG. 986

OPERATION 4

The extractor, in common with many other parts of the rifle, is machined in pairs in many of its operations. In some of these the work is done in exact duplicate while in others the work is done on different parts. The profiling, both for forming the front end so as to insure its always gripping the flange of the cartridge, and for the undercutting of the flanges which receive the ears of the extractor collar, is an extremely particular operation. The undercutting is especially fussy owing to the slot or undercut being only 0.056 in. deep, and it is rather a difficult operation, as the cutters are delicate and must be handled very carefully.

The use of a profiling form for this work affords a suggestion to builders of various machines requiring small and delicate T-slots for any purpose. The usual way of milling is not so satisfactory where the slot is to be at all accurate.

The piece is finished all over, some fairly heavy cuts being taken as can be seen in Figs. 980 and 985 where gangs of milling cutters are used in both cases. In the latter case especially the cut is quite heavy, involving as it does the use of nine cutters in each gang. This makes the fixtures which hold such a slight piece against the stresses of a cut of this size, of particular interest. Needless to say the piece must be bedded firmly in the fixture as well as being securely clamped by the jaws; these are cam controlled as is usual in the fixtures used in the armory.

The gaging of this piece is also of interest as there are many points bearing various relations to each other, which must be kept within close limits. The gages and methods are shown with each operation. Many of these have a central stem which represents the body of the bolt. The piece fits against this and the various points are gaged with relation to the fit on the central stems.

OPERATION 17. MILLING RIGHT SIDE TO FINISH

Transformation—Fig. 988. Machine Used—Pratt & Whitney No. 2 Lincoln miller. Number of Operators per Machine—One. Work-Holding Devices—Pushed to stop, clamped with vise jaws, Fig. 989. Tool-Holding Devices—Standard arbor. Cutting Tools—Milling cutters, Fig. 990. Number of Cuts—One. Cut Data—60 r.p.m.; ⅝-in. feed. Coolant—Compound, two ¼-in. streams. Average Life of Tool Between Grindings—3,000 pieces. Gages—Fig. 991; thickness, contour of front. Production—150 per hr.

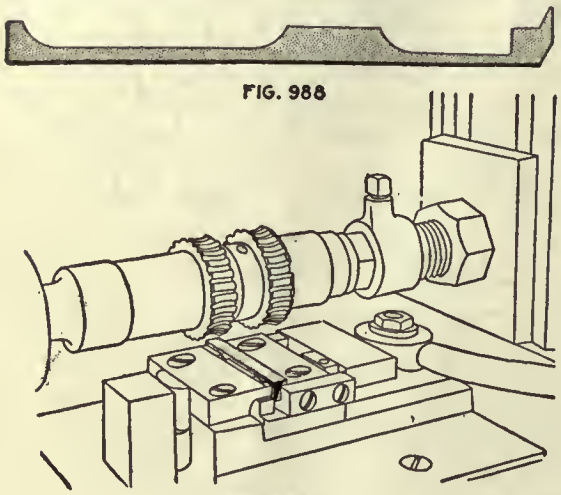

FIG. 988

FIG. 989

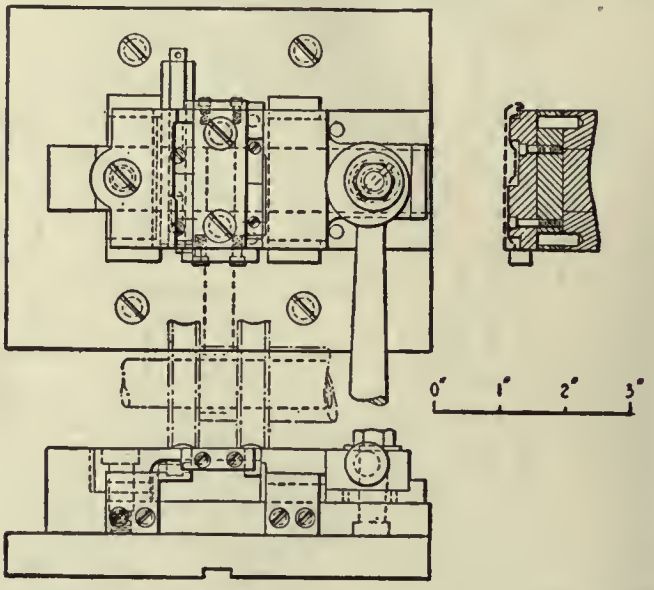

FIG. 989A

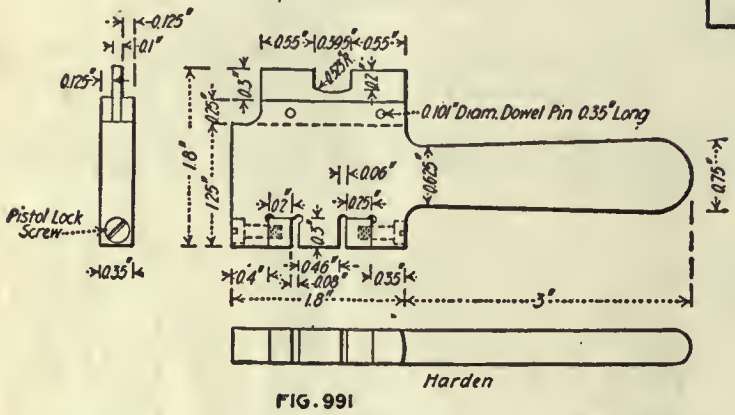

FIG. 991

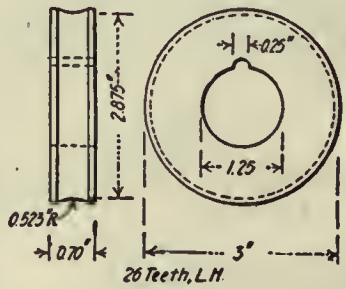

FIG. 990

OPERATION 17

OPERATION 17½. STRAIGHTENING

Number of Operators—One. Description of Operation—Taking out kinks. Apparatus and Equipment Used—Lead block, straight-edge and hammer. Production—175 per hr.

OPERATION 5. HAND-MILLING CIRCLE OVER LUG SLOT AND REAR END, ROUGHING

Transformation—Fig. 992. Machine Used—Whitney hand miller, Fig. 993. Number of Operators per Machine—One. Work-Holding Devices—Vise jaws, Fig. 994. Tool-Holding Devices—Taper shank. Cutting Tools—Milling cutter, Fig. 995. Number of Cuts—One. Cut Data—320 r.p.m.; hand feed. Coolant—Cutting oil, put on with brush. Average Life of Tool Between Grindings—1,000 pieces. Production—80 per hr.

OPERATION 6½. HAND-MILLING CIRCLE OVER LUG SLOT AND REAR END TO FINISH

Transformation—Same as Fig. 992. Machine Used—Whitney hand miller. Number of Operators per Machine—One. Work-Holding Devices—Vise jaws, same as Figs. 993 and 994. Tool-Holding Devices—Taper shank. Cutting Tools—Milling cutter, same as Fig. 995. Cut Data—320 r.p.m.; hand feed. Coolant—Cutting oil, put on with brush. Average Life of Tool Between Grindings—1,000 pieces. Gages—Fig. 996; A, thickness of lug slot; B, contour. Production—80 per hr.

OPERATION 6. HAND-MILLING CIRCLE OVER LUG SLOT ON ANGLE

Transformation—Fig. 997. Machine Used—Whitney hand miller. Number of Operators per Machine—One. Work-Holding Devices—Vise jaws, same as Fig. 994, except work is held at proper angle. Tool-Holding Devices—Taper shank.

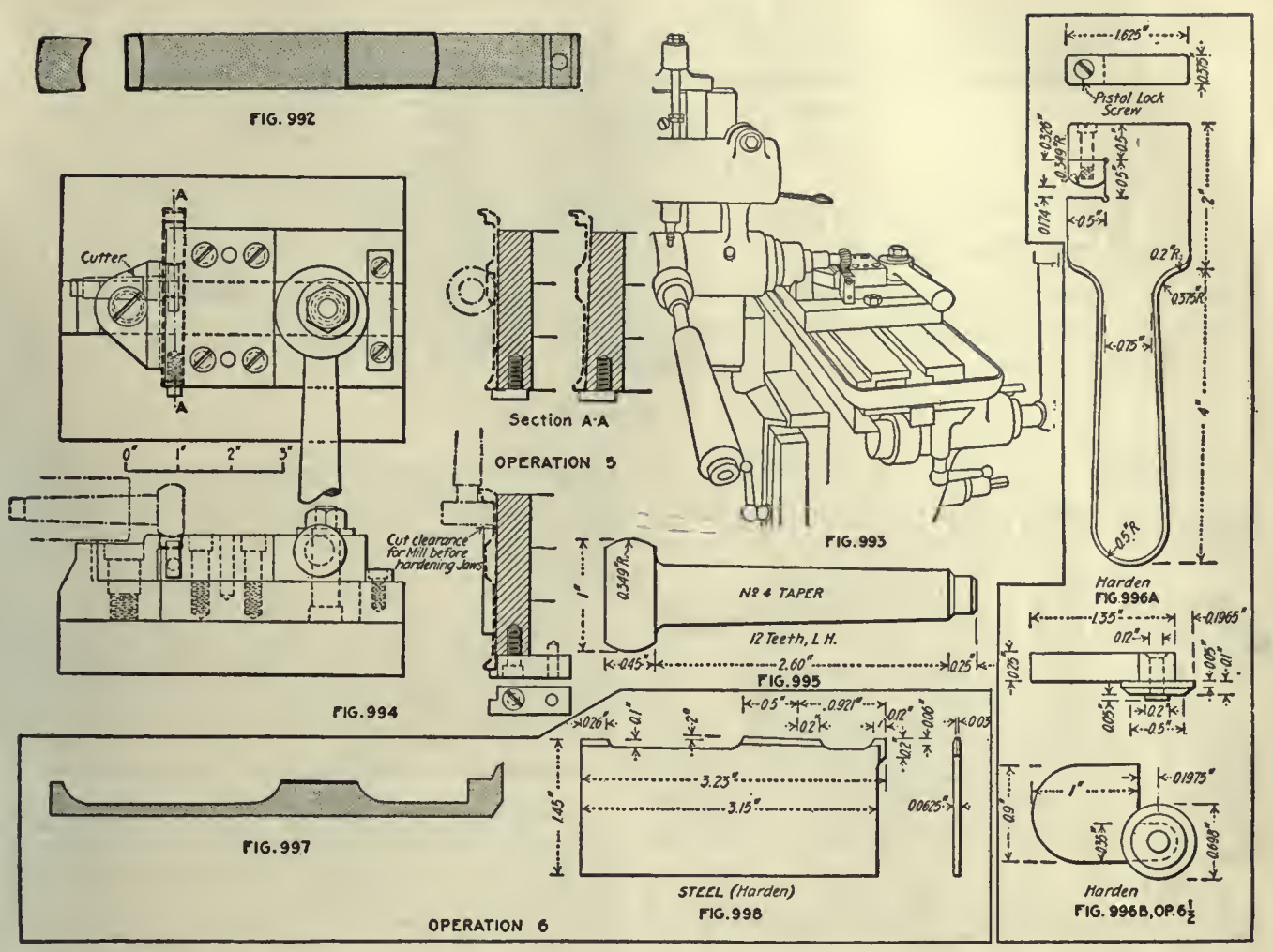

Cutting Tools—Same as Fig. 995. Number of Cuts—One. Cut Data—420 r.p.m.; hand feed. Coolant—None. Average Life of Tool Between Grindings—20,000 pieces. Gages—Fig. 998, contour. Production—200 per hr.

OPERATION CC. REMOVING BURRS LEFT BY OPERATION 6½

Number of Operators—One. Description of Operation—Removing burrs thrown up by operation 6½. Apparatus and Equipment Used—File. Production—Grouped with operation 6.

OPERATION 7. DRILLING GAS HOLE

Transformation—Fig. 999. Machine Used—Woodard & Rogers single-spindle drilling machine. Number of Operators per Machine—One. Work-Holding Devices—Drill jig, Figs. 1000 and 1001. Tool-Holding Devices—Drill chuck. Cutting Tools—Twist drill. Number of Cuts—One. Cut Data—900 r.p.m.; hand feed. Coolant—Cutting oil, ⅛-in. stream. Average Life of Tool Between Grindings—250 pieces. Gages—Fig. 1002. Production—120 per hr. Note—This hole is drilled for the escape of gas generated or liberated at the firing of the cartridge.

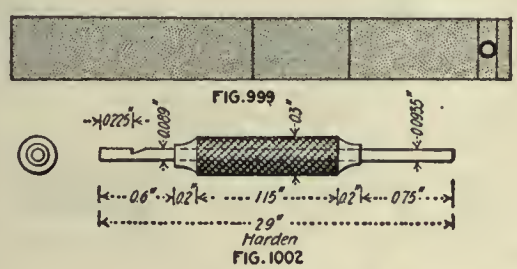

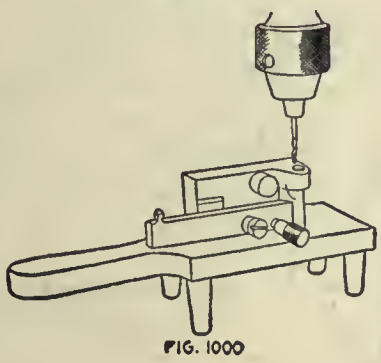

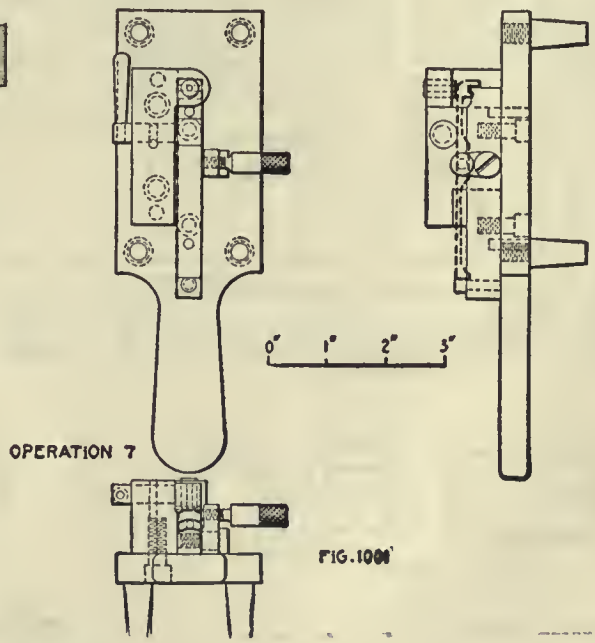

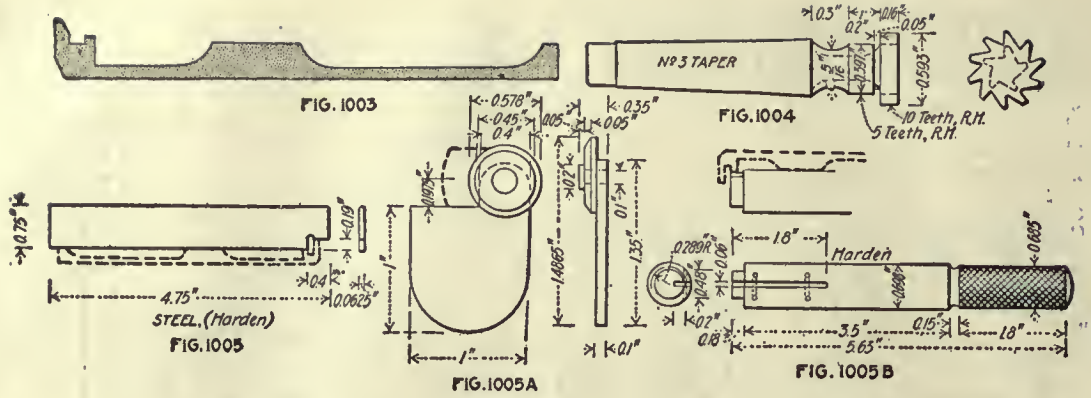

OPERATION 11 & 12

OPERATION DD. REMOVING BURRS LEFT BY OPERATION 7

Number of Operators—One. Description of Operation—Removing burrs thrown up by operation 7. Apparatus and Equipment Used—File. Production—Grouped with operation 7½.

OPERATION 7½. STRAIGHTENING

Number of Operators—One. Description of Operation—Straightening for finishing operation. Apparatus and Equipment Used—Lead block, straight-edge and hammer. Production—170 per hr.

OPERATIONS 11 AND 12. HAND-MILLING CLEARANCE ON HOOK AND REAR OF HOOK

Transformation—Fig. 1003. Machine Used—Whitney hand miller. Number of Operators per Machine—One. Work-Holding Devices—Same fixture as Figs. 993 and 994, with change of cutter; held in vise jaw. Tool-Holding Devices—Taper shank. Cutting Tools—Miller cutters, Fig. 1004. Number of Cuts—One. Cut Data—360 r.p.m.; hand feed. Coolant—Cutting oil, put on with brush. Average Life of Tool Between Grindings—10,000 pieces. Gages—Fig. 1005; A, location from side; B, lining up with extractor lug and rear end. Production—175 per hr.

OPERATION 13. HAND-MILLING SLOT FOR BOLT

Transformation—Fig. 1006. Machine Used—Whitney hand miller. Number of Operators per Machine—One. Work-Holding Devices—Vise jaws; same fixture as Figs. 993 and 994, with change of cutters. Tool-Holding Devices—Taper shank. Cutting Tools—Milling cutter, Fig. 1007. Number of Cuts—One. Cut Data—360 r.p.m.; hand feed. Coolant—Cutting oil, put on with brush. Average Life of Tool Between Grindings—10,000 pieces. Gages—Fig. 1008; A, thickness of hook; B, location of slot from back end; C, relation to extractor lugs. Production—175 per hr.

OPERATION 14. HAND-MILLING HEAD SPACE, REAR OF HOOK

Transformation—Fig. 1009. Machine Used—Whitney hand miller. Number of Operators per Machine—One. Work-Holding Devices—Vise jaws; same fixture as Figs. 993 and 994, with change of cutter. Tool-Holding Devices—Taper shank. Cutting Tools—Milling cutter, Fig. 1010. Number of Cuts—One. Cut Data—360 r.p.m.; hand feed. Coolant—Cutting oil, put on with brush. Average Life of Tool Between Grindings—10,000 pieces. Gages—Fig. 1011. Production—175 per hr.

OPERATION 15. HAND-MILLING CLEARANCE FOR BOLT LUG

Transformation—Fig. 1012. Machine Used—Whitney hand miller. Number of Operators per Machine—One. Work-Holding Devices—Vise jaws; same fixture as Figs. 993 and 994, with change of cutter. Tool-Holding Devices—Taper shank. Cutting Tools—Milling cutter, Fig. 1013. Number of Cuts—One. Cut Data—360 r.p.m.; hand feed. Coolant—Cutting oil, put on with brush. Average Life of Tool Between Grindings—10,000 pieces. Gages—Fig. 1014, radius of clearance. Production—175 per hr.

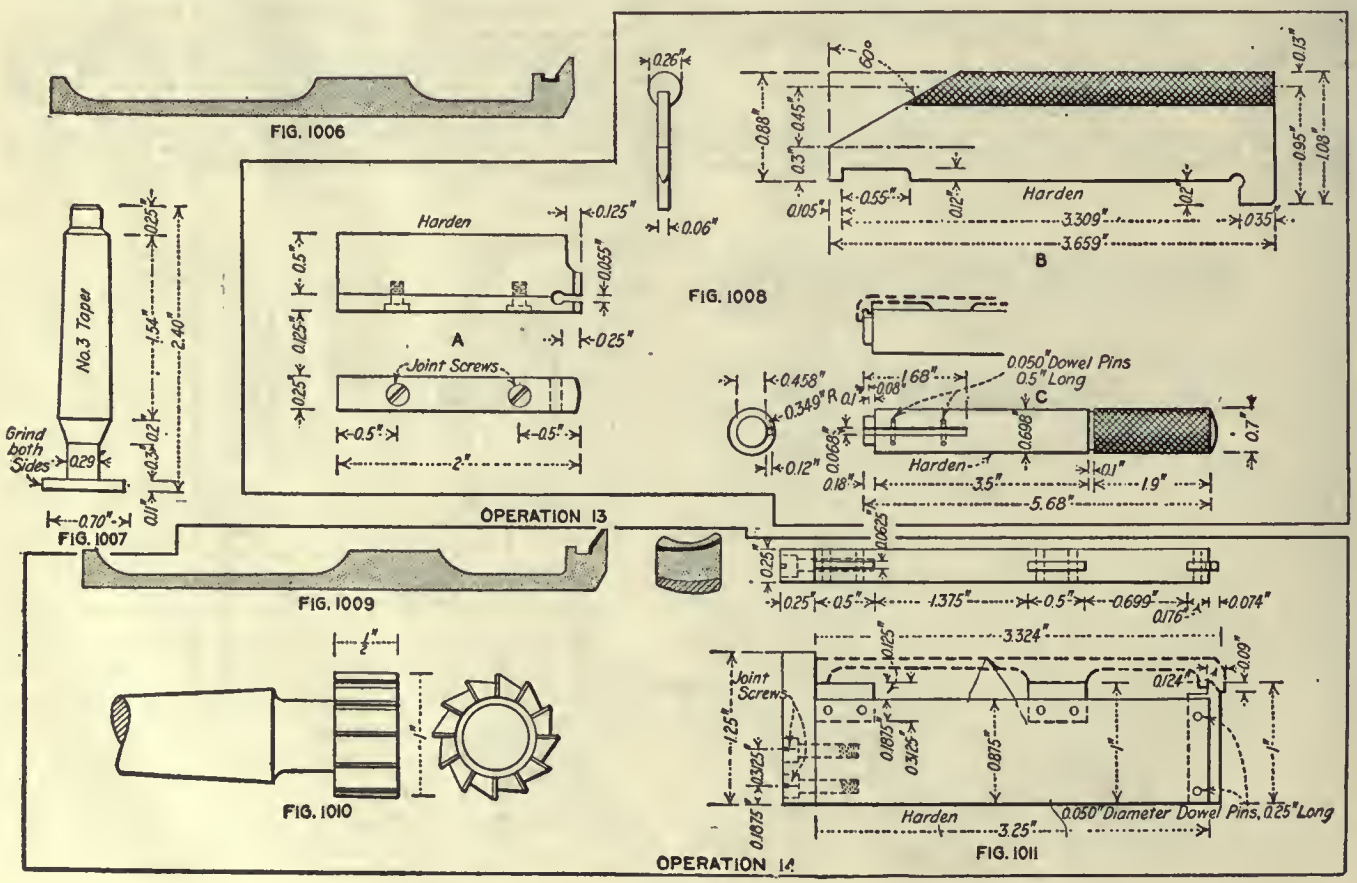

OPERATION EE. REMOVING BURRS LEFT BY OPERATIONS 13 AND 14

Number of Operators—One. Description of Operation—Removing burrs thrown up by operations 13 and 14. Apparatus and Equipment Used—File. Production—Grouped with operation 15.

OPERATION 18. HAND-MILLING BEVEL ON HOOK

Transformation—Fig. 1015. Machine Used—Garvin No. 3 hand miller. Number of Operators per machine—One. Work-Holding Devices—Clamped to form at proper angle, Fig. 1016; details in Fig. 1017; work held against A by shoe B and cam C. Tool-Holding Devices—Taper shank. Cutting Tools—Milling cutter, Fig. 1018. Number of Cuts—One. Cut Data—320 r.p.m.; hand feed. Coolant—Cutting oil, put on with brush. Average Life of Tool Between Grindings—5,000 pieces. Gages—Fig. 1019, relation of bevel to back and end. Production—400 per hr.

OPERATION 15½. STRAIGHTENING

Number of Operators—One. Description of Operation—Same as operation 17½. Apparatus and Equipment Used—Same as operation 17½. Production—Same as operation 17½.

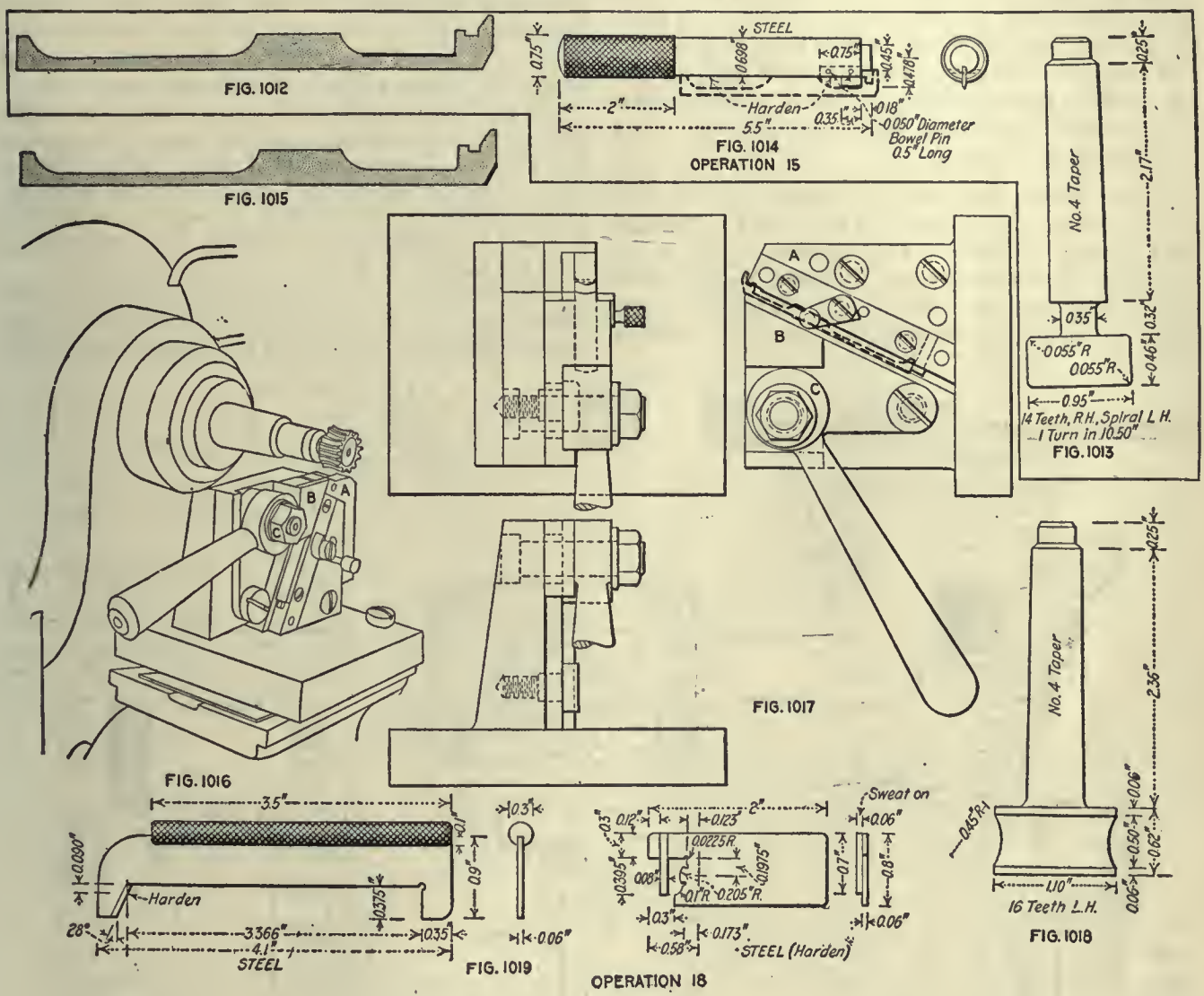

So much depends on the proper functioning of this extractor that it is highly important that it be correct in every particular. This being the case, a careful study of the fixtures which have been found satisfactory as well as the methods of making the different cuts and of gaging them after they are made, will reveal many points of interest and value.

This can perhaps be best accomplished by first studying the details of the piece itself and then carefully following the various operations. The vise jaws have to be very carefully made to avoid cocking up when the piece is clamped. This is very necessary as the piece is very thin where it is clamped by the jaws, yet it must be very firmly held to resist the thrust of gang of formed milling cutters which machine the whole upper surface at one pass through the machine.

It will be noted that the cam clamped fixture is used almost exclusively in this kind of work and also that the hand milling machine plays an important part in the smaller machining operations. Examples of this can be seen in Figs. 980, 985, 989, 994, 1016 and in the operations which follow. Some of these hold the extractor one way and some another, and each case may have a special feature well worth examination. In each case, however, the object is to locate the extractor with reference to its fit on the body of the bolt.

The long, thin shape of the extractor makes it a difficult piece to hold as the sides are quite narrow and do not give a good surface for gripping in the special vise jaws provided. The difficulty is overcome, however, by so designing the jigs and holding fixtures that the piece is held in place against proper supports which prevent springing or side slipping. Being so held, with reference to the portion of the extractor which bears against the bolt body, the machining is done accurately and rapidly and the various operations are performed in their proper sequence.

A good example of one of these operations is seen in Fig. 1021 where the extractor is being held while the upper end is beveled with the cutter shown. Then come the milling and profiling, in Figs. 1030, 1034 and 1039, thus completing the recess for the ears of the extractor collar. The thread transformation, Figs. 1029, 1033 and 1038, shows just how this undercutting is worked out.

The position of this slot with relation to the fit on the bolt body is very neatly measured by means of the gage in Fig. 1041-A. Here the button *A*, which fits into the slot easily, is controlled by the micrometer screw with the graduated dial *B*. Moving this screw measures the bottom and top of the slot, the readings being easily taken from the position of the pointer against the dial.

The width and thickness of the slot are gaged by the two button gages shown in Fig. 1041-B, the larger-diameter button being the thinner and the thick button the smallest.

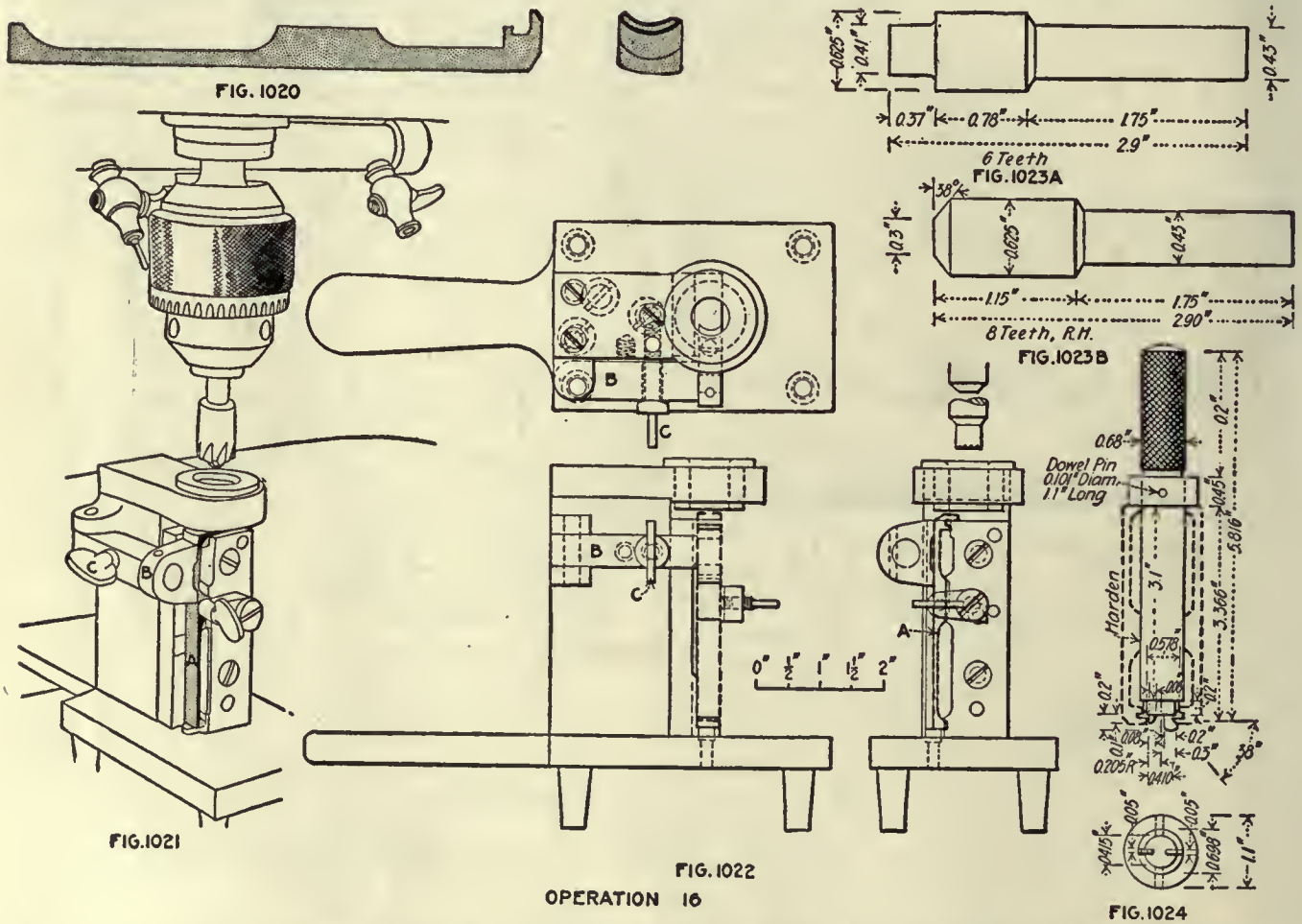

FIG. 1020

FIG. 1021

FIG. 1022

FIG. 1023A

FIG. 1023B

FIG. 1024

OPERATION 16

OPERATION 16. JIG-MILLING HOOK AND BEVELS, FRONT END

Transformation—Fig. 1020. Machine Used—Dwight-Slate 16-in. three-spindle upright. Number of Operators per Machine—One. Work-Holding Devices—Drill jig, Fig. 1021; details in Fig. 1022; work A is held by clamp B and thumbscrew C. Tool-Holding Devices—Drill chuck. Cutting Tools—Milling cutter, Fig. 1023; A, for hook; B, for front-end bevel. Number of Cuts—Two. Cut Data—250 r.p.m.; hand feed. Coolant—Cutting oil, ¼-in. stream. Average Life of Tool Between Grindings—500 pieces. Gages—Fig. 1024, contour and position. Production—80 per hr.

OPERATION 19. PROFILING CORNERS OF HOOK

Transformation—Fig. 1025. Machine Used—Pratt & Whitney No. 1 profiler. Number of Operators per Machine—One. Work-Holding Devices—Clamped to form upright position, Fig. 1026; details in Fig. 1027. Tool-Holding Devices—Taper shank. Cutting Tools—Milling cutter, Fig. 1028. Number of Cuts—One. Cut Data—1,200 r.p.m.; hand feed. Coolant—Compound, ¼-in. stream. Average Life of Tool Between Grindings—1,500 pieces. Gages—None. Production—400 per hr.

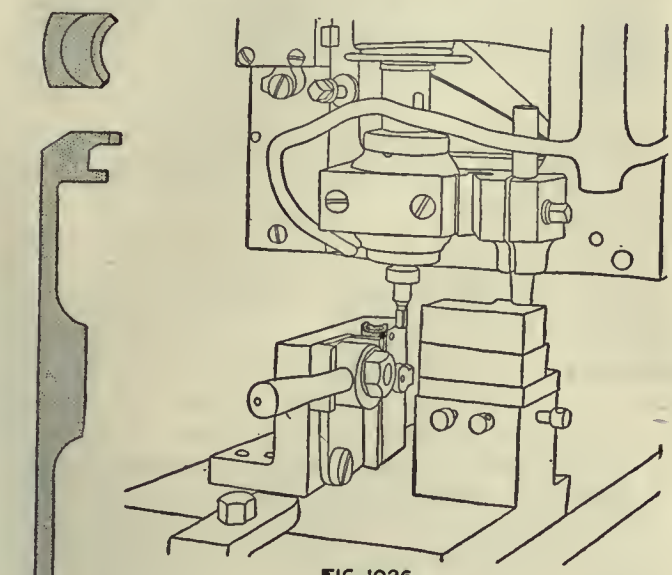

FIG. 1026

FIG. 1025

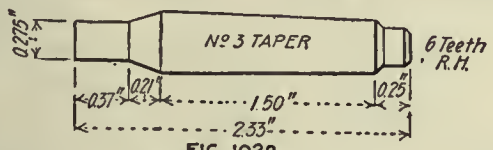

FIG. 1028

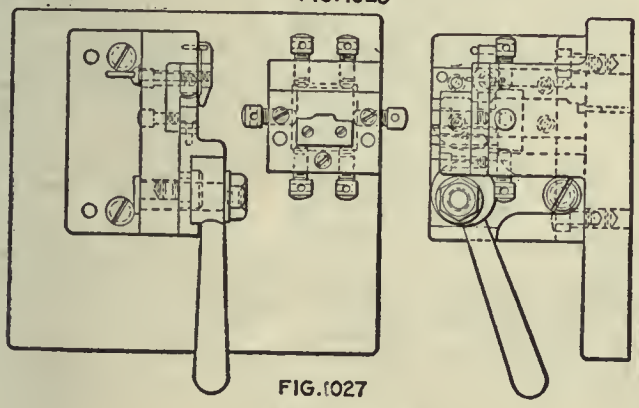

FIG. 1027

OPERATION 19

FIG. 1033

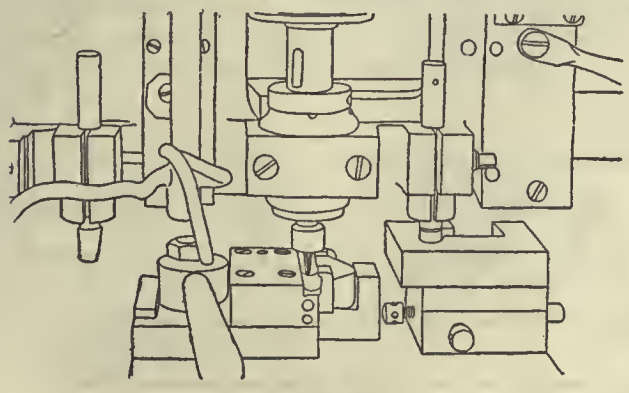

FIG. 1034

FIG. 1029

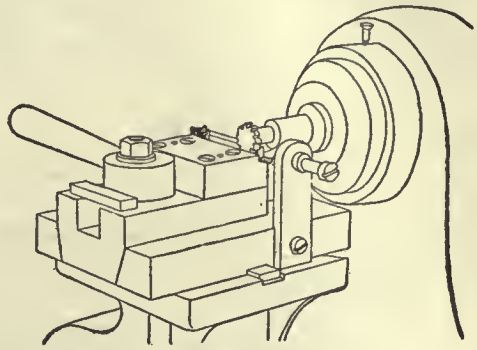

FIG. 1030

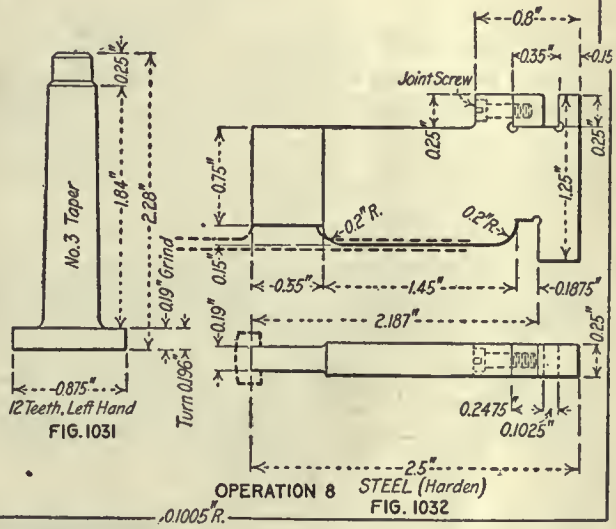

FIG. 1031

OPERATION 8 STEEL (Harden)

FIG. 1032

OPERATION 8. HAND-MILLING LUG SLOT, ROUGH

Transformation—Fig. 1029. Machine Used—Garvin No. 3 hand miller. Number of Operators per Machine—One. Work-Holding Devices—Work pushed to stop, clamped by vise jaws, Fig. 1030. Tool-Holding Devices—Taper shank. Cutting Tools—Milling cutter, Fig. 1031. Number of Cuts—One. Cut Data—450 r.p.m.; hand feed. Coolant—Cutting oil, ⅛-in. stream.

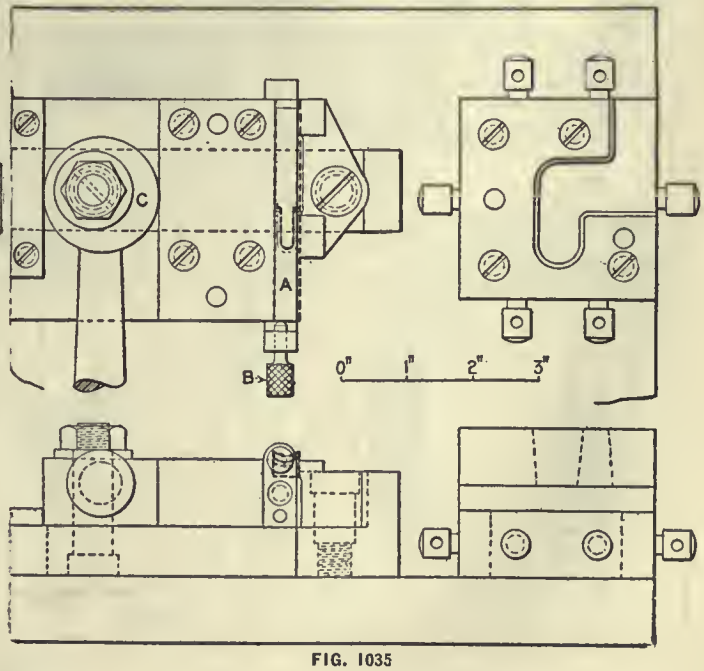

FIG. 1035

Average Life of Tool Between Grindings—2,500 pieces. Gages—Fig. 1032, width of slot. Production—175 per hr.

OPERATION 9. PROFILING LUG SLOT TO FINISH

Transformation—Fig. 1033. Machine Used—Pratt & Whitney No. 1 profiler. Number of Operators per Machine—One. Work-Holding Devices—Work pushed against stop and clamped by vise jaws, Fig. 1034; Fig. 1035 shows details; work A is positioned by screw B and clamped by cam C. Tool-Holding Devices—Taper shank. Cutting Tools—Milling cutter, Fig. 1036. Number of Cuts—Two. Cut Data—1,200 r.p.m.; hand feed. Coolant—Compound, two ¼-in. streams. Average Life of Tool Between Grindings—500 pieces. Gages—Fig. 1037, width and position of slot. Production—50 per hr.

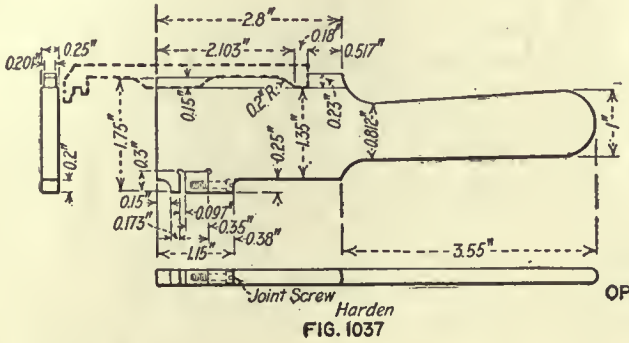

FIG. 1037

OPERATION 9

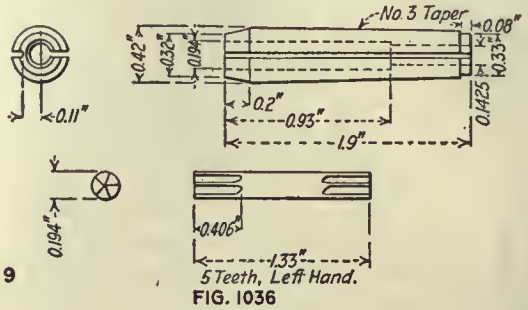

FIG. 1036

OPERATION FF. REMOVING BURRS LEFT BY OPERATION 9

Number of Operators—One. Description of Operation—Removing burrs thrown up by operation 9. Apparatus and Equipment Used—File. Production—Grouped with operation 9.

OPERATION 10. PROFILING LUG SLOT, UNDERCUT

Transformation—Fig. 1038. Machine Used—Pratt & Whitney No. 1 profiler. Number of Operators per Machine—One. Work-Holding Devices—Vise jaws with stop at forward end, Fig. 1039. Tool-Holding Devices—Taper shank. Cutting Tools—Milling cutter, Fig. 1040. Number of Cuts—One. Cut Data—1,200 r.p.m.; hand feed. Coolant—Compound, ¼-in. stream. Average Life of Tool Between Grindings—200 pieces. Gages—Fig. 1041; A, micrometer; point A fits slot; dial B registers against stop C; B, go and not go for slot; C slides in slot. Production—40 per hr.

OPERATION 26. REAMING GAS HOLE

Machine Used—Bench lathe. Number of Operators per Machine—One. Work-Holding Devices—Held in hands. Tool-Holding Devices—Drill chuck. Cutting Tools—Reamer. Gages—None. Production—Grouped with operation 28.

OPERATION 27. FILING, GENERAL CORNERING

Number of Operators—One. Description of Operation—Brushing up and filing of corners. Apparatus and Equipment Used—File. Production—35 per hr.

OPERATION 28. BENDING FOR TENSION

Transformation—Fig. 1042. Number of Operators—One. Description of Operation—Making a little bend for tension. Apparatus and Equipment Used—Special vise. Fig. 1043. Production—350 per hr.

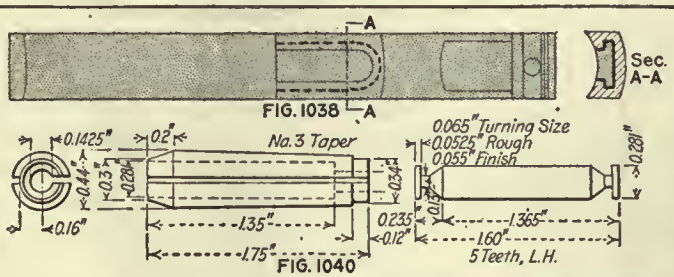

FIG. 1038

FIG. 1040

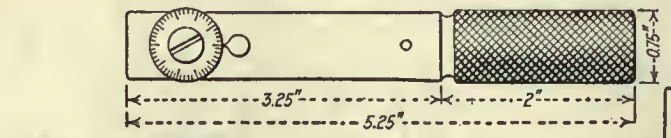

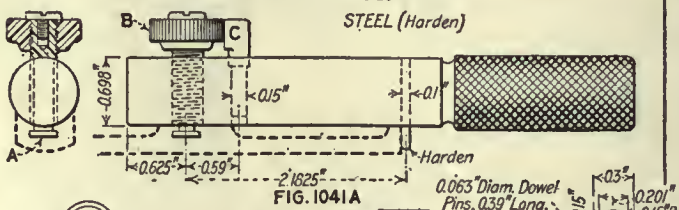

FIG. 1041A

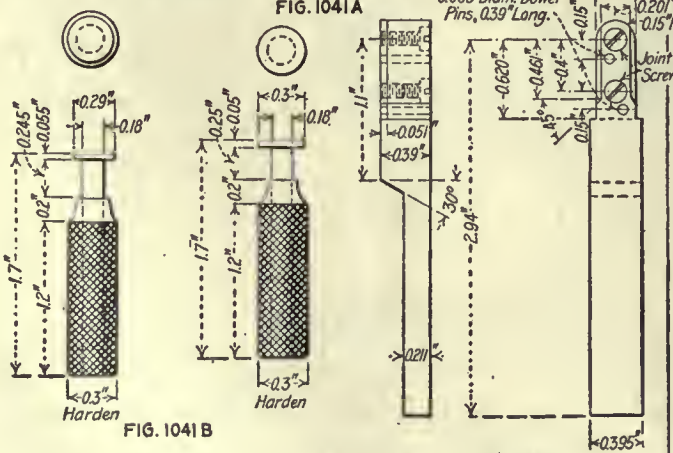

FIG. 1041B

OPERATION 10

FIG. 1041C

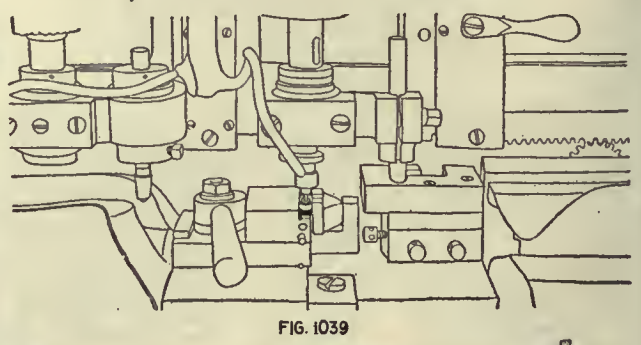

FIG. 1039

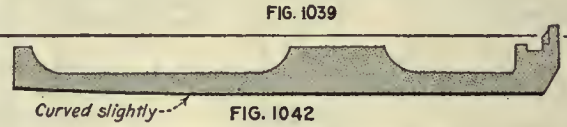

FIG. 1042

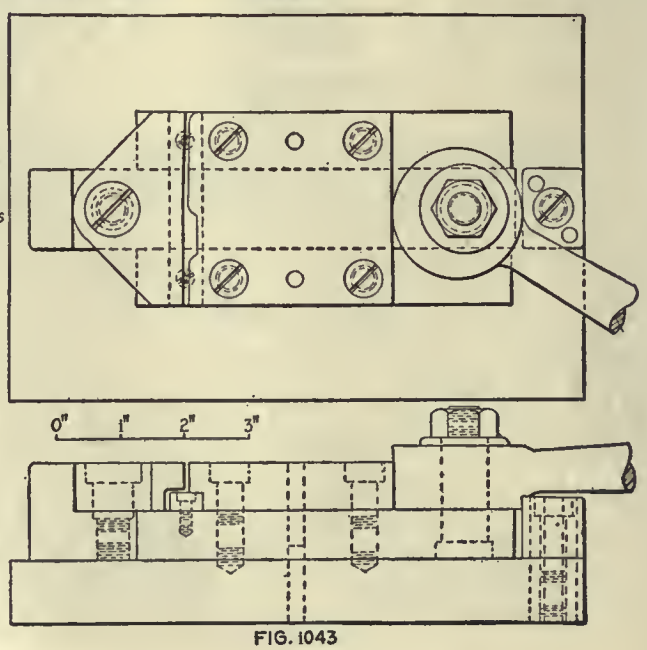

FIG. 1043

OPERATION 29. HARDENING AND TEMPERING

Number of Operators—One. Description of Operation—Heat in open oil fire to 1,450 deg. F.; temper drawn in lead bath to 900 deg. F. Apparatus and Equipment Used—Rockwell oil-burning furnaces, cast-iron pots for lead. Production—100 per hr. per fire.

OPERATION 30. STRAIGHTENING TO CORRECT TEMPERING

Number of Operators—One. Description of Operation—Bent by hand on lead block with brass hammer. Apparatus and Equipment Used—Lead block and brass hammer.

OPERATION 31. POLISHING OUTER SURFACE

Number of Operators—One. Description of Operation—Polishing all outside surfaces. Apparatus and Equipment Used—Polishing jack and wheel. Production—70 per hr.

OPERATION 32. BROWNING

Number of Operators—One. Description of Operation—Brown same as barrels. Apparatus and Equipment Used—Same as for barrels.

Extractor Collar

The extractor collar, shown in detail in Fig. 1044, fits around the bolt body and holds the extractor by means of the ears, permitting the bolt to turn while the extractor is held in its slot in the receiver. It is made of Class D steel 0.40 in. square and is drop-forged in single pieces. It is ground on each side, bored and milled on the outside to fit the bolt body and extractor. It is bent in position on the bolt in bolt operation 54 as was illustrated in Fig. 748. Its small size makes it difficult to hold and the fact that it must be finished all over adds to the difficulties of holding it for machining. This consists mostly of grinding and milling operations, with a liberal amount of burring.

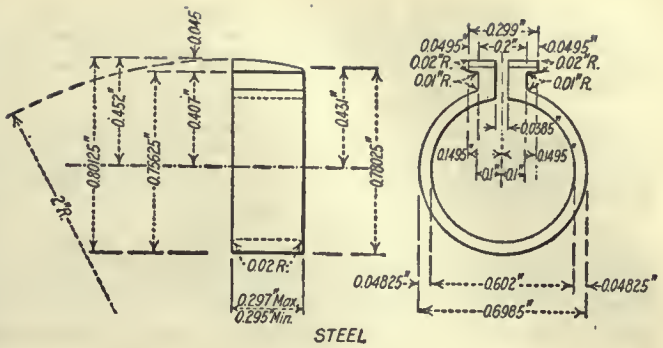

FIG. 1044

OPERATIONS ON THE EXTRACTOR COLLAR

Operation	
A	Forging from bar
B	Annealing
B-1	Pickling
C	Trimming
1	Grinding front and rear ends
2	Drilling and reaming
AA	Countersinking both sides
4	Milling right side
CC	Removing burrs left by operation 4
5	Milling left side (operations 4, CC, 5 and DD are grouped)
DD	Removing burrs left by operation 5
6	Slotting
7	Spreading and filing inner corners of ears
8	Assembling with bolt

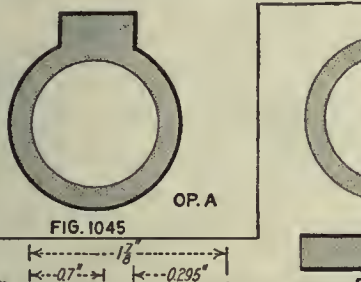

FIG. 1045

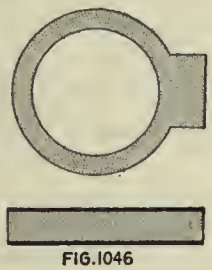

FIG. 1046

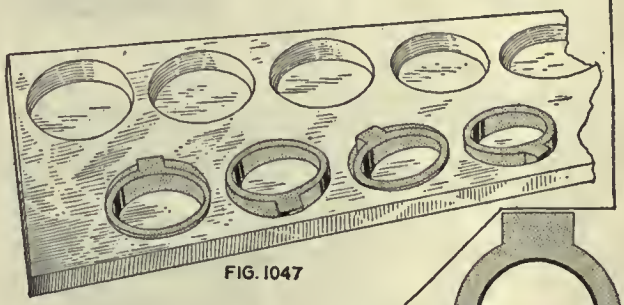

FIG. 1047

FIG. 1049

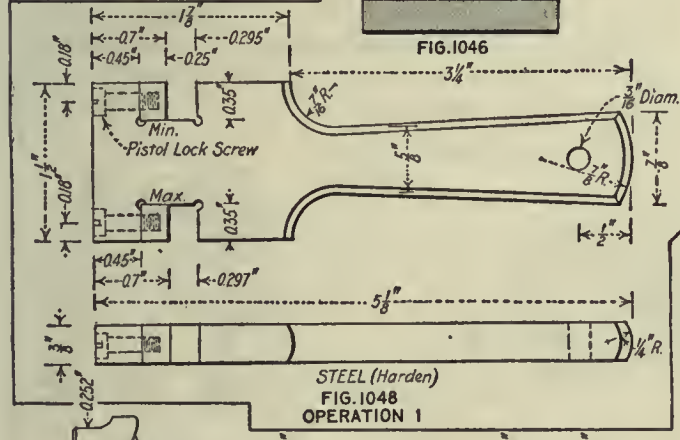

FIG. 1048
OPERATION 1

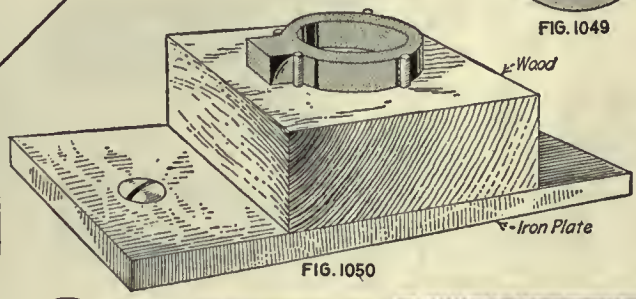

FIG. 1050

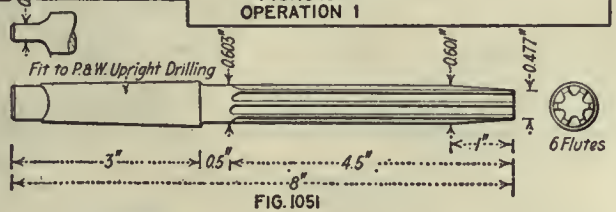

FIG. 1051

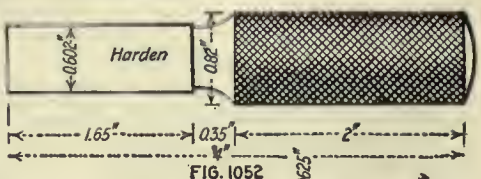

FIG. 1052

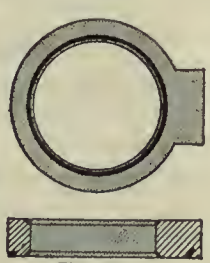

FIG. 1053

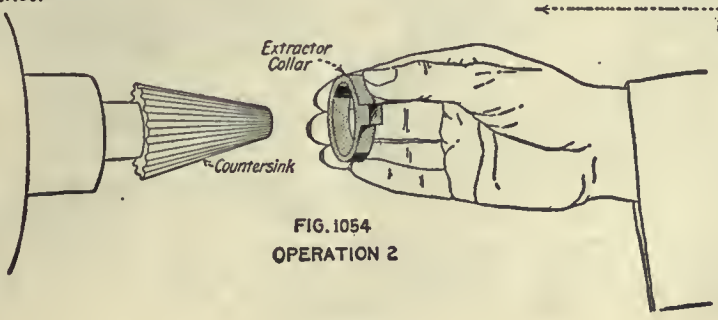

FIG. 1054
OPERATION 2

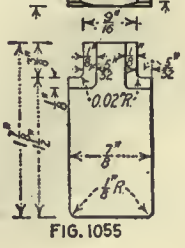

FIG. 1055

OPERATION A. FORGING FROM BAR

Transformation—Fig. 1045. Number of Operators—One. Description of Operation—Blocking from bar. Apparatus and Equipment Used—Billings & Spencer 400-lb. drop hammer. Production—200 per hr.

OPERATION B. ANNEALING

Number of Operators—One. Description of Operation—Placed in iron pots with powdered charcoal and heated to 850 deg. C. (1,562 deg. F.); left overnight to cool. Apparatus and Equipment Used—Iron pots, powdered charcoal, Brown & Sharpe annealing furnaces.

OPERATION B-1. PICKLING

Number of Operators—One. Description of Operation—Placed in wire baskets and left in the pickling solution, which consists of 1 part sulphuric acid and 9 parts water, for 10 or 12 min. Apparatus and Equipment Used—Wire baskets, pickling tanks (wooden) and pulley block.

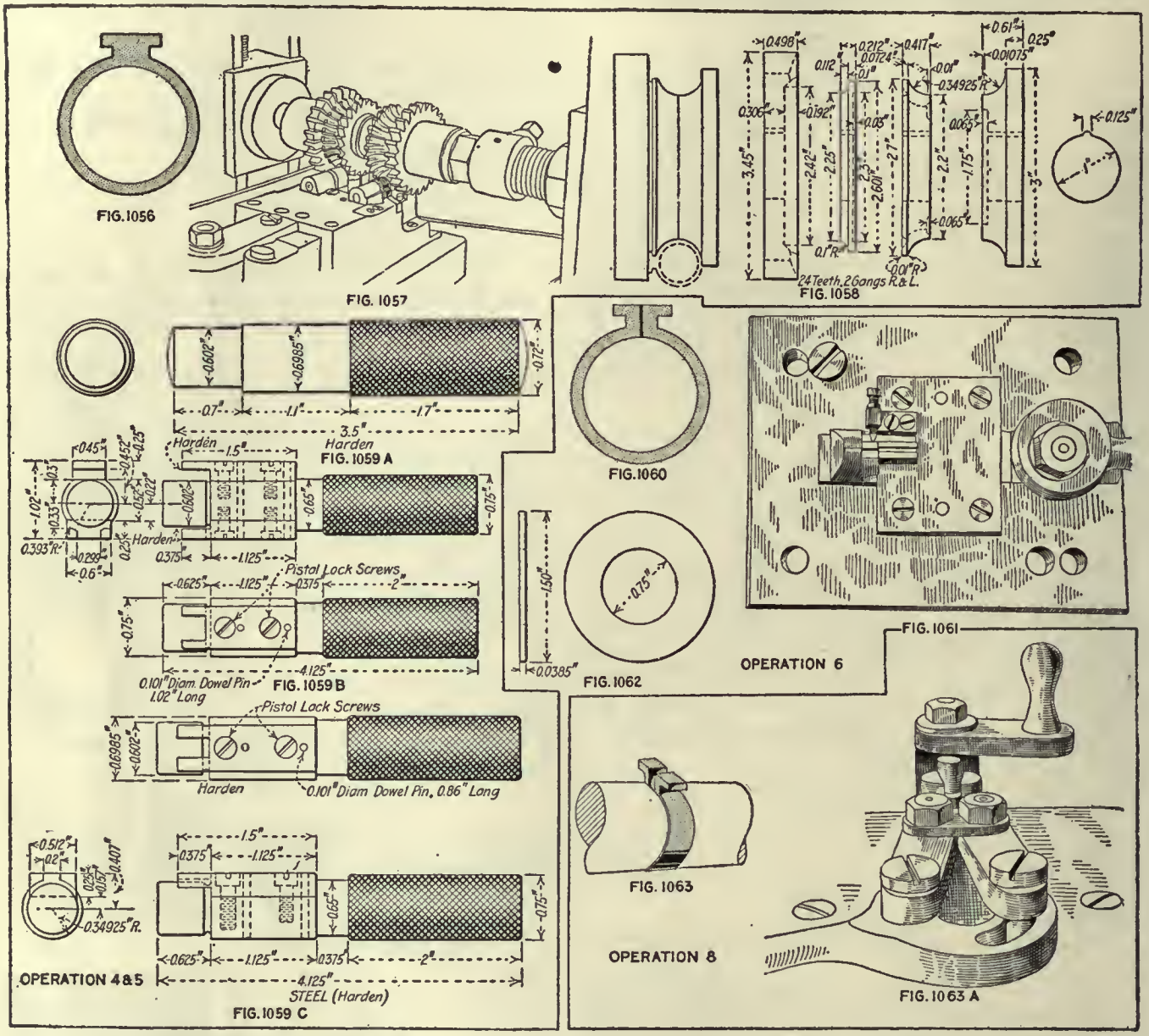

OPERATION C. TRIMMING

Machine Used—Bliss back-geared press. Number of Operators per Machine—One. Punches and Punch Holders—Square shank. Dies and Die Holders—In shoe, by setscrew. Stripping Mechanism—Punched down through die. Production—600 per hr.

OPERATION 1. GRINDING FRONT AND REAR ENDS

Transformation—Fig. 1046. Machine Used—Pratt & Whitney vertical grinder, 36-in. table. Number of Operators per Machine—One. Work-Holding Devices—Magnetic chuck, with frame to hold work. Fig. 1047. Cutting Tools—Cup grinding wheel. Number of Cuts—20. Cut Data—1,500 r.p.m.; 15-in. per min. feed. Gages—Fig. 1048, thickness. Production—200 per hr.

OPERATION 2. DRILLING AND REAMING

Transformation—Fig. 1049. Machine Used—Pratt & Whitney automatic, 16-in. upright. Number of Operators per Machine—One. Work-Holding Devices—In jig clamped by finger clamp, Fig. 1050. Tool-Holding Devices—Taper shank. Cutting Tools—Fig. 1051. Number of Cuts—One. Cut Data—350 r.p.m.; ⅝-in. feed. Coolant—Cutting oil. ⅛-in. stream. Gages—Fig. 1052. Production—30 per hr.

OPERATION AA. COUNTERSINKING BOTH SIDES

Transformation—Fig. 1053. Number of Operators—One. Description of Operation—Rounding corners on both sides of collar. Apparatus and Equipment Used—Speed lathe and countersink, Fig. 1054. Gages—Contour, Fig. 1055. Production—350 pieces per hr.

OPERATIONS 4 AND 5. MILLING RIGHT AND LEFT SIDES

Transformation—Fig. 1056. Machine Used—Pratt & Whitney No. 2 Lincoln miller. Number of Operators per Machine—One. Work-Holding Devices—In stud clamped with vise jaws, Fig. 1057. Tool-Holding Devices—Standard arbor. Cutting Tools—Milling cutters, Fig. 1058. Number of Cuts—Two. Cut Data—60 r.p.m; ⅝-in. feed. Coolant—Cutting oil, put on with brush. Average Life of Tool Between Grindings—2,500 pieces. Gages—Fig. 1059; A, inside and outside diameters; B, width of ears; C, width under ears. Production—35 per hr.

OPERATION CC. REMOVING BURRS LEFT BY OPERATION 4

Number of Operators—One. Description of Operation—Removing burrs thrown up by operation 4. Apparatus and Equipment Used—File. Production—Grouped with operations 4 and 5.

OPERATION DD. REMOVING BURRS LEFT BY OPERATION 5

Number of Operators—One. Description of Operation—Removing burrs thrown up by operation 5. Apparatus and Equipment Used—File. Production—Grouped with operation 5.

OPERATION 6. SLOTTING

Transformation—Fig. 1060. Machine Used—Garvin No. 3 hand miller. Number of Operators per Machine—One. Work-Holding Devices—Work is held on stud and clamped by vise jaws; the stop locates work, Fig. 1061. Tool-Holding Devices—Taper shank. Cutting Tools—Slitting saw. Fig. 1062. Number of Cuts—One. Cut Data—600 r.p.m.; hand feed. Coolant—Cutting oil, put on with brush. Average Life of Tool Between Grindings—500 pieces. Gages—None. Production—300 per hr.

OPERATION 7. SPREADING AND FILING INNER CORNERS OF EARS

Number of Operators—One. Description of Operation—Spreading collar for assembling with bolt. Apparatus and Equipment Used—Spreading fixture, Fig. 1063-A. Production—350 pieces per hr.

OPERATION 8. ASSEMBLING WITH BOLT

Transformation—Fig. 1063. Number of Operators—One. Description of Operation—Heated to a cherry red, closed together on the bolt. Apparatus and Equipment Used—Furnace and fixture (see Fig. 748); Rockwell oil furnace.

Ejector

The ejector, as shown in detail in Fig. 1064, throws the cartridge case out of the receiver after it has been drawn back by the extractor. It is made of Class D material 0.26 in. square and is drop-forged to shape. It has three important points—the point *A*, the heel *B* and the pin hole *C*. It is hinged on the ejector pin in its recess on the left side of the receiver, ejection being accomplished by the slot lug of the bolt coming in contact with the heel when the bolt is drawn to the rear.

Although a small piece, its manufacture is even more difficult on that account as it is not an easy piece to handle. The dimensions and angles are held within very close limits as it plays an important part in a small space. It is rather difficult to hold for some of the operations but the hole, which is the first machining operation, serves for holding as well as for locating in subsequent operations. This hole is used in all future operations and is also the gaging point as can be seen by following the illustrations.

Milling the sides, as in Fig. 1078, is a case where the use of two cutters balances the thrust of one against the other and makes it much easier to hold the piece than if a single cutter were used.

Some of the gages and the way in which they are used are shown in Figs. 1076, 1080 and 1094, the pins being used to locate the piece in each case. Fig. 1075 shows how the gangs of cutters give the desired shape to both sides of the ejector and also insure the correct outline.

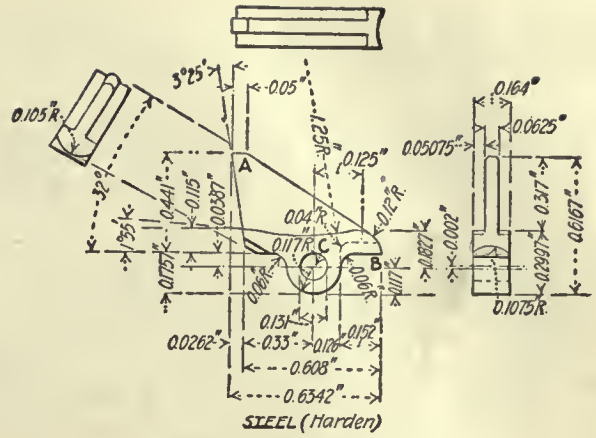

FIG. 1064

OPERATIONS ON EJECTOR

Operation	
A	Blanking
B	Pressing to thickness
B-1	Pickling
3	Drilling pin hole
4	Reaming pin hole
5 and 6	Milling edges; front, rear and both sides
7	Straddle-milling tongue
AA	Removing burrs left by operation 7 (operation BB occurs in operation CC)
9	Profiling right edge of tongue
10	Hand-milling left front corner
CC	Removing burrs from pin hole (reamer)
8	Jig-miller rear end
16	Reaming and countersinking ejector-pin hole
11	Polishing upper and lower sides of bearing and front end
18	Filing, general cornering
13	Casehardening

OPERATION A. BLANKING

Transformation—Fig. 1065. Machine Used—Perkins No. 19, 1½-in. stroke. Number of Operators per Machine—One. Punches and Punch Holders—Square shank. Dies and Die Holders—Held by setscrew in shoe. Stripping Mechanism—Steel stripper screwed to face of die. Lubricant—Stock oil with cutting oil. Production—600 pieces per hr. Note—Blanking two at a time.

OPERATION B. PRESSING

Machine Used—Perkins No. 19, 1½-in. stroke. Number of Operators per Machine—One. Punches and Punch Holders—Square shank. Dies and Die Holders—Die plate screwed to shoe; shoe bolted to bed of press. Production—600 pieces per hr. Note—Pressing burrs and trying to straighten up corners.

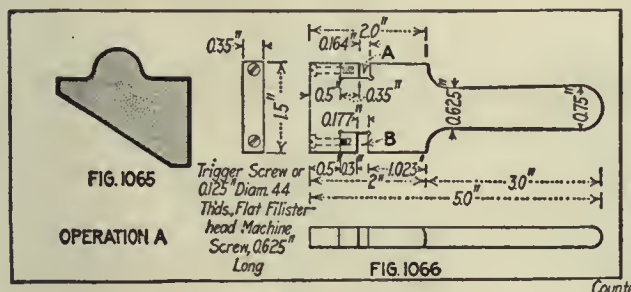

FIG. 1065

OPERATION A

FIG. 1066

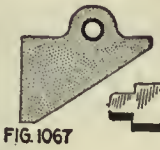

FIG. 1067

FIG. 1068

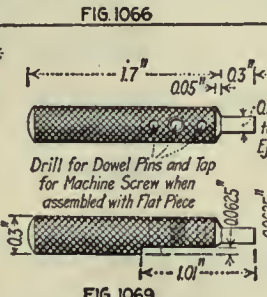

FIG. 1069

OPERATION 3

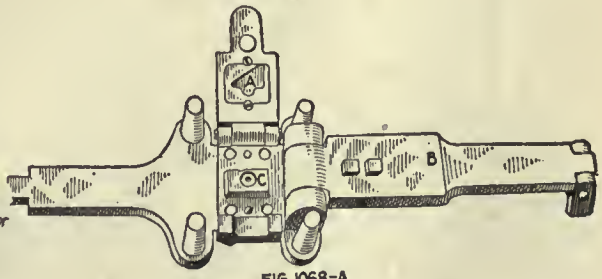

FIG. 1068-A

FIG. 1070

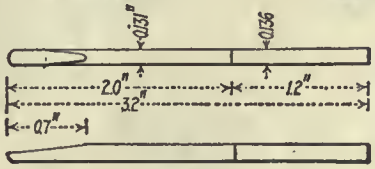

FIG. 1071

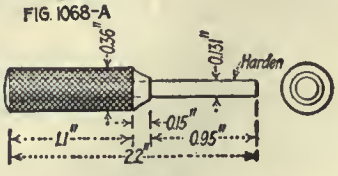

FIG. 1072

OPERATION 4

OPERATION B-1. PICKLING

Number of Operators—One. Description of Operation—Put into the pickling solution, consisting of 1 part sulphuric acid and 9 parts water, and left for 10 or 12 min. Apparatus and Equipment Used—Wire baskets, wooden pickling tanks and pulley block.

OPERATION 3. DRILLING PIN HOLE

Transformation—Fig. 1067. Machine Used—Sigourney Tool Co. three-spindle 12-in. upright drilling machine. Number of Operators per Machine—One. Work-Holding Devices—Drill jig, Fig. 1068; work held in leaf A, which is locked in place by arm B; bushing at C. Tool-Holding Devices—Drill chuck. Cutting Tools—Twist drill. Number of Cuts—One. Cut Data—900 r.p.m.; hand feed. Coolant—Cutting oil, $\frac{1}{8}$-in. stream. Average Life of Tool Between Grindings—600 pieces. Gages—Fig. 1069, diameter of hole and location. Production—125 per hr.

OPERATION 4. REAMING PIN HOLE

Transformation—Same as Fig. 1067. Machine Used—Sigourney Tool Co. three-spindle 12-in. upright. Number of Operators per Machine—One. Work-Holding Devices—Held in block, block held in hand, Fig. 1070. Tool-Holding Devices—Drill chuck. Cutting Tools—Reamer, Fig. 1071. Number of Cuts—One. Cut Data—900 r.p.m.; hand feed. Coolant—Cutting oil, $\frac{1}{8}$-in. stream. Average Life of Tool Between Grindings—600 pieces. Gages—Fig. 1072. Production—350 per hr.

OPERATIONS 5 AND 6. MILLING EDGES, FRONT, REAR AND BOTH SIDES

Transformation—Fig. 1073. Machine Used—Pratt & Whitney No. 2 Lincoln miller. Number of Operators per Machine—One. Work-Holding Devices—Held on pin clamped by vise jaws, Fig. 1074; this holds work in two positions, A and B. Tool-Holding Devices—Standard arbor. Cutting Tools—Fig. 1075, gang of milling cutters. Number of Cuts—One. Cut Data—70 r.p.m.; $\frac{5}{8}$-in. feed. Coolant—Cutting oil, put on with brush. Average Life of Tool Between Grindings—5,000 pieces. Gages—Fig. 1076; ejector fits over pin, and three slides A, B and C measure the three sides. Production 45 per hr. Note—Work held on pin.

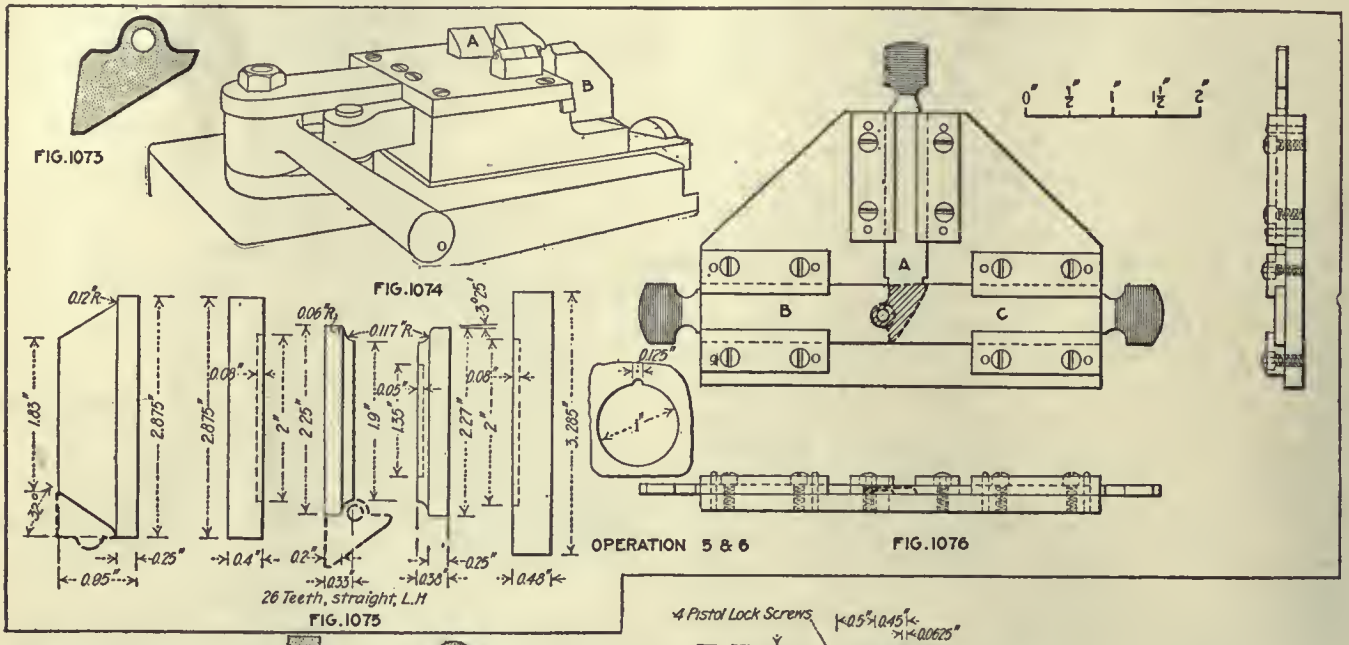

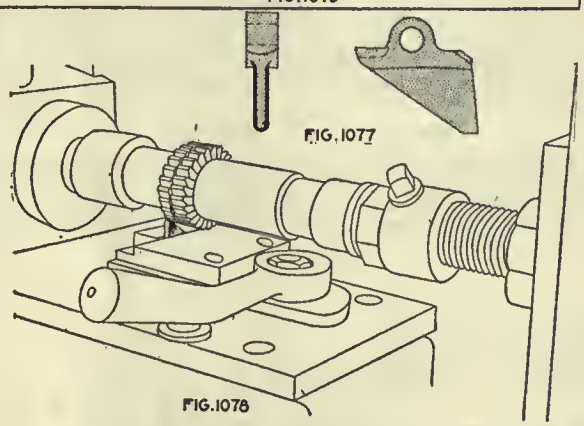

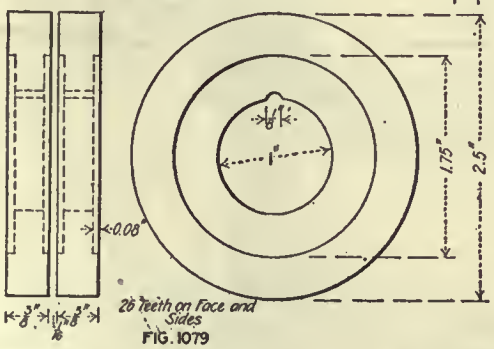

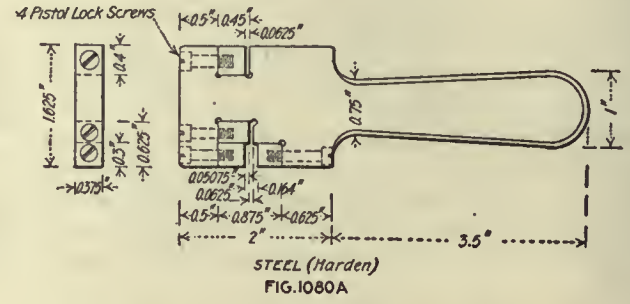

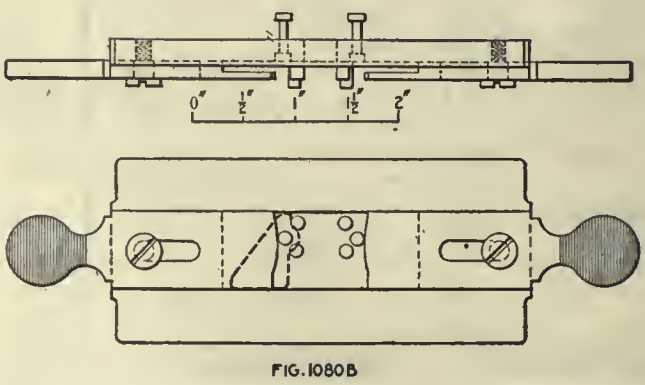

OPERATION 7. STRADDLE-MILLING TONGUE

Transformation—Fig. 1077. Machine Used—Pratt & Whitney No. 2 Lincoln miller. Number of Operators per Machine—One. Work-Holding Devices—Held on pin, clamped by vise jaws, Fig. 1078. Tool-Holding Devices—Standard arbor. Cutting Tools—Two side-milling cutters, Fig. 1079. Number of Cuts—One. Cut Data—80 r.p.m.; $\frac{5}{8}$-in. feed. Coolant—Cutting oil, $\frac{1}{8}$-in. stream. Average Life of Tool Between Grindings—5,000 pieces. Gages—Fig. 1080; A, width of tongue and body; B, radius of side of tongue. Production—40 per hr.

OPERATION AA. REMOVING BURRS LEFT BY OPERATION 7

Number of Operators—One. Description of Operation—Removing burrs thrown up by operation 7. Apparatus and Equipment Used—File. Production—Grouped with operation 7.

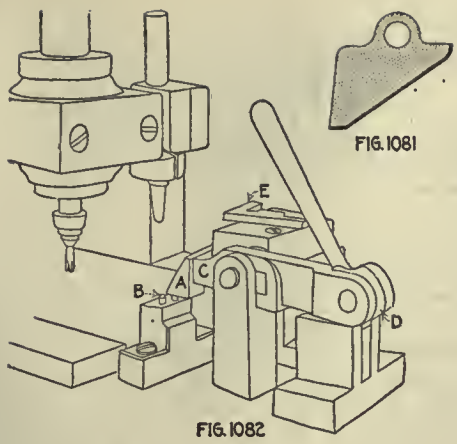

FIG. 1082

FIG. 1081

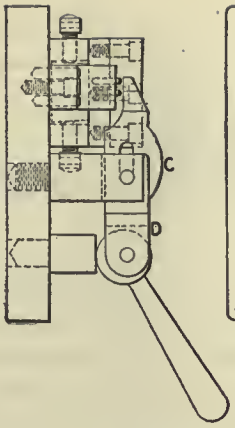

FIG. 1083

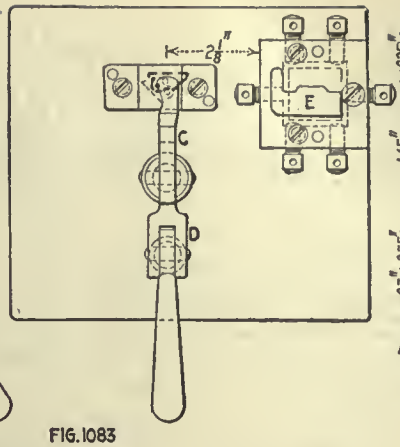

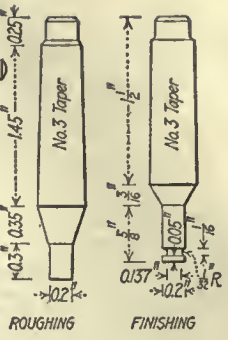

FIG. 1084

OPERATION 9

OPERATION 9. PROFILING RIGHT EDGE OF TONGUE

Transformation—Fig. 1081. Machine Used—Pratt & Whitney No. 1 profiler. Number of Operators per Machine—One. Work-Holding Devices—Held on pin clamped with finger clamp, Fig. 1082; details in Fig. 1083; work located on pin A against stop B; clamp C and cam D hold in place; profile form at E. Tool-Holding Devices—Taper shank. Cutting Tools—Milling cutters, Fig. 1084. Number of Cuts—Two. Cut Data—1,200 r.p.m.; hand feed. Coolant—Compound, ¼-in. stream. Average Life of Tool Between Grindings—500 pieces. Gages—Fig. 1076, slide C. Production—80 per hr.

OPERATION 10. HAND-MILLING LEFT FRONT CORNER

Transformation—Fig. 1085. Machine Used—Garvin No. 3 hand miller. Number of Operators per Machine—One. Work-Holding Devices—Rotating fixture, Fig. 1086; details in Fig. 1087; corner A is rounded as fixture rotates; work held on pin B, located by stop C. Tool-Holding Devices—Taper shank. Cutting Tools—Milling cutter, Fig. 1088. Number of Cuts—One. Cut Data—600 r.p.m.; hand feed. Coolant—Cutting oil, put on with brush. Average Life of Tool Between Grindings—5,000 pieces. Gages—Finger gage, Fig. 1089; held on pin A, located by pin B; finger C swings over the work. Production—325 per hr.

OPERATION CC. REMOVING BURRS FROM PIN HOLE (REAMER)

Number of Operators—One. Description of Operation—Removing burrs and reaming hole squeezed together by fixture in operation 10. Apparatus and Equipment Used—Hand reamer. Production—Grouped with operation 8.

OPERATION 8. JIG-MILLING REAR END

Transformation—Fig. 1090. Machine Used—Sigourney Tool Co. three-spindle 12-in. upright. Number of Operators per Machine—One. Work-Holding Devices—Drill jig, Fig. 1091; work A is held on pin B, and clamped by arm C; guide bushing at D; details in Fig. 1092. Tool-Holding Devices—Drill chuck. Cutting Tools—Milling cutter, Fig. 1093. Number of Cuts—One. Cut Data—650 r.p.m.; hand feed. Coolant—Cutting oil, ⅛-in. stream. Average Life of Tool Between Grindings—1,500 pieces. Gages—Fig. 1094, location of groove with relation to pin hole. Production—100 per hr.

OPERATION 16. REAMING AND COUNTERSINKING EJECTOR-PIN HOLE

Machine Used—Bench lathe. Number of Operators per Machine—One. Work-Holding Devices—In hand against the countersink. Tool-Holding Devices—In drill chuck in bench lathe. Cutting Tools—Fig. 1095, A and B. Cut Data—900 r.p.m. Coolant—None. Gages—Fig. 1096. Production—250 per hr.

OPERATION 11. POLISHING UPPER AND LOWER SIDES OF BEARING AND FRONT END

Number of Operators—One. Description of Operation—Polishing upper and lower sides of bearing and front end. Apparatus and Equipment Used—Polishing jack and wheel. Production—300 per hr.

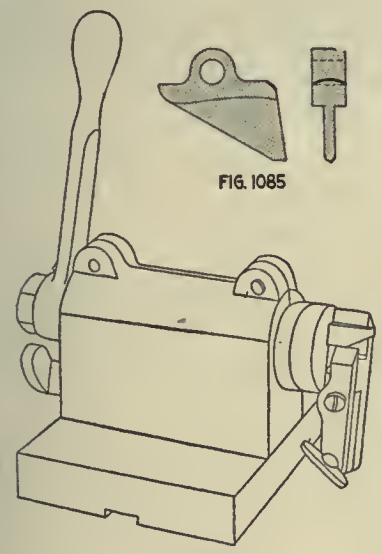

FIG. 1085

FIG. 1086

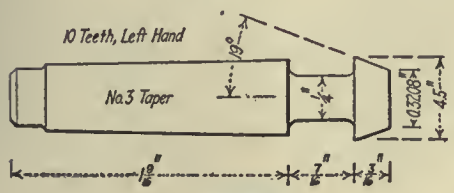

FIG. 1088

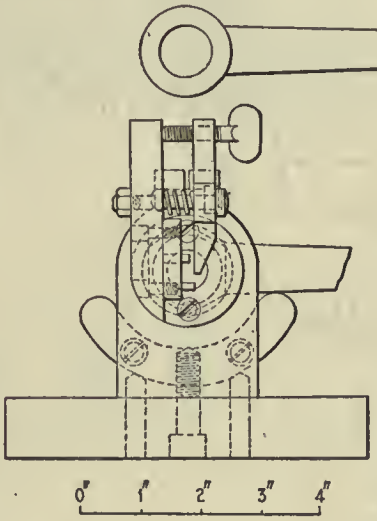

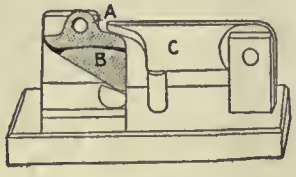

FIG. 1089

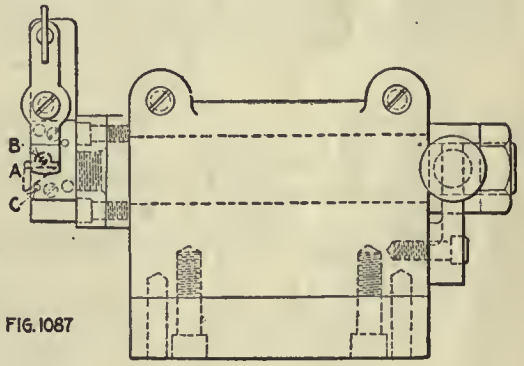

FIG. 1087

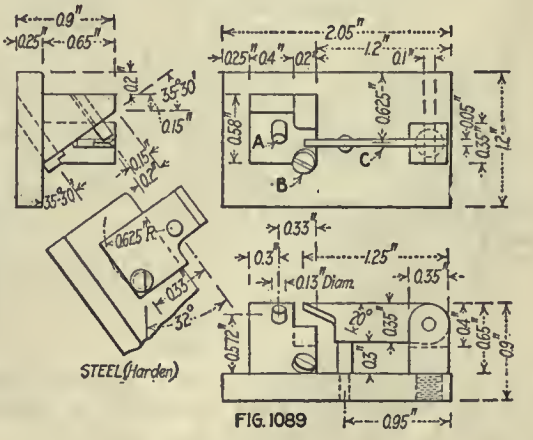

FIG. 1089

OPERATION 10

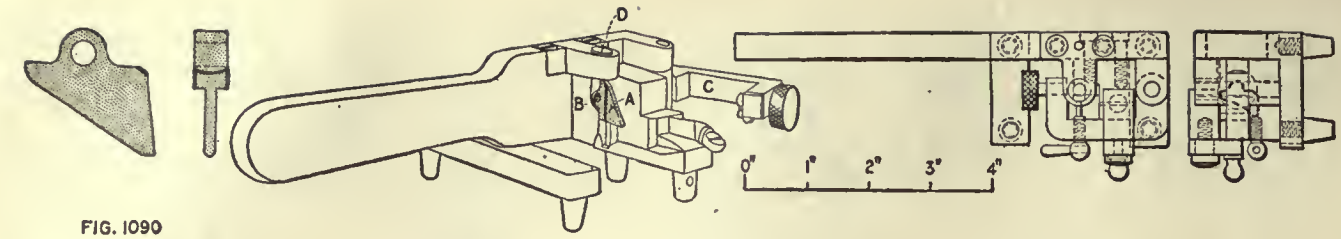

FIG. 1090

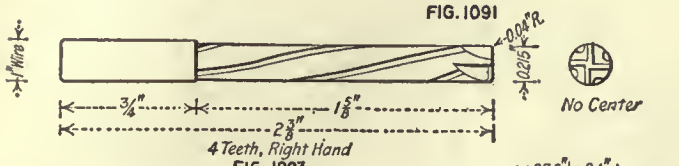

FIG. 1091

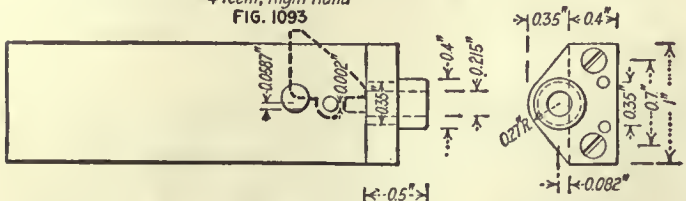

FIG. 1093

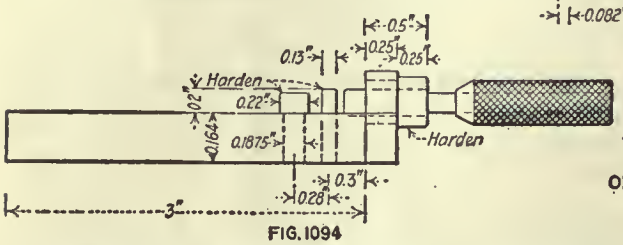

FIG. 1094

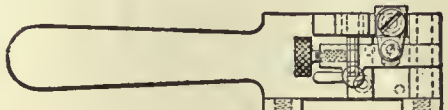

FIG. 1092

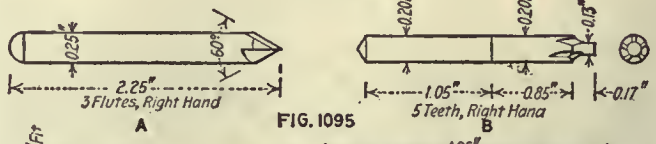

FIG. 1095

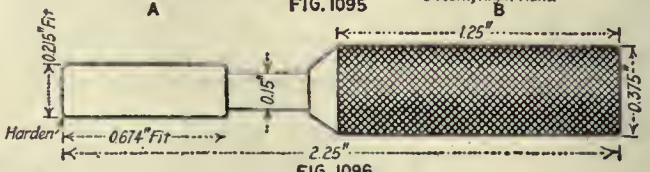

FIG. 1096

OPERATION 8

OPERATION 18. FILING, GENERAL CORNERING

Number of Operators—One. Description of Operation—General filing and cornering. Apparatus and Equipment Used—File. Production—120 per hr.

OPERATION 13. CASEHARDENING

Number of Operators—One. Description of Operation—Caseharden in cyanide at 1,500 deg. F.; quench in oil. Apparatus and Equipment Used—Crucibles in oil-burning furnaces.

Ejector Pin

The ejector pin is an automatic-machine job and holds the ejector in place in the receiver. The head is slotted so as to be able to control the pin easily during the assembling, the head being spread to fit the hole tightly.

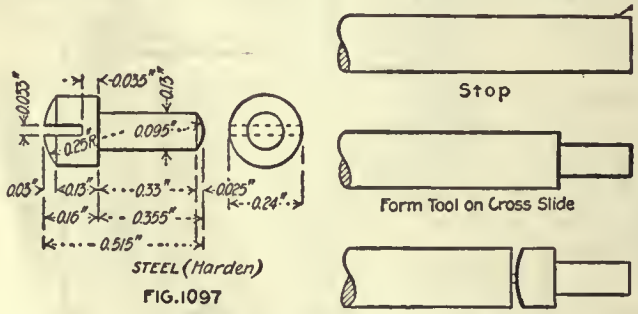

FIG. 1097

FIG. 1098

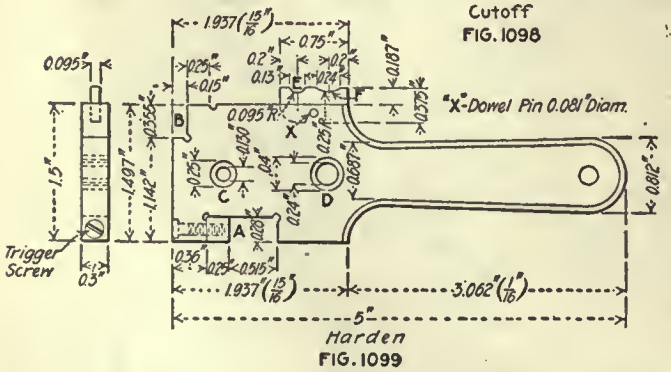

FIG. 1099

It is made of screw stock 0.245 in. in diameter and comes in 10-ft. lengths. The limit is —0.001 in. Full details are given in Figs. 1097, 1098 and 1099.

OPERATIONS ON THE EJECTOR PIN

Operation

1 Automatic
2 Slitting (hand and automatic)
3 Crowning
4 Spreading slot

OPERATION 1. AUTOMATIC

Machine Used—Brown & Sharpe automatic; tool layout, Fig. 1098. Number of Operators per Machine—One. Work-Holding Devices—Draw-back chuck. Tool-Holding Devices—Holder on crossfeed carriage. Number of Cuts—Two. Cut Data—1,500 r.p.m. Coolant—Cutting oil, ½-in. stream. Average Life of Tool Between Grindings—3,000 pieces. Gages—Fig. 1099; A, total length; B, length of body; C and D, diameters; E and F, radius of end and head. Production—125 per hr. Note—Size of stock, 0.245 in., slotted in Whitney hand miller; pins are blued in the usual way.

Safety-Lock Spindle and Plunger

These are small details but require several interesting operations. The spindle is largely an automatic screw machine job, the plunger entirely so. The thumb-piece is a drop forging and is finished all over, mostly by milling operations.

A number of interesting holding fixtures and gages ean be found in connection with thesc smaller parts. The profiling of the cam on thc spindle in Fig. 1106 and the gage in 1107 are the main points of interest in this piece.

One of the difficulties of these small parts is to hold them while being machined. Special-jawed fixtures are used so as to insure their being held firmly and in proper position. The irregular outline of the thumb-piece makes it a bit troublesomc but it is held easily in the various fixtures which have been designed with all the difficulties in view.

*Copyright, 1917, Hill Publishing Co.

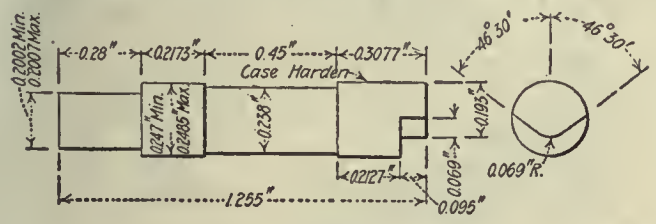

STEEL

FIG. 1100

OPERATIONS ON SAFETY-LOCK SPINDLE

Operation
1 Automatic
2 Profiling
3 Burring

OPERATION 1. AUTOMATIC

Transformation—Fig. 1101; sequence of operations, Fig. 1102. Machine Used—Gridley automatic, 1-in. stock. Number of Operators per Machine—One. Work-Holding Devices—Draw-back chuck. Tool-Holding Devices—Regular tool holder. Cutting Tools—See Fig. 1102. Number of Cuts—Four. Cut Data—300 r.p.m.; 5/8-in. feed. Coolant—Cutting oil, 1/2-in. stream. Average Life of Tool Between Grindings—1,500 pieces. Gages—Fig. 1103; A, lengths and one diameter; B, diameters and shoulders. Production—112 per hr.

OPERATION 2. PROFILING

Transformation—Fig. 1104. Machine Used—Pratt & Whitney No. 1 propeiler, Fig. 1105; work at A, form at B; machining diagram, Fig. 1106. Number of Operators per Machine—One. Work-Holding Devices—Vise jaws. Tool-Holding Devices—Taper shank. Cutting Tools—End mill. Number of Cuts—One. Cut Data—1,200 r.p.m.; hand feed. Coolant—Compound, 1/4-in. stream. Average Life of Tool Between Grindings—350 pieces. Gages—Fig. 1107, profile. Production—125 per hr.

OPERATION 3. BURRING

Number of Operators—One. Description of Operation—Removing burrs thrown up by profile cutter. Apparatus and Equipment Used—File and speed lathe. Production—1,000 per hr.

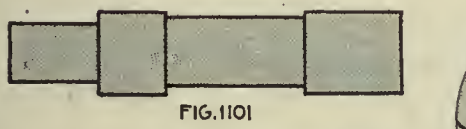

FIG. 1101

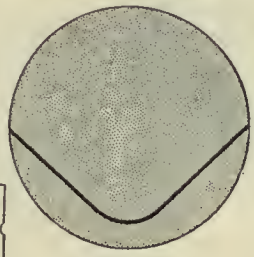

FIG. 1104

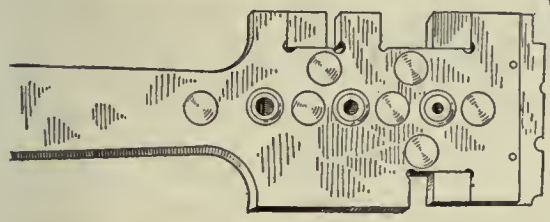

FIG. 1103A

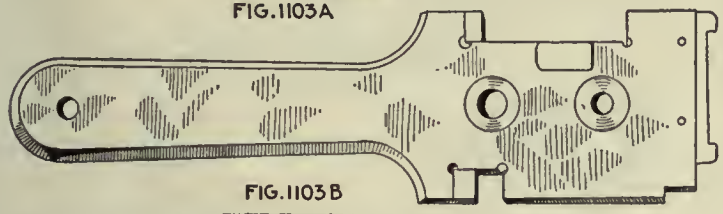

FIG. 1103B

Turn Outside, Single Tool, Roller Rest Behind

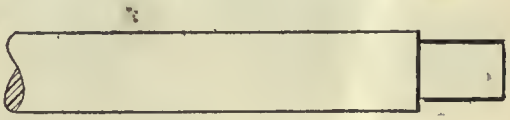

Hollow Mill and Square End

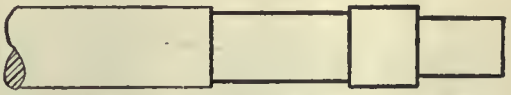

Turn Center, Single Tool and Roller Rest, in Cross Slide

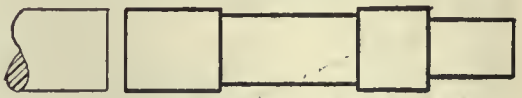

Cutoff, Single Tool in Cross Slide

FIG. 1102

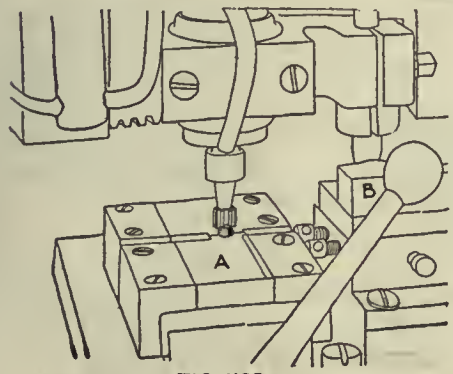

FIG. 1105

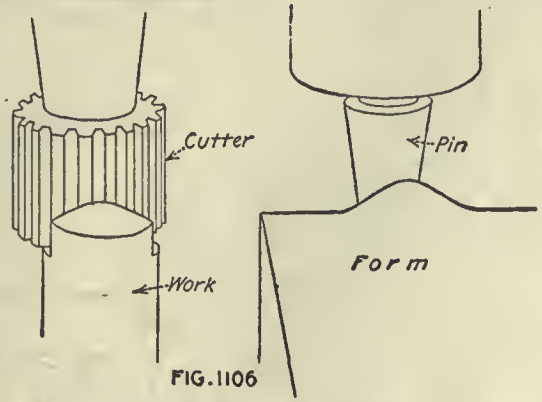

FIG. 1106

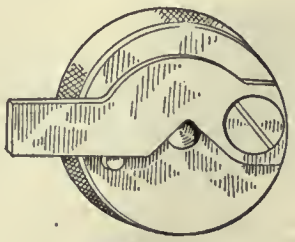

FIG. 1107

FIG. 1101, 1102, 1103, OP. 1 - FIG. 1104, 1105, 1106, 1107 OP. 2

OPERATIONS ON SAFETY-LOCK PLUNGER

Operation
1 Automatic
2 Burring

OPERATION 1. AUTOMATIC

Transformation—See tool layout, Fig. 1108-A. Machine Used—Hartford automatic, ½-in. hole in spindle. Number of Operators per Machine—One. Work-Holding Devices—Draw-back chuck. Cutting Tools—Box tools and cutoff. Number of Cuts—Three. Cut Data—900 r.p.m.; 5/8-in. feed. Coolant—Cutting oil, ½-in. stream. Average Life of Tools Between Grindings—800 pieces. Gages—Ring and length. Production—60 per hr.

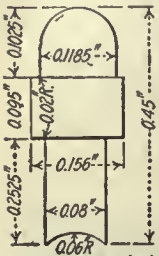

FIG. 1108

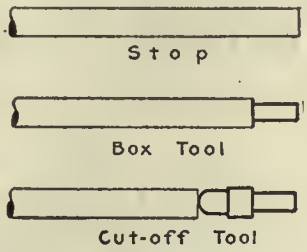

FIG. 1108A

OPERATION 2

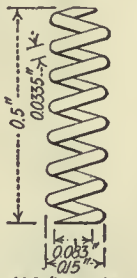

FIG. 1109

Safety Lock and Component Parts

The safety lock controls the firing mechanism and locks the bolt either in a safe position or so it can be fired at will. It consists of a thumb-piece, spring, spindle and plunger for holding it in either position. It has the cam *A*, Fig. 1110, locking groove *B*, the cocking-piece clearance groove *C* and the plunger hole *D*. The spring and plunger are at right angles to the spindle and hold it in either "safe" or "ready" position, as may be desired. The thumb-piece is riveted to the end of the spindle, Fig. 1100. Safety lock, plunger and spring are shown in Figs. 1108 and 1109.

This riveting is done in a special fixture shown in Fig. 1157, the end of the spindle being headed over into the recess cut in the outer end of the thumb-piece and shown in Fig. 1110. This recess is cut in a special fixture, Fig. 1129, with a double angular cutter, Fig. 1130, instead of being punched or swaged as in the case of the cocking piece.

Several rotating or oscillating fixtures are used for rounding corners and there is likewise a side counterboring operation for clearing the bolt cocking piece on the

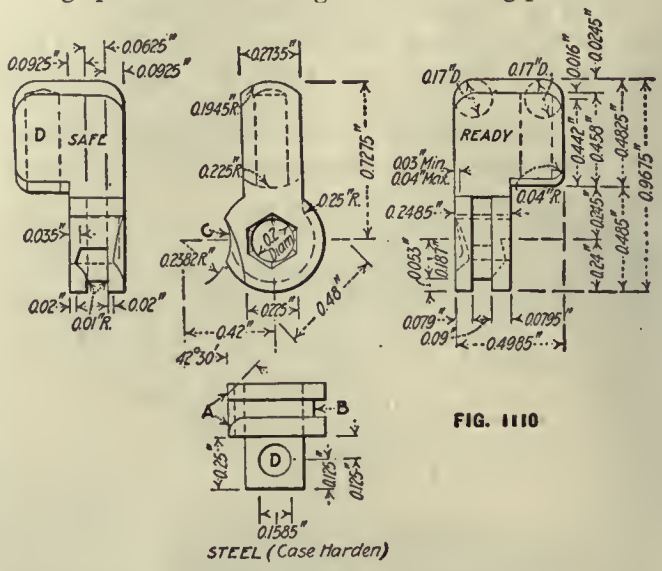

FIG. 1110

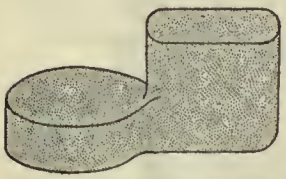
FIG. 1111, OP. A

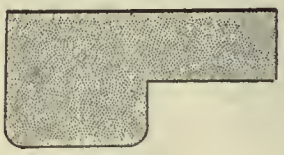
FIG. 1112

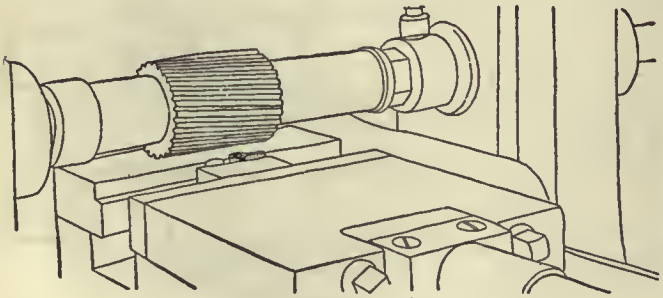
FIG. 1113

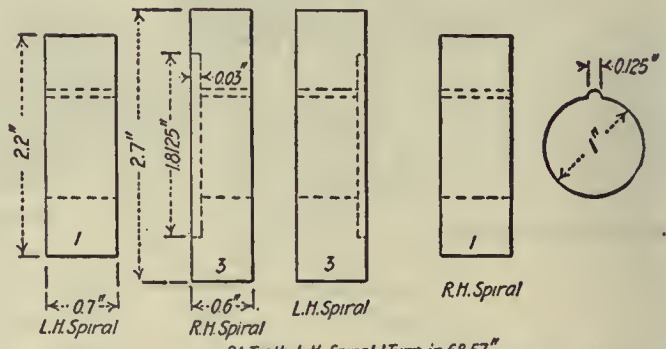

24 Teeth, L.H. Spiral 1 Turn in 68.57"
Mill No. 1-Teeth on Face Only. No. 3-Face and Side
FIG. 1116

FIG. 1117

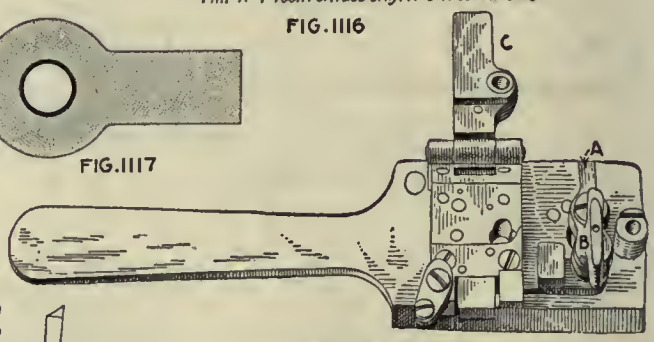

FIG. 1118

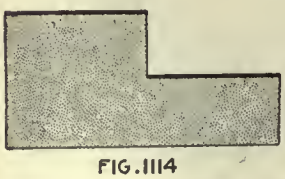
FIG. 1114

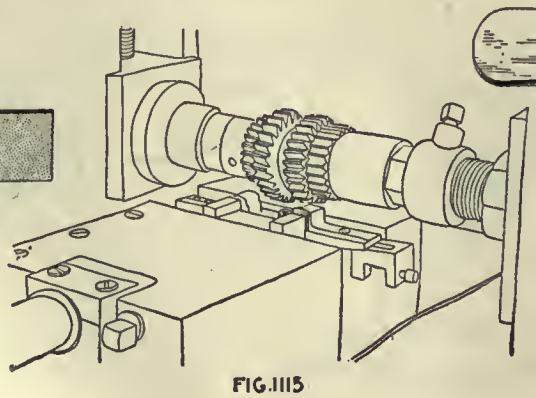
FIG. 1115

FIG. 1112, 1113, OP. 1
FIG. 1114, 1115, 1116, OP. 5
FIG. 1117, 1118, 1119, OP. 2

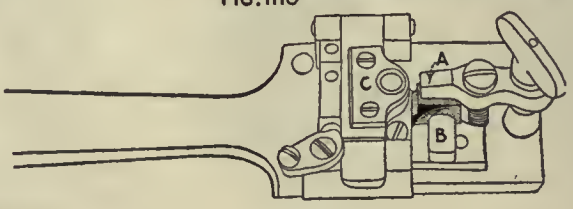

FIG. 1119

bolt. This is easily done in the fixture shown in Fig. 1141.

Leaf jigs are used for drilling and have several advantages for work of this kind on small pieces. Leaf gages are also used to gage test the cams and other important corners of the thumb-piece.

The stamping of both sides at once is also of interest. A special holder carries one punch while the ram carries the other. By laying the thumb-piece in position on the lower punch and tripping the press, both names "Ready" and "Safe" are stamped at the one operation.

The nesting or interlocking of cutters is practiced quite extensively in nearly all milling operations on rifle work. The milling-cutter illustrations, such as Fig. 1123, show exactly how this is done and give all dimensions

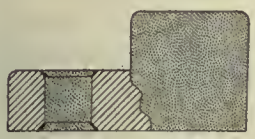

FIG. 1120, OP. 2A

FIG. 1121

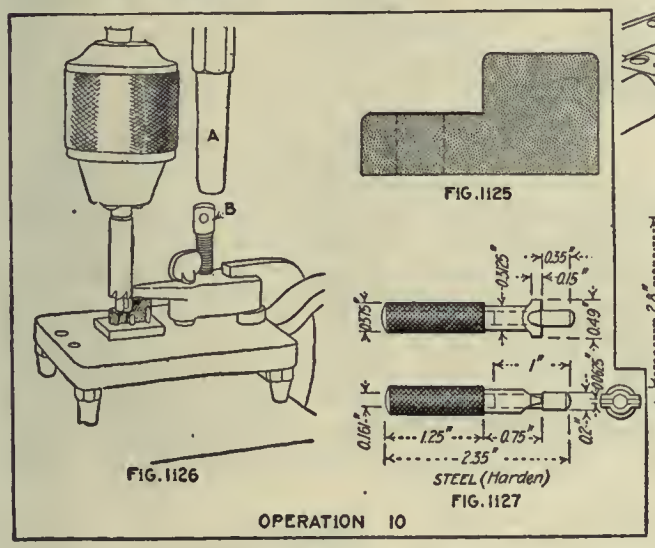

FIG. 1126

FIG. 1125

FIG. 1127

OPERATION 10

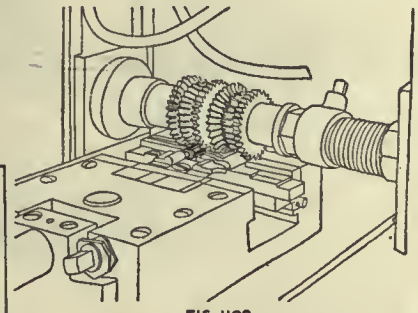

FIG. 1122

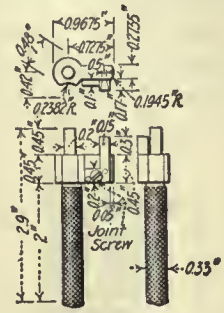

FIG. 1124

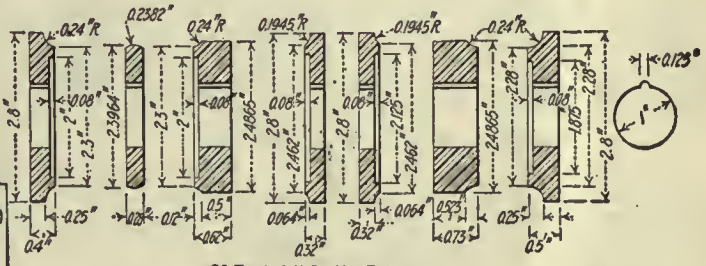

FIG 1123

OPERATION 3 & 4

nccessary for making cutters. Where cutters are regular, with no special features, it is only necessary to mention them by diameter and width in the text.

OPERATIONS ON SAFETY-LOCK THUMB-PIECE

Operation	
A	Forging from bar
B	Annealing
B-1	Pickling
C	Trimming
1	Milling rear end
5	Milling front edge
2	Drilling and reaming spindle hole
2-A	Countersinking hole for operations 3 and 4
AA	Removing burrs from spindle
3	Milling top
4	Milling bottom
CC	Removing burrs left by operation 4
10	Counterboring front of hub
7	Hand-milling for riveting spindle
11	Drilling and reaming spring-spindle hole
12	Hand-milling front and rear corners
EE	Removing burrs left by operation 12
14	Hand-milling circle over spring-spindle hole
9	Jig-milling clearance for cocking piece (operations 9 and FF grouped)
FF	Removing burrs left by operation 9
15	Profiling slot
13	Hand-milling rear cam
16	Milling front cam (on drilling machine)
6	Stamping "Ready" and "Safe" (operations 6, 8 and GG grouped)
8	Hand-milling rear end to finish
GG	Removing burrs from spring-spindle hole
17	Countersinking spring-spindle hole
18	Polishing sides, lower end and over circle
19	Filing, general cornering, matching milling cuts front of joint
20	Casehardening
21	Assembling with spindle, spring and spring spindle
22	Polishing rear end
23	Etching rear end

OPERATION A. FORGING FROM BAR

Transformation—Fig. 1111. Number of Operators—One. Description of Operation—Shaping from bar. Apparatus and Equipment Used—Billings & Spencer 400-lb. drop hammer. Production—250 per hr.

OPERATION B. ANNEALING

Number of Operators—One. Description of Operation—Placed in iron pots packed with powdered charcoal; heated to 850 deg. C. (1,562 deg. F.); left overnight to cool. Apparatus and Equipment Used—Brown & Sharpe annealing furnaces; oil burner and powdered charcoal.

OPERATION B-1. PICKLING

Number of Operators—One. Description of Operation—Placed in wire baskets and then left in the pickling solution (1 part sulphuric acid and 9 parts water) for 10 or 12 min. Apparatus and Equipment Used—Wire baskets, wooden pickling tanks and hand hoist.

OPERATION C. TRIMMING

Machine Used—Perkins press, 2½-in. stroke. Number of Operators per Machine—One. Punches and Punch Holders—Square shank. Dies and Die Holders—Held in shoe by set-screw. Stripping Mechanism—Punched down through die. Production—600 per hr.

OPERATION 1. MILLING REAR END

Transformation—Fig. 1112. Machine Used—Pratt & Whitney No. 2 Lincoln miller, Fig. 1113. Number of Operators per Machine—One. Work-Holding Devices—In formed vise jaws, Tool-Holding Devices—Standard arbor. Cutting Tools—Spiral milling cutter. Number of Cuts—One. Cut Data—60 r.p.m.; ⅝-in. feed. Coolant—Cutting oil, put on with brush. Average Life of Tool Between Grindings—5,000 pieces. Gages—None. Production—125 per hr.

OPERATION 5. MILLING FRONT EDGE

Transformation—Fig. 1114. Machine Used—Pratt & Whitney No. 2 Lincoln miller, Fig. 1115. Number of Operators per Machine—One. Work-Holding Devices—Special vise jaws, Tool-Holding Devices—Standard arbor. Cutting Tools—Two spiral milling cutters, Fig. 1116. Number of Cuts—One. Cut Data—60 r.p.m.; ⅝-in. feed. Coolant—Cutting oil, put on with brush. Average Life of Tool Between Grindings—5,000 pieces. Gages—For thickness of round end. Production—125 per hr.

OPERATION 2. DRILLING AND REAMING SPINDLE HOLE

Transformation—Fig. 1117. Machine Used—Run on any two-spindle upright drilling machine. Number of Operators per Machine—One. Work-Holding Devices—Drill jig, Figs. 1118 and 1119. Tool-Holding Devices—In drill chuck Cutting Tools—Drill and reamer. Number of Cuts—Two. Cut Data—450 r.p.m.; hand feed. Coolant—Cutting oil, ⅛-in. stream. Average Life of Tool Between Grindings—200 pieces. Gages—Plug, 0.02 in. in diameter. Production—125 per hr.

OPERATION 2-A. COUNTERSINKING HOLE FOR OPERATIONS 3 AND 4

Transformation—Fig. 1120. Machine Used—Bench lathe. Number of Operators per Machine—One. Work-Holding Devices—In hand. Tool-Holding Devices—Drill chuck. Cutting Tools—Countersink. Cut Data—600 r.p.m.; hand feed. Coolant—Cutting oil, put on with brush. Average Life of Tool Between Grindings—1,500 pieces. Gages—None. Production—Grouped with operation 2.

OPERATION AA. REMOVING BURRS FROM SPINDLE HOLE

Number of Operators—One. Description of Operation—Removing burrs from spindle hole. Apparatus and Equipment Used—Hand reamer. Production—Grouped with operation 2

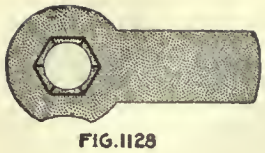

FIG. 1128

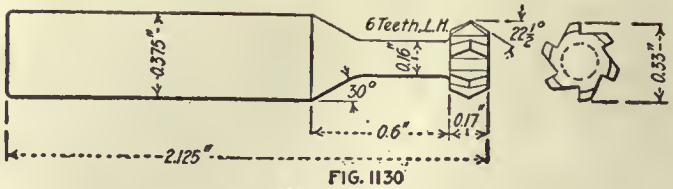

FIG. 1130

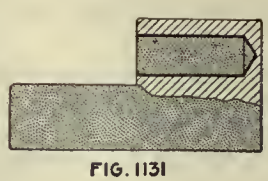

FIG. 1131

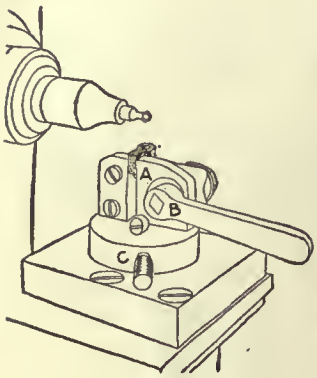

FIG. 1129

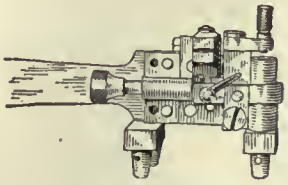

FIG. 1132

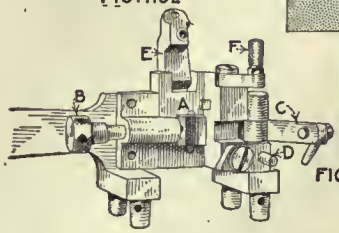

FIG. 1132A, OP. 11

FIG. 1133

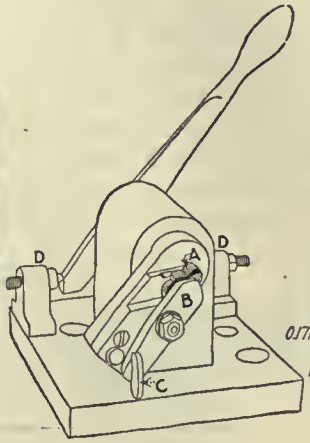

FIG. 1134

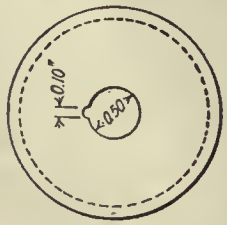

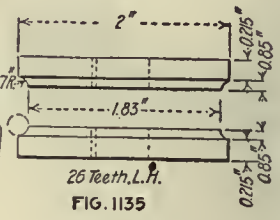

FIG. 1135

FIG. 1128, 1129, 1130, OP. 7. FIG. 1131, 1132, 1132A, OP. 11
FIG. 1133, 1134, 1135, OP. 12

OPERATION 3. MILLING TOP

Transformation—Fig. 1121. Machine Used—Pratt & Whitney No. 2 Lincoln miller, Fig. 1122. Number of Machines per Operator—Two. Work-Holding Devices—On stud clamped with vise jaws. Tool-Holding Devices—Standard arbor. Cutting Tools—Gang of milling cutters, Fig. 1123. Number of Cuts—One. Cut Data—80 r.p.m.; ⅝-in. feed. Coolant—Compound, ¼-in. stream. Average Life of Tool Between Grindings—5,000 pieces. Gages—See Fig. 1124; thickness and location of side with center hole. Production—125 per hr.

OPERATION 4. MILLING BOTTOM

Transformation—See Fig. 1121. Machine Used—Pratt & Whitney No. 2 Lincoln type. Number of Machines per Operator—Two. Work-Holding Devices—On stud clamped with vise jaws. Tool-Holding Devices—Standard arbor. Cutting Tools—Milling cutters, see Fig. 1123. Number of Cuts—One. Cut Data—30 r.p.m.; ⅝-in. feed. Coolant—Compound, ¼-in. stream. Average Life of Tool Between Grindings—5,000 pieces. Gages—Fig. 1124. Production—125 per hr.

OPERATION CC. REMOVING BURRS LEFT BY OPERATION 4

Number of Operators—One. Description of Operation—Removing burrs thrown up by operation 4. Apparatus and Equipment Used—File. Production—Grouped with operation 4.

OPERATION 10. COUNTERBORING FRONT OF HUB

Transformation—Fig. 1125. Machine Used—Ames three-spindle 16-in. upright. Number of Operators per Machine—One. Work-Holding Devices—Drill jig, Fig. 1126. Tool-Holding Devices—Drill chuck. Cutting Tools—Counterbore, Fig. 1126. Number of Cuts—One. Cut Data—250 r.p.m.; hand feed. Coolant—Cutting oil, ⅛-in. stream. Average Life of Tool Between Grinding—3,500 pieces. Gages—Fig. 1127; thickness and diameter of counterbore. Production—300 per hr.

OPERATION 7. HAND-MILLING FOR RIVETING SPINDLE

Transformation—Fig. 1128. Machine Used—Garvin No. 3 hand miller, Fig. 1129. Number of Operators per Machine—One. Work-Holding Devices—On stud in indexing fixture; jaw A is operated by cam B; index at C; see Fig. 1129. Tool-

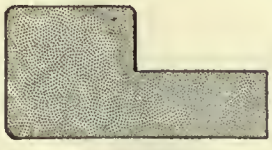

FIG. 1136

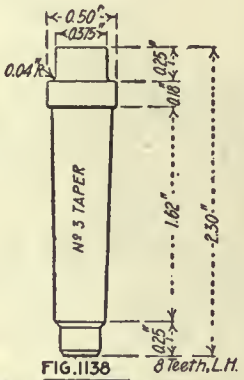

FIG. 1138

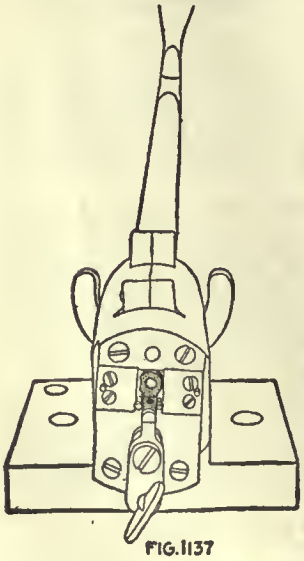

FIG. 1137

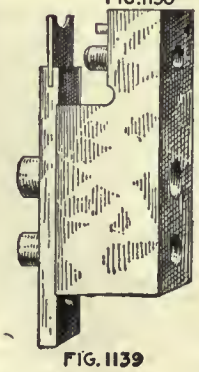

FIG. 1139

OPERATION 14

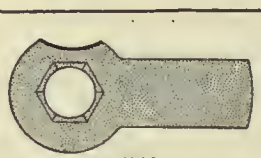

FIG. 1140

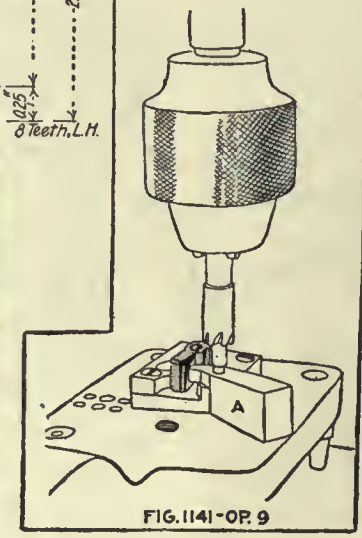

FIG. 1141-OP. 9

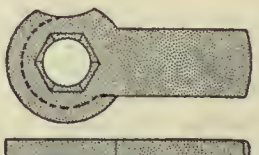

FIG. 1142

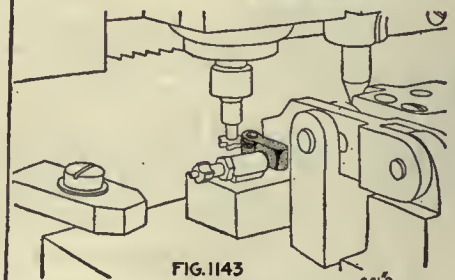

FIG. 1143

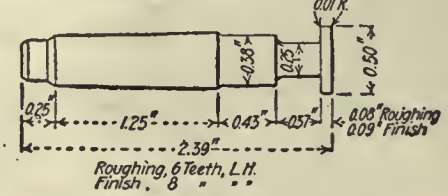

FIG. 1144-OP. 15

Holding Devices—Taper shank. Cutting Tools—Milling cutter, Fig. 1130. Number of Cuts—Three. Cut Data—650 r.p.m.; hand feed. Coolant—Cutting oil, put on with brush. Average Life of Tool Between Grindings—5,000 pieces. Gages—None. Production—325 per hr.

OPERATION 11. DRILLING AND REAMING SPRING-SPINDLE HOLE

Transformation—Fig. 1131. Machine Used—Ames two-spindle 14-in. upright drilling machine. Number of Operators per Machine—One. Work-Holding Devices—Drill jig, Figs. 1132 and 1132-A. Tool-Holding Devices—Drill chuck. Cutting Tools—Bottoming reamer. Number of Cuts—Two. Cut Data—600 r.p.m.; hand feed. Coolant—Cutting oil, ⅛-in. stream. Average Life of Tool Between Grindings—250 pieces. Gages—Diameter and depth. Production—75 per hr.

OPERATION 12. HAND-MILLING FRONT AND REAR CORNERS

Transformation—Fig. 1133. Machine Used—Garvin No. 3 hand miller. Number of Operators per Machine—One. Work-Holding Devices—Rotating fixture, Fig. 1134; work held at A by finger clamp B and screw C; rotated by handle D. Tool-Holding Devices—Taper shank. Cutting Tools—Fig. 1135. Number of Cuts—One. Cut Data—450 r.p.m.; hand feed. Coolant—Cutting oil, put on with brush. Average Life of Tool Between Grindings—1,500 pieces. Gages—Form. Production—350 per hr.

OPERATION EE. REMOVING BURRS LEFT BY OPERATION 12

Number of Operators—One. Description of Operation—Removing burrs thrown up by operation 12. Apparatus and Equipment Used—File. Production—Grouped with operation 12.

OPERATION 15. PROFILING SLOT

Transformation—Fig. 1142. Machine Used—Pratt & Whitney No. 1 profiler, Fig. 1143. Work-Holding Devices—Stud and finger clamps. Tool-Holding Devices—Taper shank. Cutting Tools—Milling cutter, Fig. 1144. Number of Cuts—Two. Cut Data—1,200 r.p.m.; hand feed. Coolant—Compound, two ¼-in. streams. Average Life of Tool Between Grindings—200 pieces. Gages—Width and depth of groove. Production—75 per hr.

OPERATION 13. HAND-MILLING REAR CAM

Transformation—Fig. 1145. Machine Used—Whitney hand miller. Number of Operators per Machine—One. Work-Holding Devices—On stud by screw clamp, Fig 1146. Tool-Holding Devices—Taper shank. Cutting Tools—Small milling cutter. Number of Cuts—One. Cut Data—900 r.p.m.; hand feed. Coolant—Cutting oil, put on with brush. Average Life of Tool Between Grindings—3,500 pieces. Gages—See Fig. 1150. Production—350 per hr.

OPERATION 16. MILLING FRONT CAM (ON DRILLING MACHINE)

Transformation—Fig. 1147. Machine Used—Ames 16-in. single-spindle upright drilling machine, Fig. 1148. Number of Operators per Machine—One. Work-Holding Devices—Rotating jig. Tool-Holding Devices—Taper shank. Cutting Tools—Milling cutter, Fig. 1149. Number of Cuts—Three. Cut Data—1,800 r.p.m.; hand feed. Coolant—Cutting oil, put on with brush. Average Life of Tool Between Grindings—350 pieces. Gages—Fig. 1150; A, gaging rear cam; B, gaging front cam. Production—75 per hr.

OPERATION 6. STAMPING "READY" AND "SAFE"

Machine Used—Snow-Brooks press, 1-in. stroke, Fig. 1151. Number of Operators per Machine—One. Punches and Punch Holders—Square shank; stamps "Ready" and "Safe," Fig. 1152. Dies and Die Holders—Centered on pin. Average Life of Punches—Indefinite; been used three years already. Production—400 per hr.

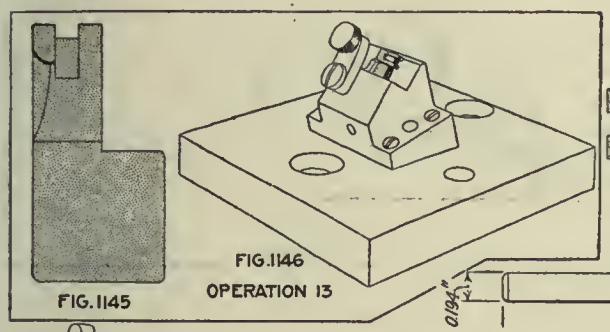

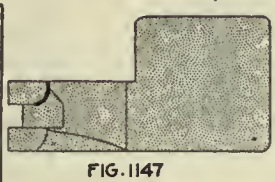
FIG.1147

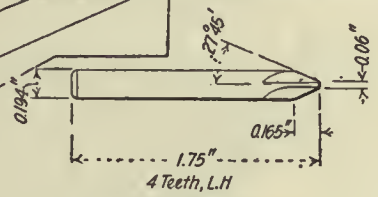

FIG.1149

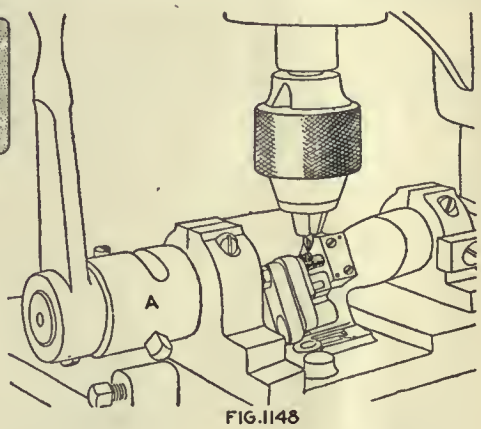

FIG.1148

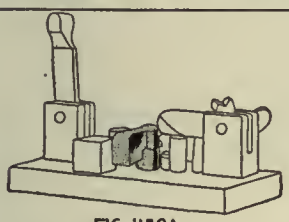
FIG.1150A

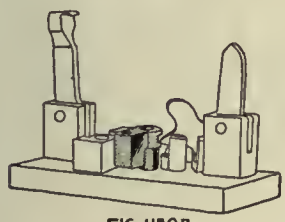
FIG.1150B

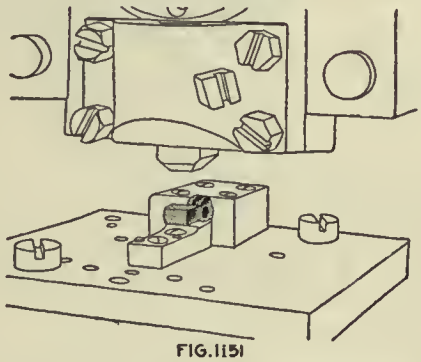
FIG.1151

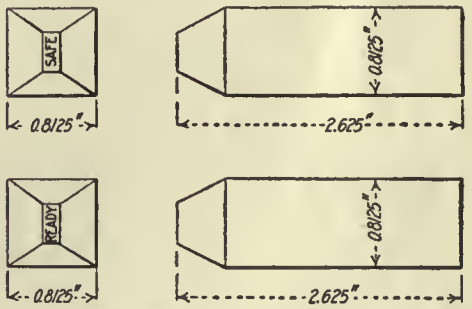

FIG.1152

OPERATION 16

OPERATION 14. HAND-MILLING CIRCLE OVER SPRING-SPINDLE HOLE

Transformation—Fig. 1136. Machine Used—Garvin No. 3 hand miller. Number of Operators per Machine—One. Work-Holding Devices—On stud in rotating fixture, Fig. 1137. Tool-Holding Devices—Taper shank. Cutting Tools—Milling cutter, Fig. 1138. Number of Cuts—One. Cut Data—450 r.p.m.; hand feed. Coolant—Cutting oil, put on with brush. Average Life of Tool Between Grindings—1,500 pieces. Gages—Fig. 1139. Production—350 per hr.

OPERATION 9. JIG-MILLING CLEARANCE FOR COCKING PIECE

Transformation—Fig. 1140. Machine Used—Ames three-spindle 16-in. drill. Number of Operators per Machine—One. Work-Holding Devices—Drill jig, Fig. 1141; pilot of counterbore fits a hardened bushing in the jig. Tool-Holding Devices—Drill chuck. Cutting Tools—Counterbore with pilot. Number of Cuts—One. Cut Data—650 r.p.m.; hand feed. Coolant—Cutting oil, ⅛-in. stream. Average Life of Tool Between Grindings—3,500 pieces. Gages—None. Production—250 per hr.

OPERATION FF. REMOVING BURRS LEFT BY OPERATION 9

Number of Operators—One. Description of Operation—Removing burrs thrown up by operation 9. Apparatus and Equipment Used—File. Production—Grouped with operation 9.

OPERATION 8. HAND-MILLING REAR END TO FINISH

Transformation—Fig. 1153. Machine Used—Whitney hand miller. Number of Operators per Machine—One. Work-Holding Devices—Vise jaws, Fig. 1154. Tool-Holding Devices—Taper shank. Cutting Tools—Milling cutter, 1.25 in. in diameter, 0.5 in. wide. Number of Cuts—One. Cut Data—450 r.p.m.; hand feed. Coolant—Cutting oil, put on with brush. Average Life of Tool Between Grindings—3,500 pieces. Gages—Length, Fig. 1155; work goes over a stud. Production—250 per hr.

OPERATION GG. REMOVING BURRS FROM SPRING-SPINDLE HOLE

Number of Operators—One. Description of Operation—Removing burrs thrown up around spring hole. Apparatus and Equipment Used—Scraper. Production—Grouped with operation 8.

OPERATION 17. COUNTERSINKING SPRING-SPINDLE HOLE

Number of Operators—One. Description of Operation—Removing sharp corners. Apparatus and Equipment Used—Speed lathe and countersink. Production—425 per hr.

OPERATION 18. POLISHING SIDES, LOWER END AND OVER CIRCLE

Number of Operators—One. Description of Operation—Polishing all outside surfaces. Apparatus and Equipment Used—Polishing jack and wheel. Production—50 per hr.

OPERATION 19. FILING, GENERAL CORNERING, MATCHING MILLING CUTS FRONT OF JOINT

Number of Operators—One. Description of Operation—General filing and cornering. Apparatus and Equipment Used—File. Production—125 per hr.

OPERATION 20. CASEHARDEN

Number of Operators—One. Description of Operation—Packed in ¾ bone and ¼ leather; heated in oil furnace to 750 deg. C. (1,382 deg. F.) for 2½ hr.; quenched in water. Apparatus and Equipment Used—Rockwell furnaces.

OPERATION 21. ASSEMBLING WITH SPINDLE, SPRING AND SPRING SPINDLE

Transformation—Fig. 1156. Number of Operators—One. Description of Operation—Assembling spindle and spring. Apparatus and Equipment Used—Special press, Fig. 1157. Production—50 per hr.

OPERATION 22. POLISHING REAR END

Number of Operators—One. Description of Operation—Polishing rear end. Apparatus and Equipment Used—Polishing jack and wheel. Production—1,200 per hr.

OPERATION 23. ETCHING REAR END

Number of Operators—One. Description of Operation—Same as cocking piece. Production—700 per hr.

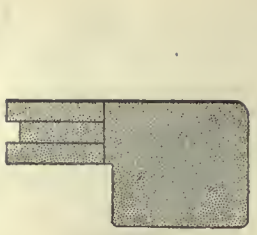

FIG. 1153

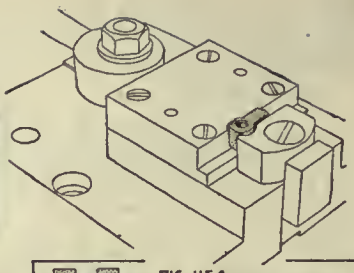

FIG 1154

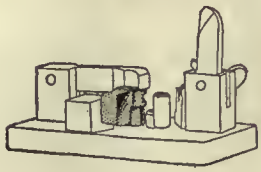

FIG. 1155, OP. 8

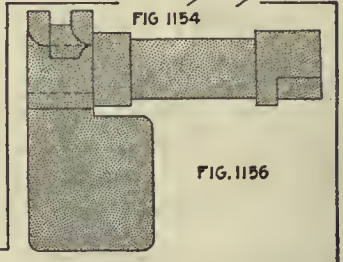

FIG. 1156

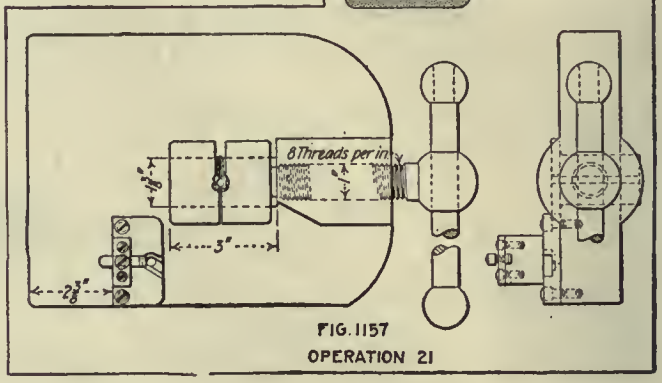

FIG. 1157
OPERATION 21

Making the Guard

While this piece carries the sear and trigger mechanism as well as the magazine, it is under no particular stress from the firing of the cartridge. It is, however, a rather intricate piece on account of its being finished all over, and particularly because of the very thin walls of the magazine. These as well as the trigger guard and other parts are all carefully profiled.

It would be difficult to design a piece of this kind which would be more difficult or more expensive to make than this, nor one which presents greater possibilities for reducing these difficulties by a little re-designing, without affecting the action of the rifle in the least.

The guard, which forms the body for the magazine, is shown in detail in Fig. 1158. This is a drop forging that weighs 3½ lb. After machining, it weighs less than ½ lb. It is made from Class D steel, and its dimensions are $1\frac{5}{8}$x$1\frac{3}{16}$ in. Its main parts are the trigger-guard bow *A*, front tang *B*, rear tang *C*, front screw stud *D*, magazine walls *E*, rear end of magazine *F*, floor-plate pin hole *G*,

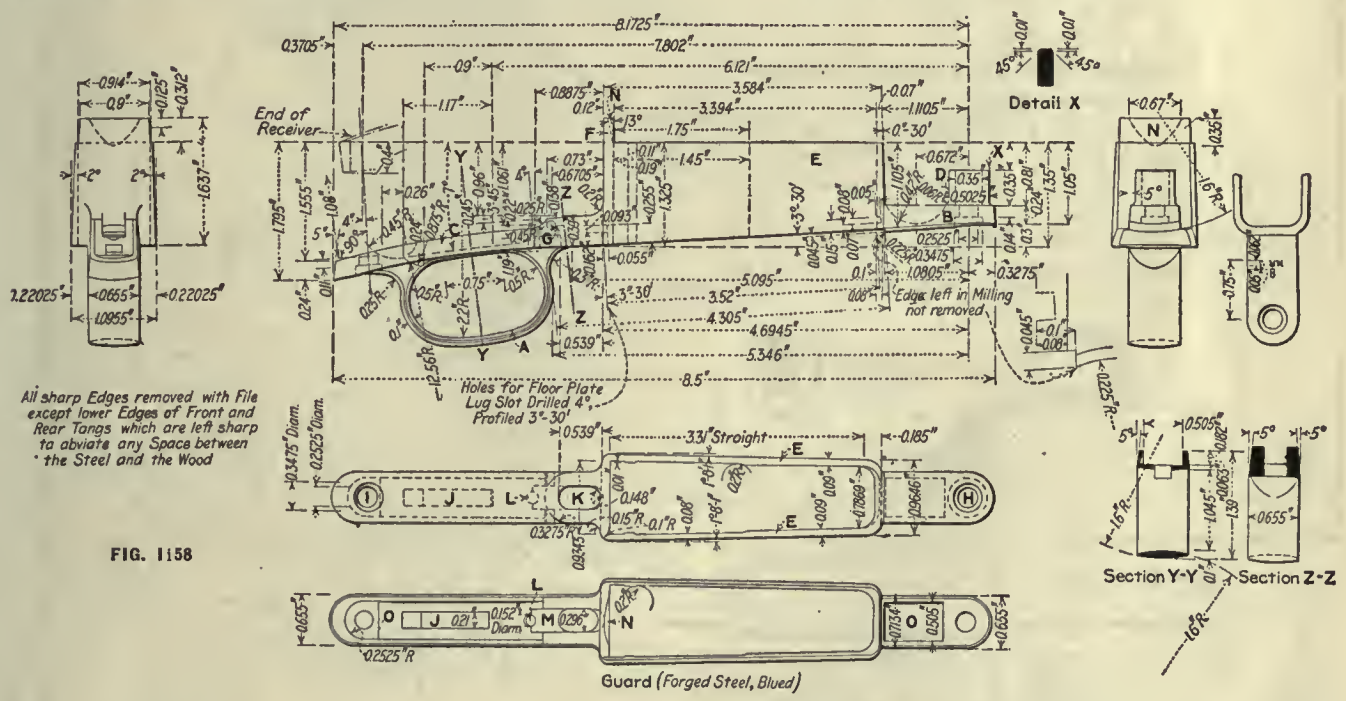

FIG. 1158

front guard-screw hole *H*, rear guard-screw hole *I*, trigger slot *J*, floor-plate lug slot *K*, floor-plate spring hole *L*, floor-plate catch slot *M*, ramp *N* and the lightening cuts *O*.

The working points are the top and bottom of the magazine walls *E* and the front and rear guard-screw holes *H* and *I*. As the walls are very thin after being profiled, a steel block is used to fill the space between the walls so as to avoid springing in some of the clamping operations. The guard is finished by bluing.

OPERATIONS ON THE GUARD

Operation	
A-1	First blocking from billet
B	First dropping
B-1	Pickling
C	Trimming
D	Dropping to finish
D-1	Pickling
E	First trimming (inside of bow)
E-1	Second trimming (outside)
F	Cold dropping and straightening
1	Milling top crosswise
2	Milling left side crosswise
3	Milling right side crosswise
4	Milling bottom crosswise
4½	Burring operations 2, 3 and 4
5	Milling top of tangs crosswise
5¼	Burring operation 5
6	Drilling, reaming and counterboring guard-screw holes and drilling for floor-plate lug
7	Spotting two holes for magazine opening, drilling for floor-plate catch pin and counterboring for floor-plate lug
8	Drilling to remove stock for magazine opening
9	Milling to remove stock from top of magazine opening
10	Milling to remove stock from bottom of magazine opening
11	Profiling rough to remove stock from magazine opening
12	Profiling inside of magazine to finish
13	Shaving rear end of magazine opening
13½	Filing to finish operation 13
14	Drilling floor-plate catch-spring cavity and counterboring for head of guard screw, rear
15	Hollow-milling and counterboring front guard-screw stud
16	Hand-milling to remove stock in rear of front guard-screw stud
17	Profiling outside of guard bow
18	Profiling inside of guard bow
19	Milling lightening cut in top of rear tang
21	Profiling floor-plate lug slot and rear-end floor-plate seat
22	Hand-milling slot recess for floor-plate catch
23	Hand-milling trigger slot
24	Milling bottom of guard for floor-plate seat
24½	Burring for operation 24 and broaching operation 23
25 and 26	Profiling recesses for floor-plate tenons in front of magazine opening and in floor-plate lug slot
27	Hand straddle-milling sides of projecting rear magazine wall
28	Hand-milling ramp cut in rear magazine wall
29	Profiling edges of guard bow and of front and rear tangs
30	Milling edge of tangs
31	Milling left side of tangs
32	Milling bevel on outside of right wall of magazine
33	Milling bevel on outside of left wall of magazine
33½	Counterboring guard-screw holes to finish and reaming floor-plate catch-pin hole
34	Filing, general
35	Polishing
36	Filing, cornering
37	Bluing

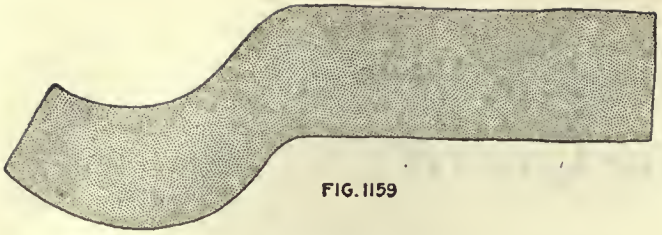

FIG. 1159

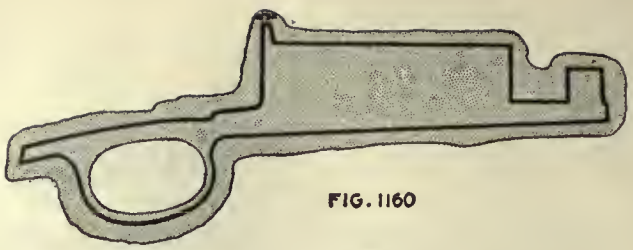

FIG. 1160

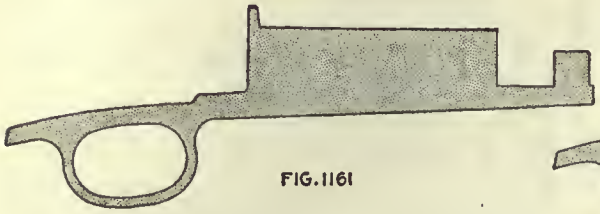

FIG. 1161

FIG. 1162

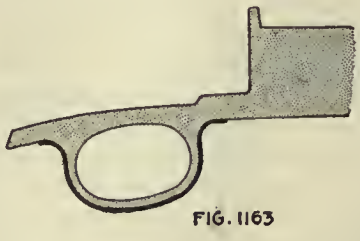

FIG. 1163

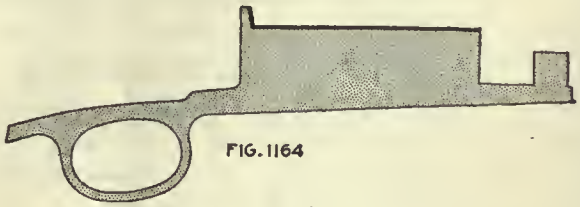

FIG. 1164

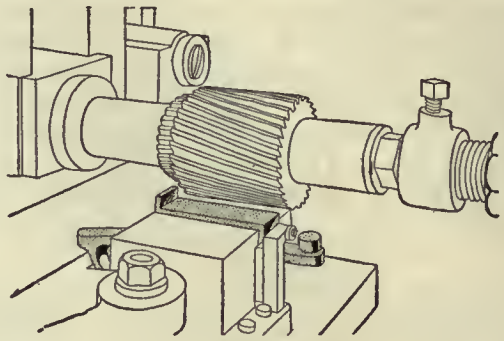

FIG. 1165

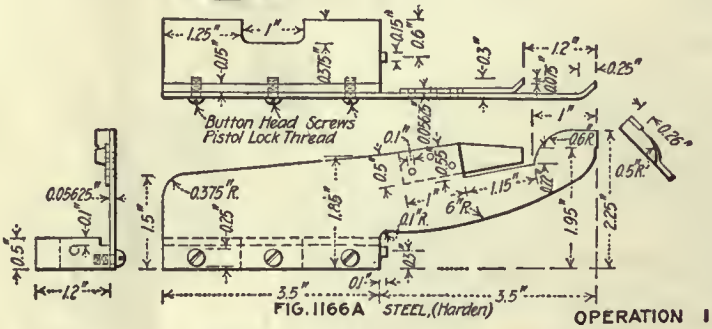

FIG. 1166 A STEEL, (Harden)

OPERATION 1

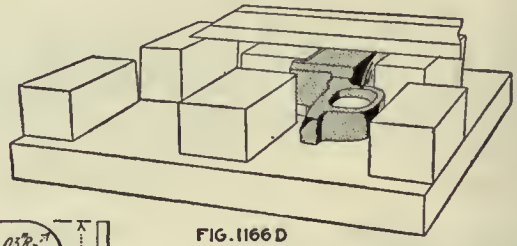

FIG. 1166 D

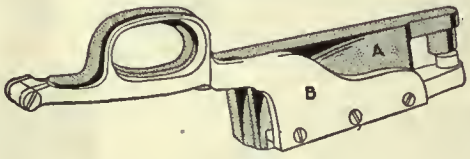

FIG. 1166 C

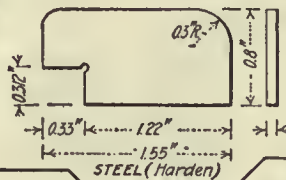

STEEL (Harden)

FIG. 1166 B

FIG. 1167

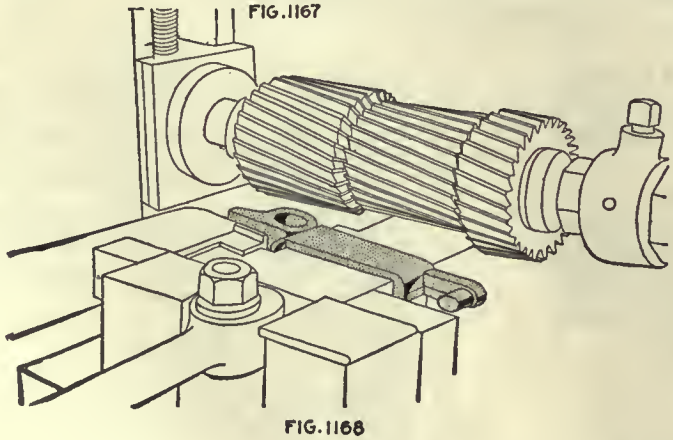

FIG. 1168

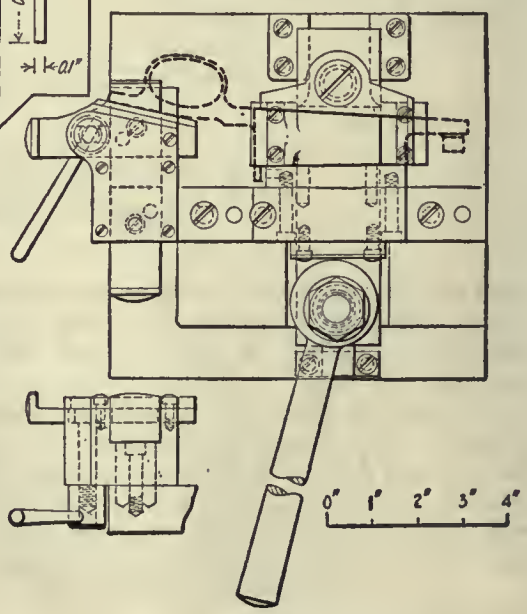

FIG. 1169

OPERATION 2

OPERATION A. FIRST BLOCKING FROM BILLET

Transformation—Fig. 1159. Number of Operators—One. Description of Operation—Shaping from billet. Apparatus and Equipment Used—Billings & Spencer 1,000-lb. drop hammer. Production—40 per hr.

OPERATION B. FIRST DROP FORGING

Transformation—Fig. 1160. Number of Operators—One. Description of Operation—Drop forging to shape. Apparatus and Equipment Used—Billings & Spencer 1,000-lb. drop hammer. Production—35 per hr.

OPERATION B-1. PICKLING

Number of Operators—One. Description of Operation—Placed in wire baskets in the pickling solution, which consists of 1 part sulphuric acid and 9 parts water, and left from 10 to 12 min. Apparatus and Equipment Used—Wire baskets, wooden pickling tanks, hoists.

OPERATION C. TRIMMING

Transformation—Fig. 1161. Machine Used—Bliss press, 3½-in. stroke. Number of Operators per Machine—One. Punches and Punch Holders—Square shank. Dies and Die Holders—In shoe by setscrew. Stripping Mechanism—Punch down through die. Average Life of Punches and Dies—15,000 pieces. Production—Grouped with operation B.

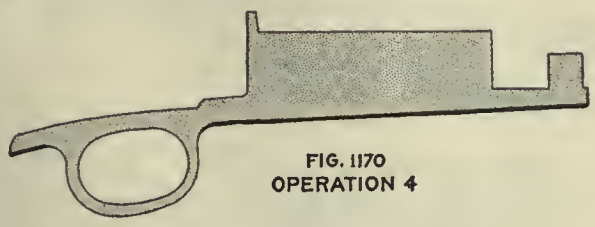

FIG. 1170
OPERATION 4

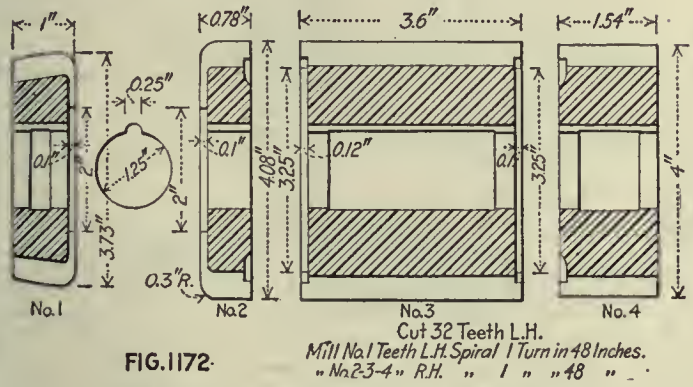

FIG. 1172.

OPERATION D. DROPPING TO FINISH

Number of Operators—One forger and one helper. Description of Operation—Finished drop forging; simply sizes the guard to closer limits than first dies. Apparatus and Equipment Used—Billings & Spencer 1,000-lb. drop hammer. Production—50 per hr.

OPERATION D-1. PICKLING

Number of Operators—One. Description of Operation—Same as previous pickling operation.

OPERATION E. FIRST TRIMMING (INSIDE OF BOW)

Transformation—Fig. 1162. Machine Used—Bliss back-geared press. Number of Operators per Machine—One. Punches and Punch Holders—Square shank. Dies and Die Holders—In shoe by setscrew. Stripping Mechanism—Piece of stock screwed to shoe in back of punch. Average Life of Punches—20,000 pieces. Production—450 per hr.

OPERATION E-1. SECOND TRIMMING (OUTSIDE)

Transformation—Fig. 1163. Machine Used—Bliss back-geared press. Number of Operators per Machine—One. Punches and Punch Holders—Square shank. Dies and Die Holders—In shoe by setscrew. Stripping Mechanism—Punched down through die. Average Life of Punches and Dies—1,500 pieces. Production—400 per hr.

OPERATION F. COLD DROPPING AND STRAIGHTENING

Number of Operators—One. Description of Operation—Straightening after being trimmed. Apparatus and Equipment Used—Billings & Spencer 400-lb. drop hammer. Production—300 per hr.

OPERATION 1. MILLING TOP CROSSWISE

Transformation—Fig. 1164. Machine Used—Pratt & Whitney No. 2 Lincoln miller. Number of Machines per Operator—Four. Work-Holding Devices—In vise jaws, Fig. 1165. Tool-Holding Devices—Standard arbor. Cutting Tools—Two spiral mills, one 3.375 in. diam. by 3.75 in. long; one 2.75 in. diam., 0.50 in. long; 30 teeth left hand. Number of Cuts—One. Cut Data—60 r.p.m.; ⅝-in. feed. Coolant—Cutting oil, two ⅛-in. streams. Average Life of Tool Between Grindings—3,500 pieces. Gages—Fig. 1166; A, surface and projection with relation to underside of guard; B, thickness of projection; C, contour of tang to see if it will finish up in future operations; if not, a little bending is permissible at this stage of the process; D, squareness of sides. Production—20 per hr.

OPERATION 2. MILLING LEFT SIDE CROSSWISE

Transformation—Fig. 1167. Machine Used—Pratt & Whitney No. 2 Lincoln miller. Number of Operators per Machine—One. Work-Holding Devices—Vise jaws, Fig. 1168; details in Fig. 1169. Tool-Holding Devices—Standard arbor. Cutting Tools—Interlocking milling cutter 3.22 in. diam., center cutter 2.78 in. diam., 28 teeth, left-hand spiral, one turn in 48 in., right hand. Number of Cuts—One. Cut Data—60 r.p.m.; ⅝-in. feed. Coolant—Cutting oil, two ⅛-in. streams. Average Life of Tool Between Grindings—3,500 pieces. Gages—A form gage with guard laid on side. Production—20 per hr.

OPERATION 3. MILLING RIGHT SIDE CROSSWISE

Transformation—Fig. 1167. Machine Used—Pratt & Whitney No. 2 Lincoln miller. Number of Operators per Machine—One. Work-Holding Devices—Vise jaws, same as Fig 1169, but reversed. Tool-Holding Devices—Standard arbor. Cutting Tools—Same as operation 2. Number of Cuts—One. Cut Data—60 r.p.m.; ⅝-in. feed. Coolant—Cutting oil, two ⅛-in. streams. Average Life of Tool Between Grindings—3,500 pieces. Gages—Same as in operation 2. Production—20 per hr.

OPERATION 4. MILLING BOTTOM CROSSWISE

Transformation—Fig. 1170. Machine Used—Pratt & Whitney No. 2 Lincoln miller, Fig. 1171. Number of Machines per Operator—Five. Work-Holding Devices—Special vise jaws. Tool-Holding Devices—Standard arbor. Cutting Tools—Gang mill, Fig. 1172. Number of Cuts—50 r.p.m.; ⅝-in. feed. Cut data—One. Coolant—Cutting oil, ⅛-in. stream. Average

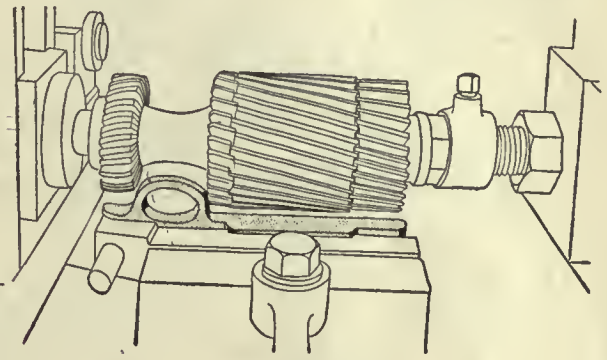

FIG. 1171

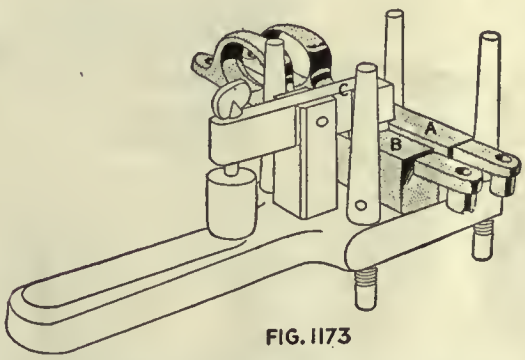

FIG. 1173

Life of Tool Between Grindings—3,500 pieces. Gages—Fig. 1173; a master guard is fastened at A; work is clamped at B by clamp C; gaging is done by laying a straight-edge across the work and the master; can be turned over to gage other sides. Production—20 per hr.

OPERATION 4½. BURRING OPERATIONS 2, 3 AND 4

Number of Operators—One. Description of Operation—Removing burrs thrown up by operations 2, 3 and 4. Apparatus and Equipment Used—File. Production—75 per hr.

OPERATION 5. MILLING TOP OF TANGS CROSSWISE

Transformation—Fig. 1174. Machine Used—Garvin No. 17 miller. Number of Machines per Operator—Four. Work-Holding Devices—Special vise; vise jaws, Fig. 1175. Tool-Holding Devices—Standard arbor. Cutting Tools—Gang of milling cutters, Fig. 1176. Number of Cuts—One. Cut Data—80 r.p.m.; ⅝-in. feed. Coolant—Cutting oil, ⅛-in. stream. Average Life of Tool Between Grindings—3,500 pieces. Gages—For contour, thickness and front tang. Production—20 per hr.

OPERATION 5½. BURRING OPERATION 5

Number of Operators—One. Description of Operation—Removing burrs thrown up by operation 5. Apparatus and Equipment Used—File. Production—125 per hr.

OPERATION 6. DRILLING, REAMING AND COUNTERBORING GUARD-SCREW HOLES AND DRILLING FOR FLOOR-PLATE LUG

Transformation—Fig. 1177. Machine Used—Pratt & Whitney four-spindle 16-in. vertical drilling machine. Number of Operators per Machine—One. Work-Holding Devices—Drill jig, Fig. 1178. Tool-Holding Devices—Drill chuck. Cutting Tools—Counterbore for screw hole; reamer for guard-screw hole. Number of Cuts—Four. Cut Data—350 r.p.m.; hand feed. Coolant—Cutting oil, ⅛-in. stream. Average Life of Tool Between Grindings—350 pieces. Gages—Fig. 1179; A, location of holes; B, depth of counterbores gaged from top of guard. Production—15 per hr.

OPERATION 7. SPOTTING TWO HOLES FOR MAGAZINE OPENING, DRILLING FOR FLOOR-PLATE CATCH PIN AND COUNTERBORING FOR FLOOR-PLATE LUG

Transformation—Fig. 1180. Machine Used—Dwight Slate 16-in. three-spindle drilling machine. Number of Operators per Machine—One. Work-Holding Devices—Drill jig, Fig. 1181; details in Fig. 1182. Tool-Holding Devices—Drill chuck. Cutting Tools—Twist drills. Number of Cuts—One. Cut Data—600 r.p.m.; hand feed. Coolant—Cutting oil, ⅛-in. stream. Average Life of Tool Between Grindings—350 pieces. Gages—Fig. 1183. Production—35 per hr.

OPERATION 8. DRILLING TO REMOVE STOCK FOR MAGAZINE OPENING

Transformation—Fig. 1184. Machine Used—Pratt & Whitney 16-in. vertical drilling machine. Number of Machines per Operator—Two, one front and one rear. Work-Holding Devices—Drill jig, Fig. 1185. Tool-Holding Devices—Taper shank. Cutting Tools—Twist drill. Number of Cuts—Two.

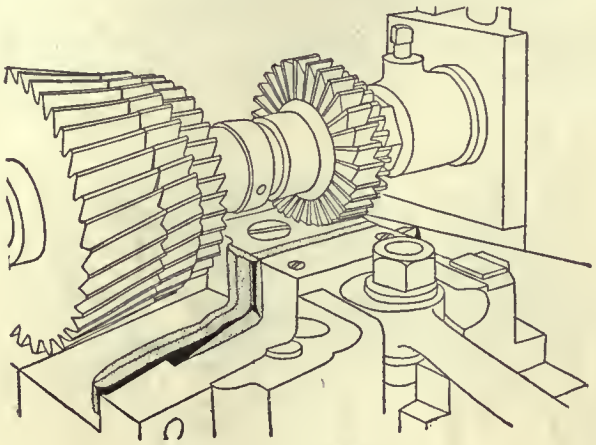

FIG. 1175

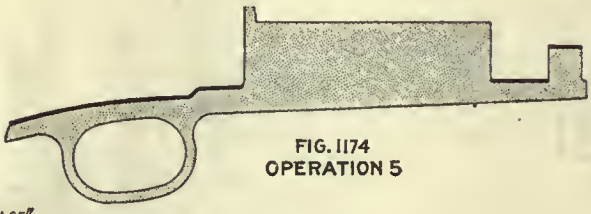

FIG. 1174
OPERATION 5

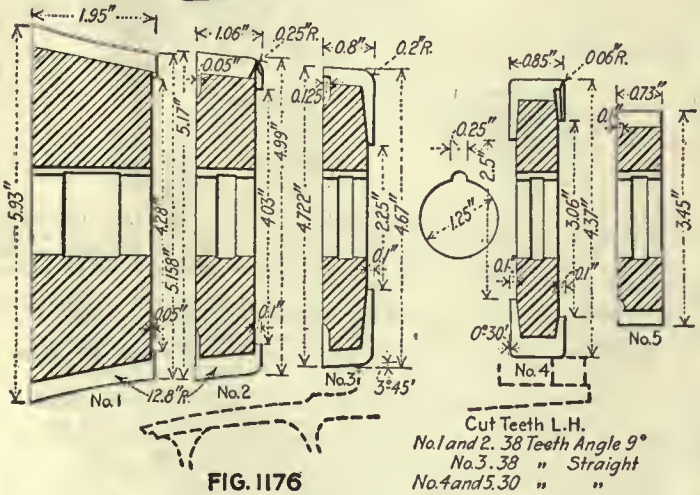

FIG. 1176

Cut Data—350 r.p.m.; ⅜-in. feed. Coolant—Compound, ¼-in. stream. Average Life of Tool Between Grindings—150 pieces. Gages—None. Production—85 per hr.

OPERATION 9. MILLING TO REMOVE STOCK FROM TOP OF MAGAZINE OPENING

Transformation—Fig. 1186. Machine Used—Pratt & Whitney No. 2 Lincoln miller. Number of Machines per Operator—Six. Work-Holding Devices—Special vise jaws, Fig. 1187; details in Fig. 1188. Tool-Holding Devices—Standard arbor. Cutting Tools—Milling cutters, 3.56 in. diam., 0.75 in. thick, 28 teeth, left-hand spiral. Number of Cuts—One. Cut Data—60 r.p.m.; ⅝-in. feed. Coolant—Compound, ¼-in. stream. Average Life of Tool Between Grindings—3,500 pieces. Gages—None. Production—30 per hr.

OPERATION 10. MILLING TO REMOVE STOCK FROM BOTTOM OF MAGAZINE OPENING

Transformation—Fig. 1189. Machine Used—Pratt & Whitney No. 2 Lincoln miller. Number of Machines per Operator—Six. Work-Holding Devices—Vise jaws (see Figs. 1187 and 1188). Tool-Holding Devices—Standard arbor. Cutting Tools—See Fig. 1190. Number of Cuts—One. Cut Data—60 r.p.m.; ⅝-in. feed. Coolant—Compound, ¼-in. stream. Average Life of Tool Between Grindings—3,500 pieces. Gages—None. Production—25 per hr.

The guard of the Springfield rifle is a more difficult piece to make than the similar part in the Enfield, largely owing to the latter having a separate magazine of pressed steel. Making this solid with the guard requires drilling the ends, milling out most of the stock with a gashing cutter and finally profiling to shape. The outside of the magazine is finished by milling with large slab cutters.

It will be noted that the first machining operation is to mill the top of the magazine. In the succeeding operations, the guard is forced up against this surface as a locating point, as can be seen in Fig. 1175. Here the upper surface locates against ledges on the sides, which enables the operator to see when the guard is firmly located against this seating point. This requires means for forcing the point up from underneath, care being taken to avoid bending the tang out of shape. This is also looked after in some of the side milling fixtures as in Fig. 1169, and in milling the bottom in Fig. 1171.

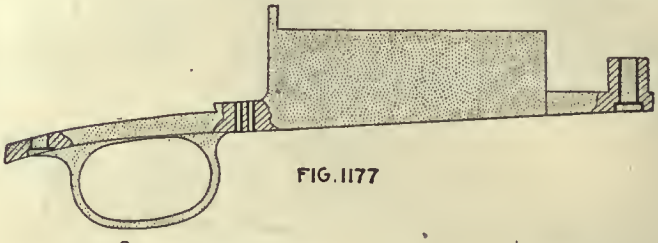

FIG. 1177

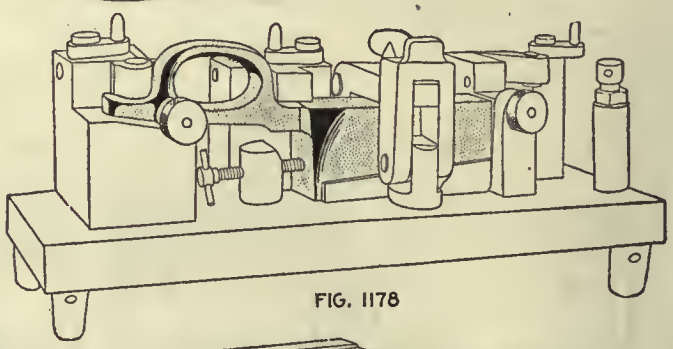

FIG. 1178

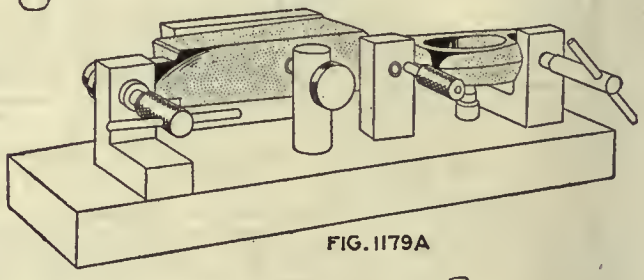

FIG. 1179A

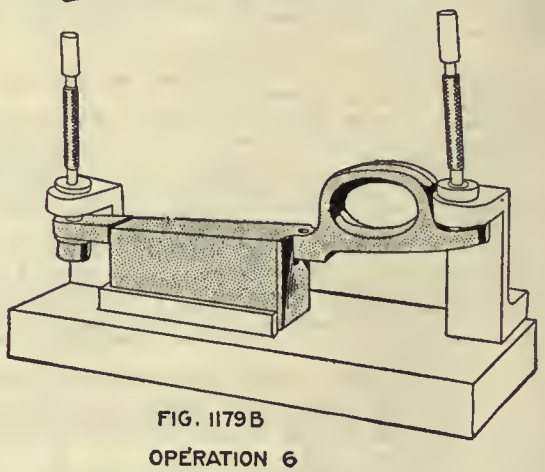

FIG. 1179B
OPERATION 6

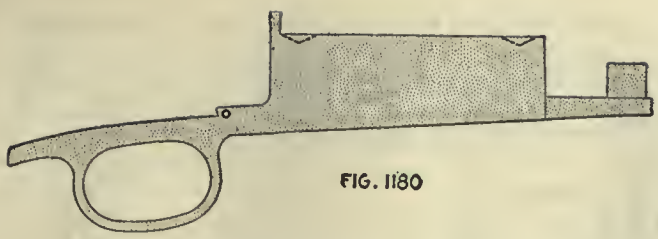

FIG. 1180

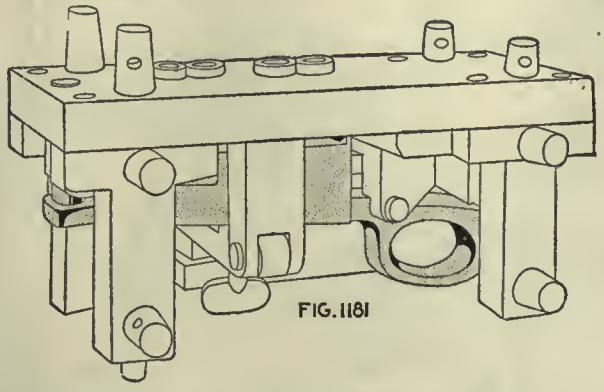

FIG. 1181

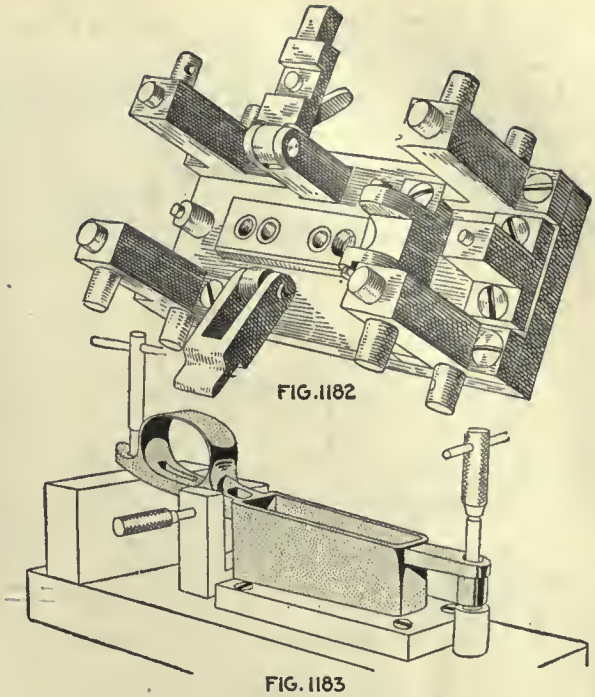

FIG. 1182

FIG. 1183
OPERATION 7

This operation has a rather unusual method of gaging as seen in Fig. 1173. The master guard or sample *A* is fastened to the fixture and the work *B* is clamped in place by *C*. A straight-edge is then laid across the bottom of the guards to see how they compare. This can also be rolled over to see how they compare in other ways.

Milling the top and bottom requires rather complicated gangs of cutters, both of these being shown, with dimensions, as the contours are quite particular owing to the fit in the stock. These are all interlocking cutters as can be seen.

The drilling jigs locate from the top also. The holes at each end for the screws are drilled and counterbored in Fig. 1178, the two end holes for the floor-plate lug opening being drilled at this setting. These are gaged in Figs. 1179-A and 1179-B; the first gages the location of the holes and the latter the depth of the counterbores.

The drilling of the end holes for removing the stock from the magazine is also on a "holding up" fixture, the magazine portion of the guard being supported by the crossarm underneath. Next, the center portion is almost entirely cut away by sinking in a milling cutter as previously mentioned. The back end is shaved or slotted as shown in Fig. 1197.

Another fixture where the guard is pressed up against the top guides is shown in Fig. 1201. Fig. 1202 shows one of the few indicating gages. This gages the height of the tang seat for the rear screw thimble, with regard to the top of the guard, where it fits against the bottom of the receiver. The need of this measurement is to prevent the back end of the tang from being drawn out of shape.

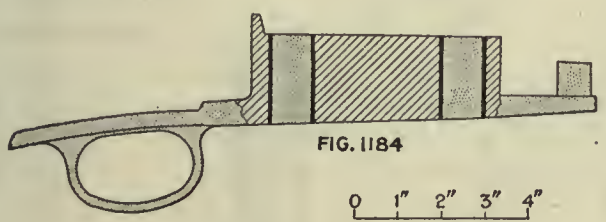

FIG. 1184

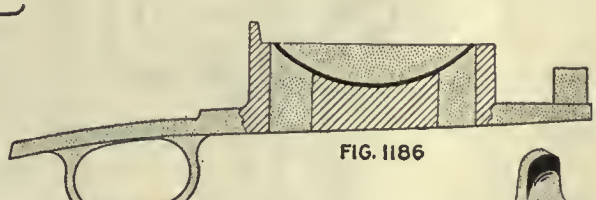

FIG. 1186

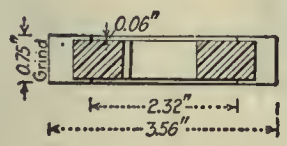

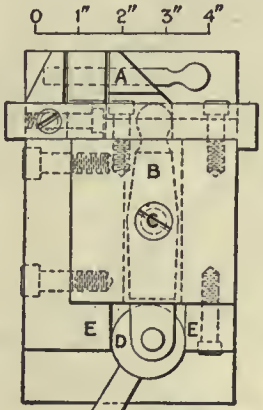

FIG. 1188

NOTE:
FIG. 1184, 1185-OP. 8
FIG. 1186, 1187, 1188-OP. 9
FIG. 1189, 1190-OP. 10

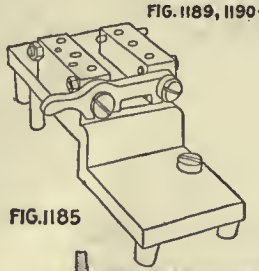

FIG. 1185

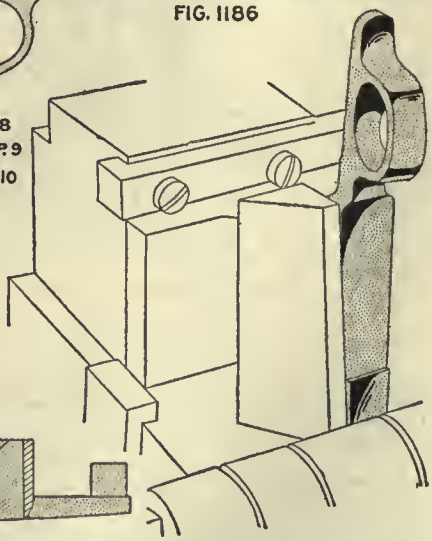

FIG. 1187

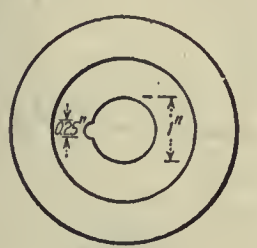

FIG. 1190

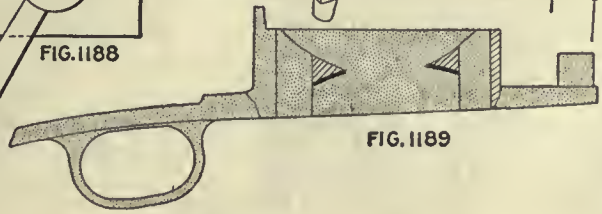

FIG. 1189

OPERATION 11. PROFILING ROUGH, TO REMOVE STOCK FROM MAGAZINE OPENING

Transformation—Fig. 1191. Machine Used—Pratt & Whitney No. 2 profiler. Number of Operators per Machine—One. Work-Holding Devices—Clamped by vise jaws; located by pin A, Fig. 1192. Tool-Holding Devices—Taper shank. Cutting Tools—Milling cutters. Number of Cuts—Two. Cut Data—1,200 r.p.m.; hand feed. Coolant—Compound, ¼-in. stream. Average Life of Tool Between Grindings—200 pieces. Production—15 per hr.

FIG. 1191

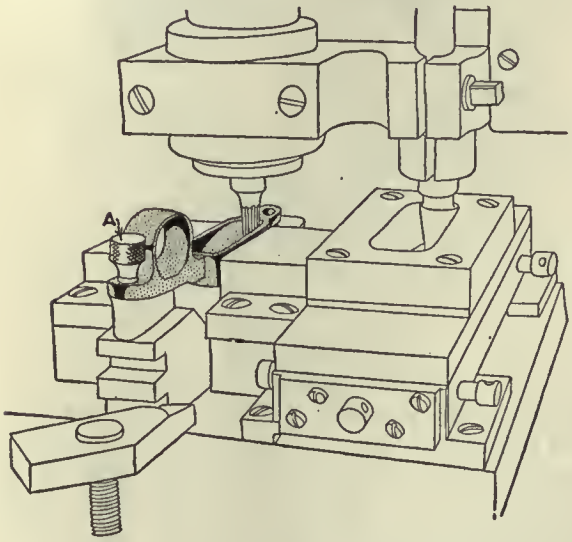

FIG. 1192

OPERATION 12. PROFILING INSIDE OF MAGAZINE TO FINISH

Transformation—Similar to Fig. 1191. Machine Used—Pratt & Whitney No. 2 profiler. Number of Operators per Machine—One. Work-Holding Devices—See Fig. 1192. Tool-Holding Devices—Taper shank. Cutting Tools—Roughing and finishing cutters; same as operation 11. Number of Cuts—Two. Cut Data—1,200 r.p.m.; hand feed. Coolant—Compound, ¼-in. stream. Average Life of Tool Between Grindings—250 pieces. Gages—Figs. 1193 to 1195; pins locating guard on gage, opening is compared with hole in gage; plug for hole through guard; form of end. Production—20 per hr.

OPERATION 13. SHAVING REAR END OF MAGAZINE

Transformation—Fig. 1196. Machine Used—Bement-Miles slotter, 24-in. table. Number of Operators per Machine—One. Work-Holding Devices—Clamped by vise jaws; located by pin, Fig. 1197. Tool-Holding Devices—Regular holder. Cutting Tools—Shaving tool, Fig. 1198. Number of Cuts—One. Cut Data—50 strokes; hand feed. Coolant—Cutting oil, ⅛-in. stream. Average Life of Tool Between Grindings—150 pieces. Gages—Form, Fig. 1199. Production—35 per hr.

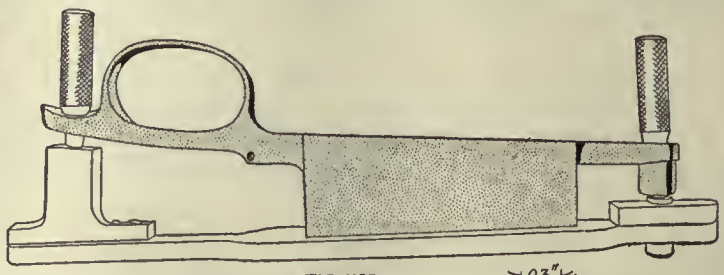

FIG. 1193

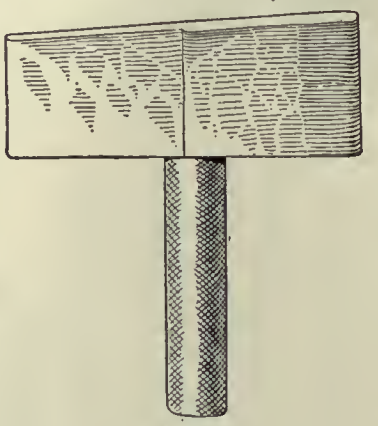

FIG. 1194

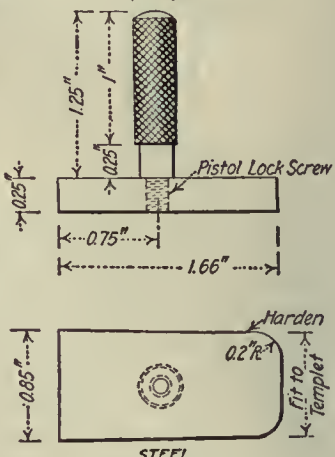

FIG. 1195

OPERATION 11

OPERATION 12

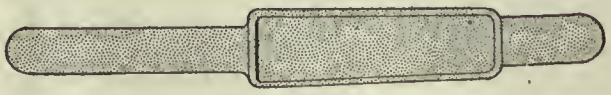

FIG. 1196

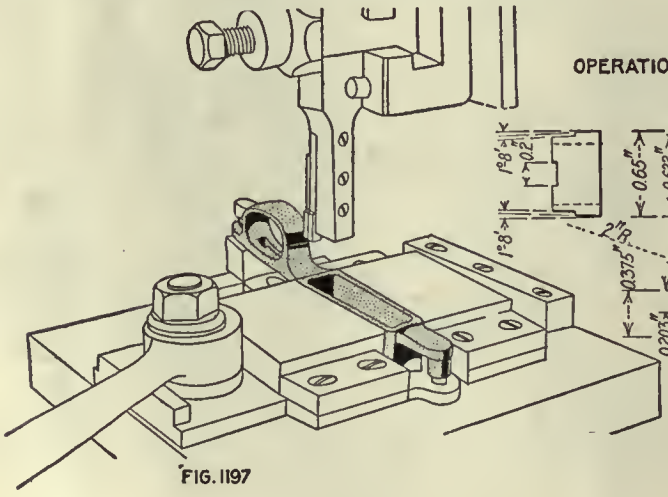

FIG. 1197

OPERATION 13

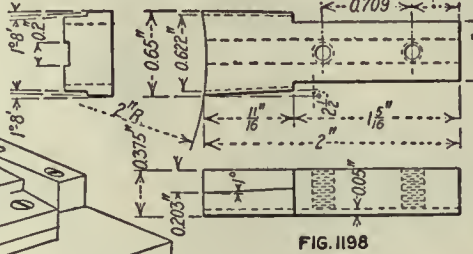

FIG. 1198

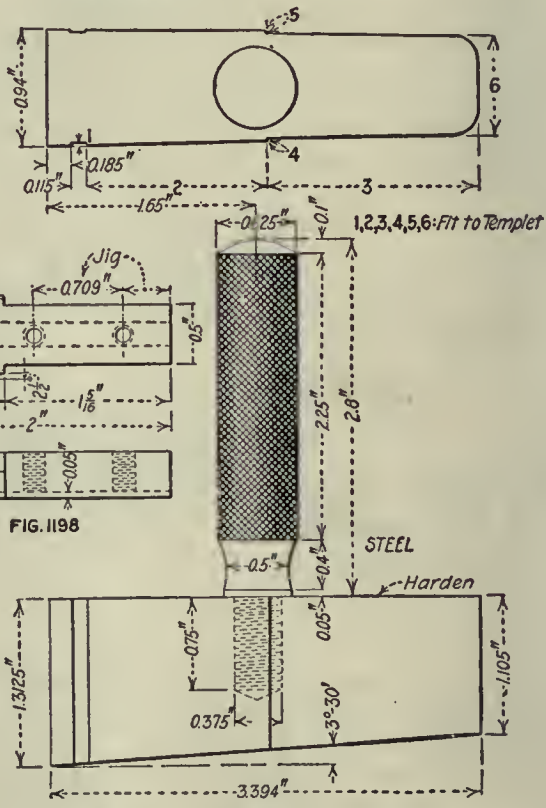

FIG. 1199

OPERATION 13½. FILING TO FINISH OPERATION 13

Number of Operators—One. Description of Operation—Operation 13 leaves the piece rough, and 13½ smooths it up. Apparatus and Equipment Used—File. Production—125 per hr.

OPERATION 14. DRILLING FLOOR-PLATE CATCH-SPRING CAVITY AND COUNTERBORING FOR HEAD OF REAR GUARD SCREW

Transformation—Fig. 1200. Machine Used—Dwight-Slate three-spindle 16-in. vertical drilling machine. Number of Operators per Machine—One. Work-Holding Devices—Drill jig, Fig. 1201; guard is held down by latch A, is supported by wedge B and held sidewise by thumb-screw C and D. Tool-Holding Devices—Drill chuck. Cutting Tools—Counterbore and drill. Number of Cuts—Two. Cut Data—Speed of drill, 600 r.p.m.; speed of counterbore, 450 r.p.m. Coolant—Cutting oil, $\frac{1}{16}$-in. stream. Average Life of Tool Between Grindings—350 pieces. Gages—Fig. 1202, needle gage for locating rear screw hole from the magazine opening; also, gage for catch-spring cavity. Production—50 per hr.

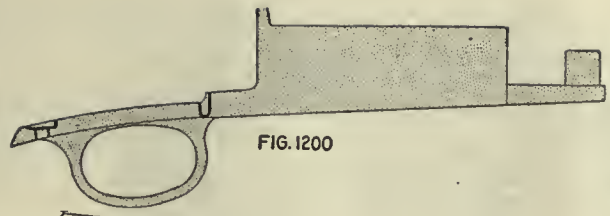

FIG. 1200

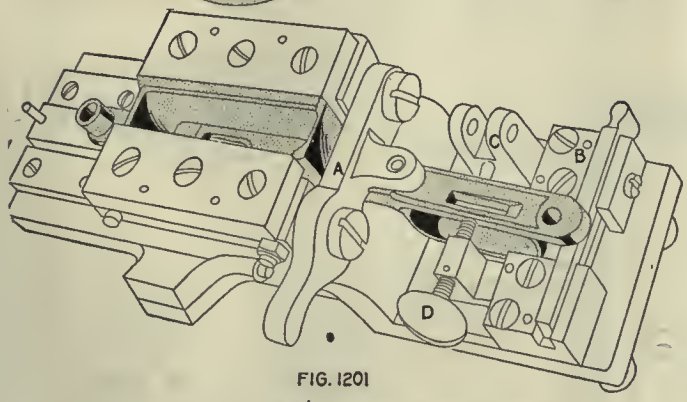

FIG. 1201

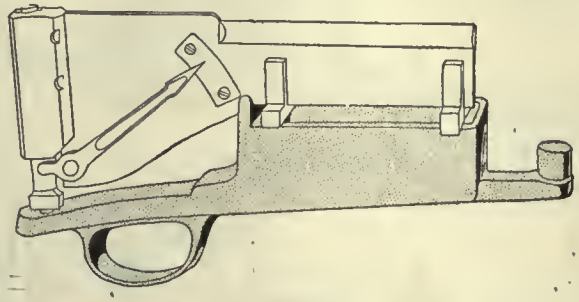

FIG. 1202

OPERATION 14

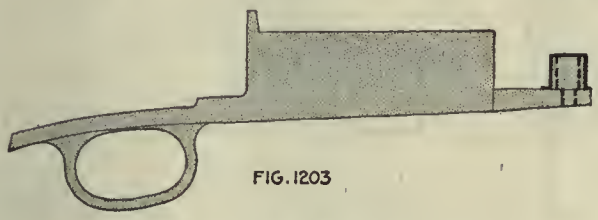

FIG. 1203

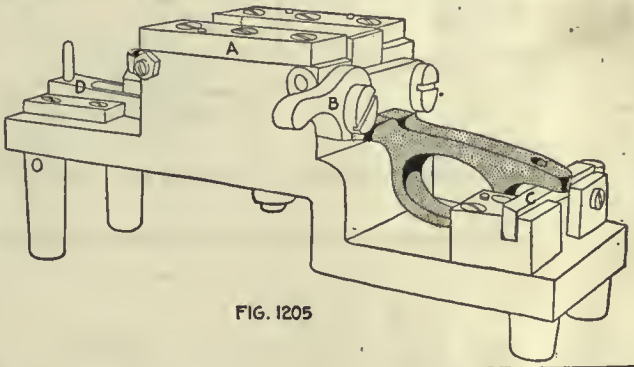

FIG. 1205

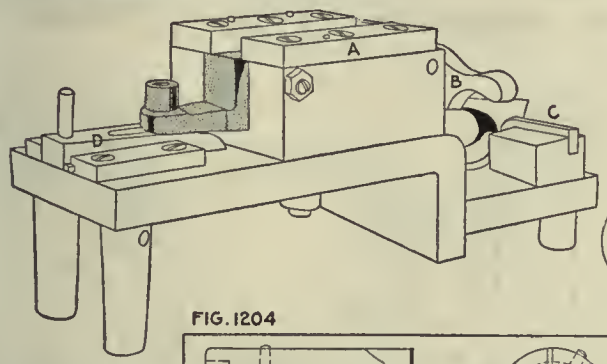

FIG. 1204

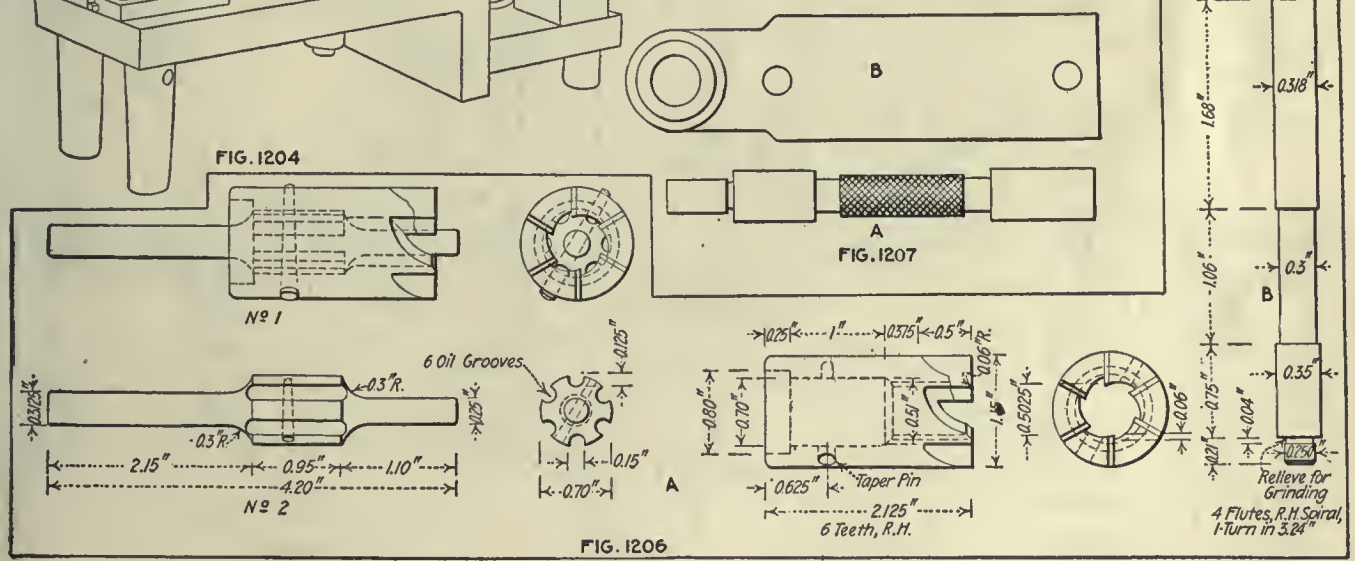

FIG. 1206

OPERATION 15

The operations here illustrated show more of the fixtures for holding the work up against a plate or plates, so as to locate by the upper edge. A good example of this is shown in Figs. 1204 and 1205, which are two views of the same fixture to show exactly how the wedging up is accomplished in this particular case. Here the lips, or top plates, *A* form the upper clamping surface, the guard being forced up in front by the wedge *D* while the tang rests on the plate *C* at the other end.

OPERATION 15. HOLLOW-MILLING TO REMOVE STOCK IN REAR OF FRONT GUARD-SCREW STUD

Transformation—Fig. 1203. Machine Used—Dwight-Slate 16-in. three-spindle upright. Number of Operators per Machine—One. Work-Holding Devices—Drill jig, Figs. 1204 and 1205; guard is pressed up against ledges A by wedges C and D; latch B locates guard endwise. Tool-Holding Devices—Drill chuck. Cutting Tools—Fig. 1206; A, counterbore; B, facing counterbore; hollow mill for outside. Number of Cuts—Three. Cut Data—Speed of counterbore, 450 r.p.m.; speed of hollow mill, 350 r.p.m. Coolant—Cutting oil, $\frac{1}{16}$-in. stream. Average Life of Tool Between Grindings—350 pieces. Gages—Fig. 1207; A, diameter and depth of counterbore; B, outside and length of screw stud. Production—35 per hr.

OPERATION 16. HAND-MILLING TO REMOVE STOCK IN REAR OF FRONT GUARD-SCREW STUD

Transformation—Fig. 1208. Machine Used—Becker-Brainard large hand miller. Number of Operators per Machine—One. Work-Holding Devices—Held upright, clamped by vise jaws, Fig. 1209; guard is located endwise by stops and held up against the top plate by the eccentric A. Tool-Holding Devices—Taper shank. Cutting Tools—Milling cutter, 0.84 in. diam., 0.505 in. wide, solid on shank. Number of Cuts—One. Cut Data—450 r.p.m.; hand feed. Coolant—Cutting oil, ⅛-in. stream. Average Life of Tool Between Grindings—2,500 pieces. Gages—Thickness of walls beside lightening cut. Production—85 per hr.

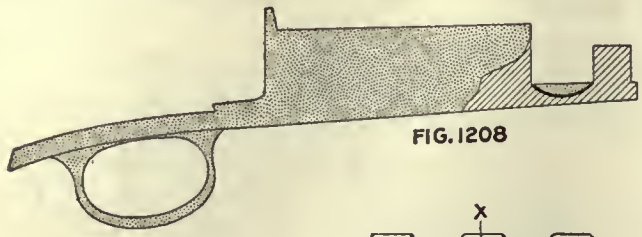

FIG. 1208

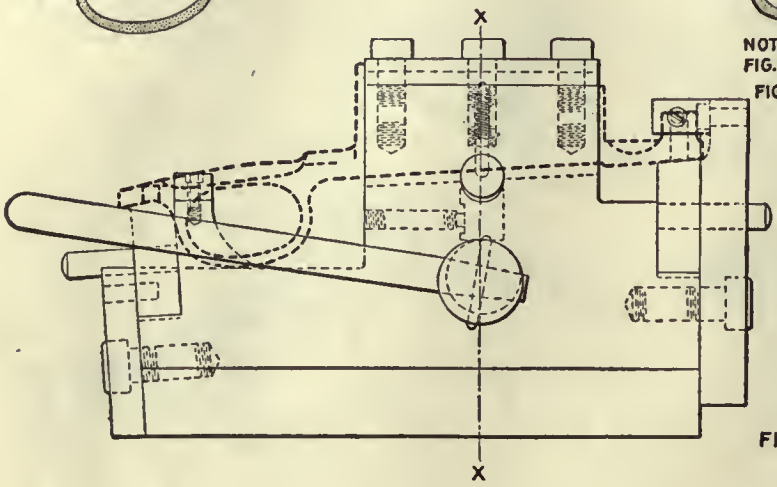

FIG. 1209

NOTE:
FIG. 1208, 1209 - OP. 16
FIG. 1210, 1211, 1212, 1213 OP. 17

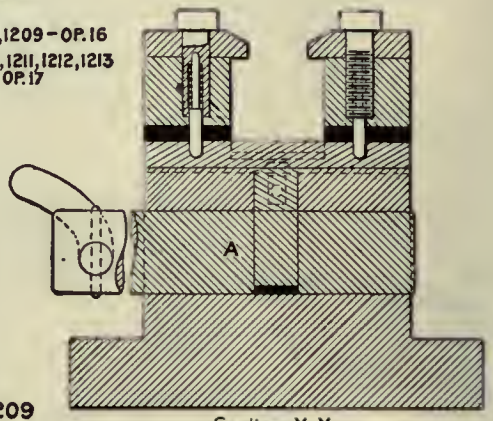

Section X-X

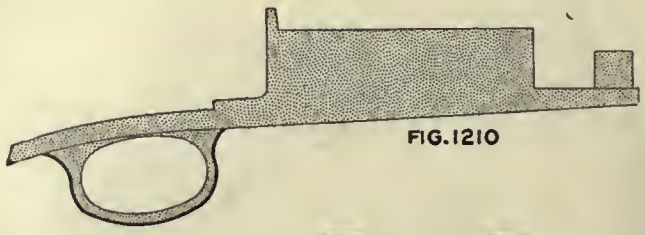

FIG. 1210

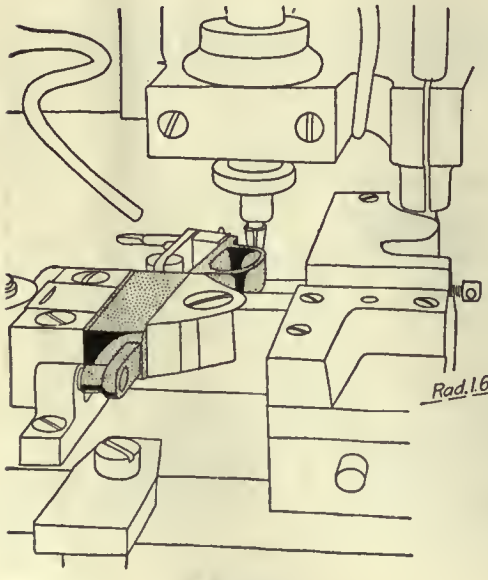

FIG. 1211

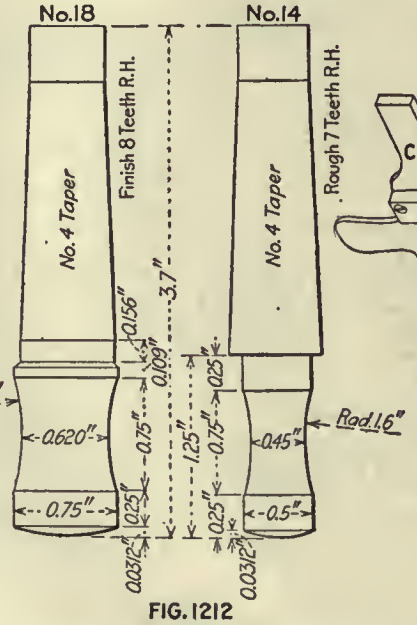

FIG. 1212

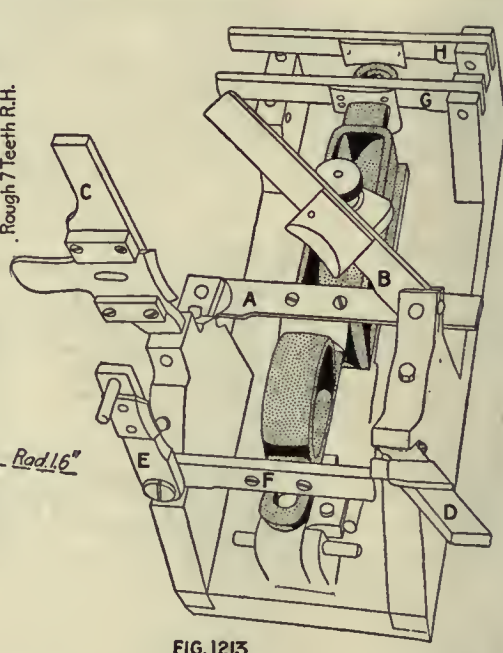

FIG. 1213

OPERATION 17. PROFILING OUTSIDE OF GUARD BOW

Transformation—Fig. 1210. Machine Used—Pratt & Whitney No. 2 profiler, Fig. 1211. Number of Operators per Machine—One. Work-Holding Devices—Clamped by vise jaws, located by pins. Tool-Holding Devices—Taper shank. Cutting Tools—Profiling cutter, Fig. 1212. Number of Cuts—Two. Cut Data—1,200 r.p.m.; hand feed. Coolant—Compound, ¼-in. stream. Average Life of Tool Between Grindings—250 pieces. Gages—Form, Fig. 1213; fingers A, B, C and D swing down to stop pins; other fingers E, F, G and H gage later operations. Production—35 per hr.

OPERATION 18. PROFILING INSIDE OF GUARD BOW

Transformation—Fig. 1214. Machine Used—Pratt & Whitney No. 2 profiler. Number of Operators per Machine—One. Work-Holding Devices—Clamped with vise jaws; held on pin, Fig. 1215. Tool-Holding Devices—Taper shank. Cutting Tools—Similar to Fig. 1212. Number of Cuts—Two. Cut Data—1,200 r.p.m.; hand feed. Coolant—Compound. ¼-in. stream. Average Life of Tool Between Grindings—250 pieces. Gages—Fig. 1216, form of opening; also gage for thickness of trigger guard. Production—30 per hr.

OPERATION 19. MILLING LIGHTENING CUT IN TOP OF REAR TANG

Transformation—Fig. 1217. Machine Used—Pratt & Whitney No. 2 Lincoln miller. Number of Machines per Operator—Four. Work-Holding Devices—Held in fixture, Fig. 1218; clamped at top and bottom of magazine against plates A, by cam B; back end is supported by wedge C; this is mounted on elevating table, shown in Fig. 1219, which brings the guard up against the cutter. Tool-Holding Devices—Taper shank. Cutting Tools—Milling cutter, 0.90 in. diam., 0.505 in. wide, solid on shank. Number of Cuts—One. Cut Data—60 r.p.m.; ⅝-in. feed. Coolant—Compound, ¼-in. stream. Average Life of Tool Between Grindings—3,500 pieces. Gages—Form, Fig. 1220. Production—9 per hr. per machine.

OPERATION 21. PROFILING FLOOR-PLATE LUG SLOT AND REAR-END FLOOR-PLATE SEAT

Transformation—Fig. 1221. Machine Used—Pratt & Whitney No. 2 profiler. Number of Operators per Machine—One. Work-Holding Devices—Held on pins; clamped with jaws, Fig. 1222; work held upside down against plates A; locating points, B and C; profiling form D for finishing; arm E swings over and is used for the roughing cut. Tool-Holding Devices—Taper shank. Cutting Tools—Straight profiling cutter, 0.25 in. diam.; solid on No. 3 taper shank. Number of Cuts—Two. Cut Data—1,200 r.p.m.; hand feed. Coolant—Compound, ¼-in. stream. Average Life of Tool Between Grindings—200 pieces. Gages—Fig. 1223, form of slot. Production—40 per hr.

The profiling for the inner surface of the low, or trigger, guard is shown in Fig. 1215. The holding fixture is the same and the cutter very similar. The guide for the profiling is of course of slightly different contour; the gage is simply a flat disk of proper shape mounted on the tang, the miller table feeds it under the cutter. The gage, Fig. 1220, shows when the cut is correct.

The profiling of the next operation, represented by Fig. 1222, shows one of the little kinks developed in connection with various kinds of work. There are two cuts, a

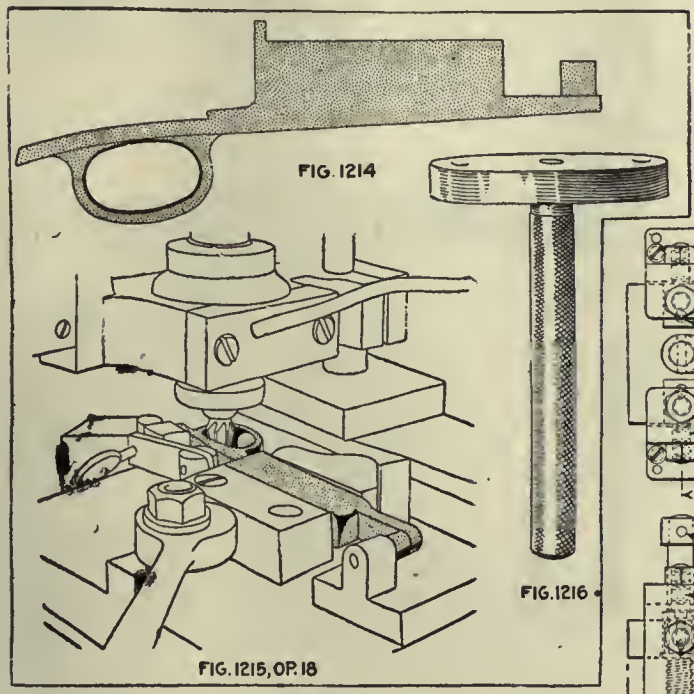

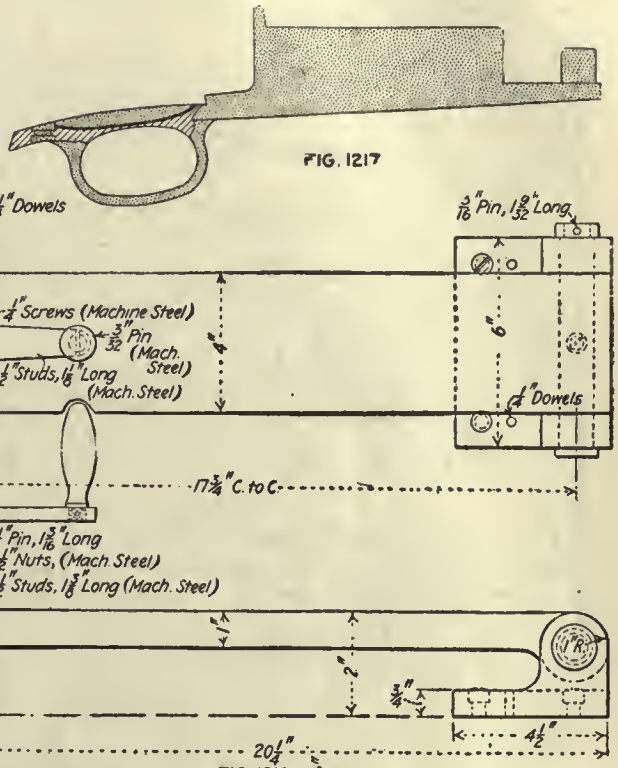

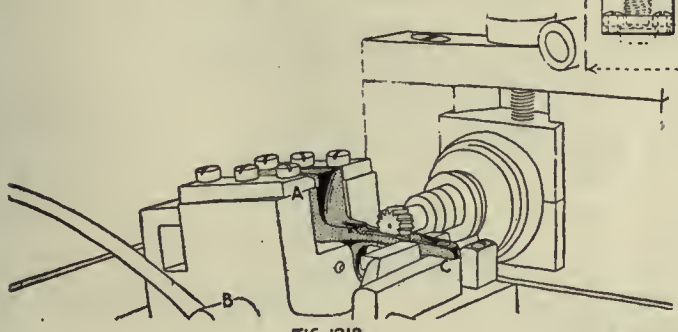

OPERATION 19

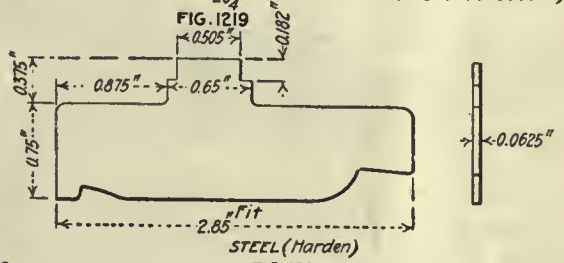

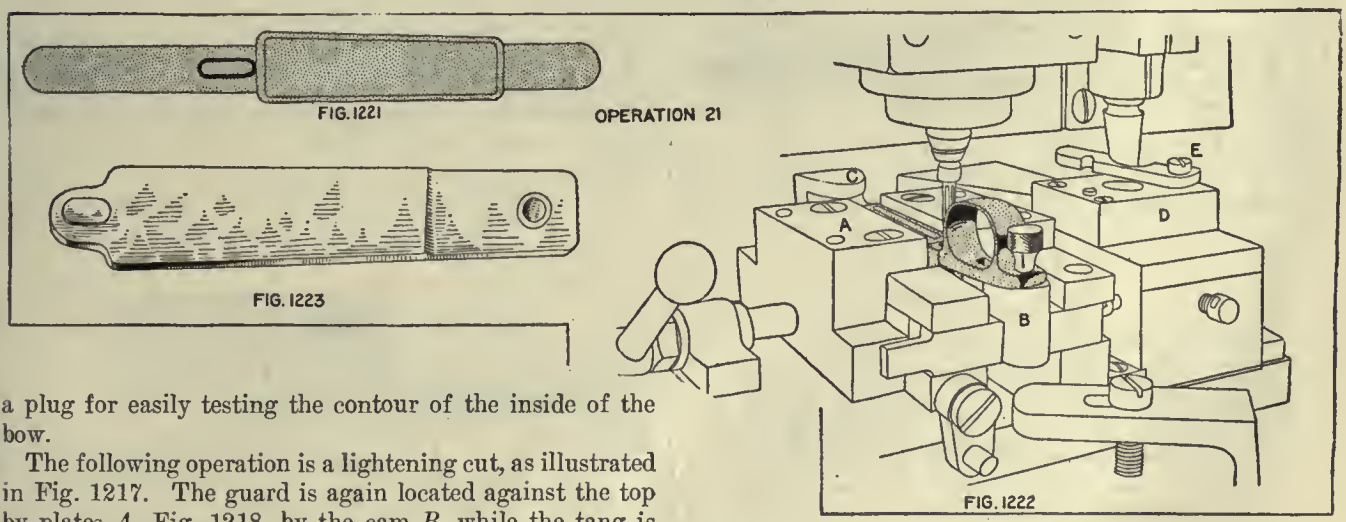

OPERATION 21

a plug for easily testing the contour of the inside of the bow.

The following operation is a lightening cut, as illustrated in Fig. 1217. The guard is again located against the top by plates *A*, Fig. 1218, by the cam *B*, while the tang is supported as at *C*. This involves the use of the elevating table, shown in Fig. 1219. The fixture is mounted on this table; and after the work is clamped in the fixture, the whole attachment is raised into contact with the cutter by raising the end of the elevating table. Then, after the cutter is sunk deep enough into the top of roughing and a finishing, which are controlled by the profiling form *D*. On top of this is an arm or plate *E*, which swings across the opening so as to limit the movement of the guide during the roughing cut. This plate is located, as to position, by the notch shown coming in contact with a pin that projects from the form *D*.

OPERATION 22. HAND-MILLING SLOT RECESS FOR FLOOR-PLATE CATCH

Transformation—Fig. 1224. Machine Used—Whitney hand miller. Number of Operators per Machine—One. Work-Holding Devices—Held on pin; clamped from top and bottom in fixture, Fig. 1225. Tool-Holding Devices—Taper shank. Cutting Tools—Milling cutter, 0.85 in. diam., 0.296 in. wide, solid on No. 4 taper shank. Number of Cuts—One. Cut Data—450 r.p.m.: hand feed. Coolant—Cutting oil, ⅛-in. stream. Average Life of Tool Between Grindings—2,500 pieces. Gages—Flat for width and depth. Production—100 per hr.

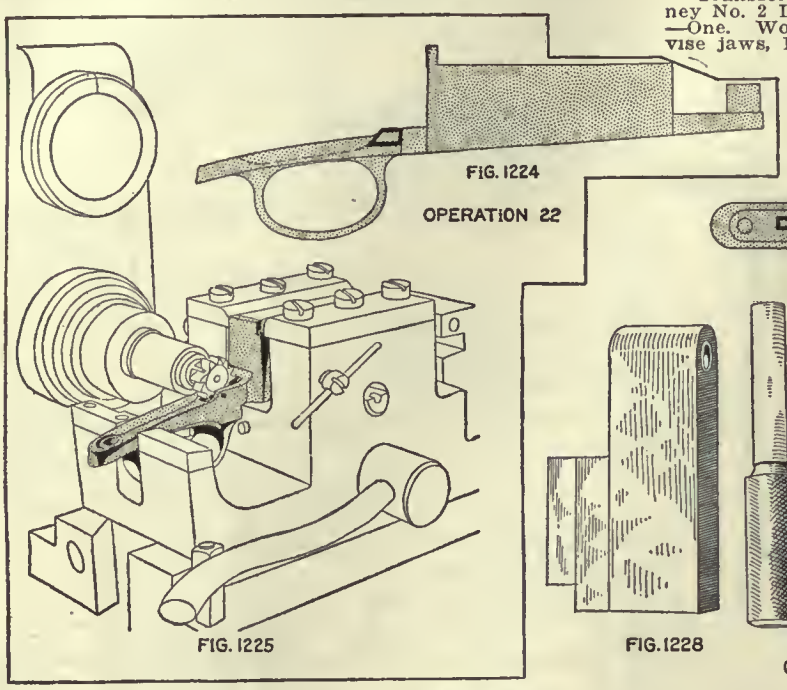

OPERATION 23. HAND-MILLING TRIGGER SLOT

Transformation—Fig. 1226. Machine Used—Whitney hand miller. Number of Operators per Machine—One. Work-Holding Devices—Held on pin A against upper plate B, Fig. 1227. Tool-Holding Devices—Taper shank, threaded arbor. Cutting Tools—Slotting cutter, 1.75 in. diam., 0.21 in. wide, threaded for arbor. Number of Cuts—One. Cut Data—350 r.p.m.; hand feed. Coolant—Cutting oil, ⅛-in. stream. Average Life of Tool Between Grindings—2,500 pieces. Gages—Fig. 1228, locates trigger slot from rear guard-screw hole. Production—100 per hr.

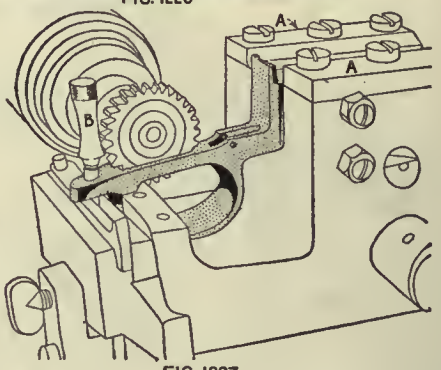

OPERATION 24. MILLING BOTTOM OF GUARD FOR FLOOR-PLATE SEAT

Transformation—Fig. 1229. Machine Used—Pratt & Whitney No. 2 Lincoln miller. Number of Operators per Machine—One. Work-Holding Devices—Located on pin clamped by vise jaws, Fig. 1230. Tool-Holding Devices—Standard arbor. Cutting Tools—Spiral mill, 4x4 in. Number of Cuts—One. Cut Data—60 r.p.m.; ⅝-in. feed. Coolant—Cutting oil, put on with brush. Average Life of Tool Between Grindings—3,500 pieces. Gages—Fig. 1231, placed on a stand gage and straight-edge used as shown; Fig. 1231-A, total length of floor-plate seat. Production—20 per hr. Note—A block is placed in the magazine hole before placing in the fixture, to prevent sides of hole from springing together.

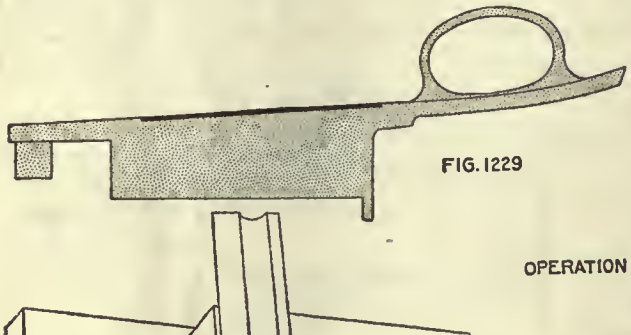

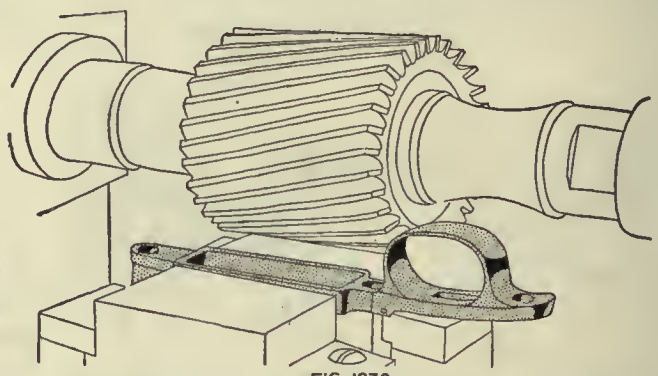

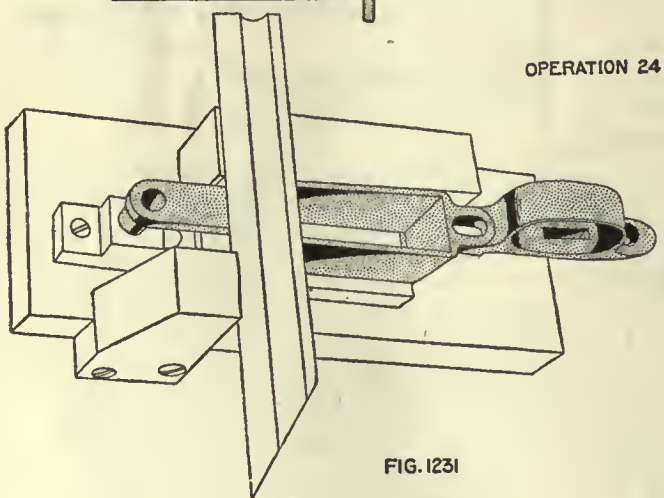

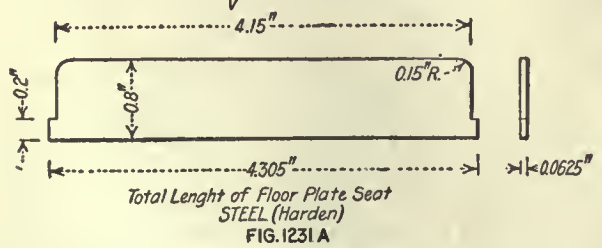

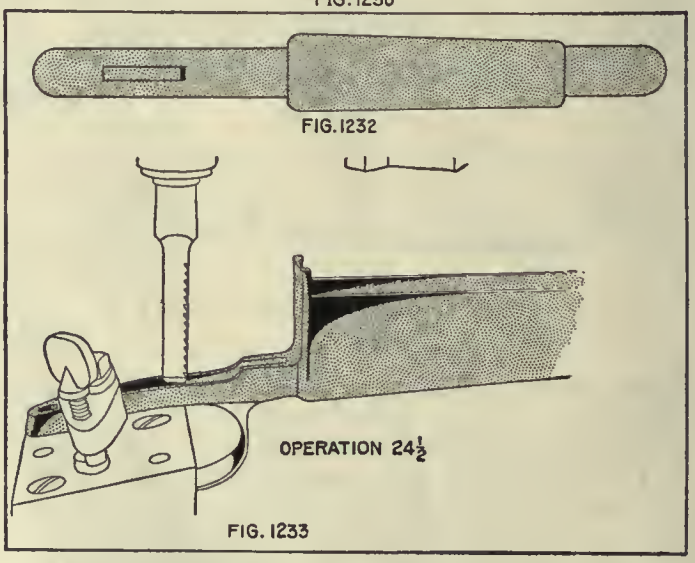

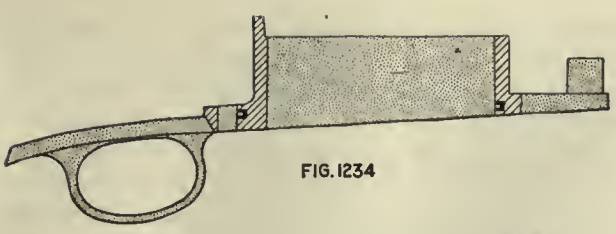

FIG. 1234

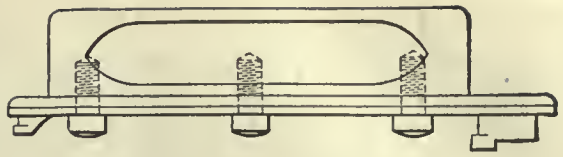

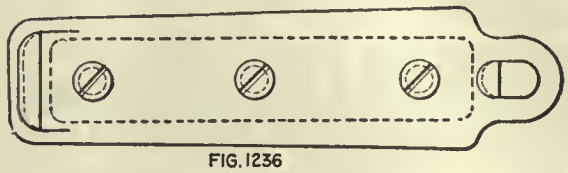

FIG. 1236

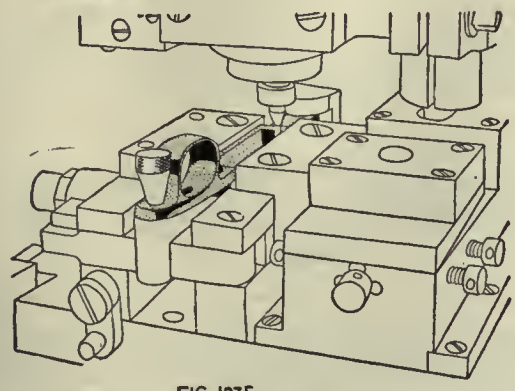

FIG. 1235

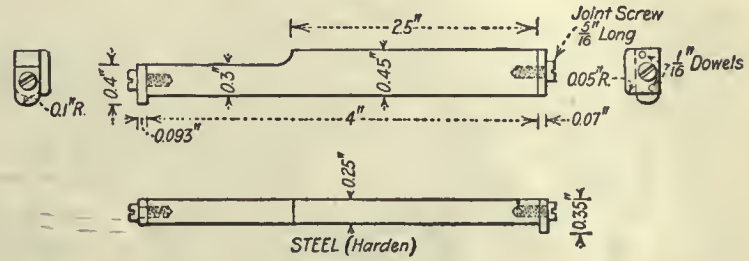

FIG. 1237

OPERATION 25 & 26

OPERATION 24½. BURRING FOR OPERATION 24 AND BROACHING OPERATION 23

Transformation—Fig. 1232. Number of Operators—One. Description of Operation—Burring and broaching forward end of trigger slot, Fig. 1233. Apparatus and Equipment Used—Ames profiler rebuilt for broaching. Gages—None. Production—125 per hr.

OPERATIONS 25 AND 26. PROFILING RECESSES FOR FLOOR-PLATE TENONS IN FRONT OF MAGAZINE OPENING AND IN FLOOR-PLATE LUG SLOT

Transformation—Fig. 1234. Machine Used—Pratt & Whitney No. 2 profiler. Number of Operators per Machine—One. Work-Holding Devices—On pin clamped by vise jaws, Fig. 1235. Tool-Holding Devices—Taper shank. Cutting Tools—Two profiling cutters; No. 1, 0.285 in. diam., 0.093 in. thick; No. 2, 0.385 in. diam., 0.07 in. thick; 6 teeth; both on No. 3 taper shank. Number of Cuts—Two. Cut Data—1,200 r.p.m.; hand feed. Coolant—Compound, two ¼-in. streams. Average Life of Tool Between Grindings—200 pieces. Gages—Figs. 1236 and 1237. Production—35 per hr.

OPERATION 27. HAND STRADDLE-MILLING SIDES OF REAR MAGAZINE WALL

Transformation—Fig. 1238. Machine Used—Brainard large hand miller. Number of Operators per Machine—One. Work-Holding Devices—Held upright; clamped by vise jaws. Tool-Holding Devices—Standard arbor. Cutting Tools—Two side-milling cutters, 3 in. diam., 0.32 in. wide, 26 teeth. Number of Cuts—One. Cut Data—300 r.p.m.; hand feed. Coolant—Cutting oil, ⅛-in. stream. Average Life of Tool Between Grindings—2,500 pieces. Gages—Fig. 1239; located on guard by pins A and B; point C gages width of rear wall, D and E the width of magazine walls; there is also a gage, practically a receiver, that gages outside of magazine portion. Production—100 per hr.

Operations 22 and 23, which give further examples of the type of fixture already described, are shown in Figs. 1225 and 1227. Both of these have to do with the tang, the last breaking through for the trigger. The first operation mills the recess for the floor-plate catch. In operation 23 the guard is held against end movement by the pin *B*, the lips *AA* locating the upper side of the piece. The gage locates the position of the slot from the rear screw hole in the tang.

The milling of the bottom of the guard for the floor-plate seat is illustrated in Fig. 1230, while the method of gaging by the use of a knife straight-edge is shown in Fig. 1231. The side of the gage is of the correct height, and by resting the knife-edge across this raised side the height is easily determined. Most of these straight-edges are made from bayonet blades that have been found defective in some way. They make a very good straight-edge for this and other purposes.

The final cleaning out of the trigger slot is done with a single-sided broach, as shown in Fig. 1233. The work is done in an old Ames profiler, which has been built over for this job. It is virtually a slotting job with a multiple-toothed tool.

Then comes the undercutting of the recesses for holding the floor plate, this being a profiling job and necessitating the use of rather delicate cutters. Here again a pin in the tang screw hole holds the guard against end movement. The gages are virtually duplicates of the completed floor plate.

Another interesting gaging operation is shown in Fig. 1239, after the sides of the rear magazine wall have been straddle-milled, as in Fig. 1238. This gage not only measures the width of this rear wall by the part *C*, Fig. 1239, but also gages the width of the magazine and the location of the wall from the two screw holes as well as the height of the top of the guard from both tangs. It is a simple gage and contains suggestions that can be adopted in other classes of work. The projections *D* and *E* help to locate the gage squarely on the work.

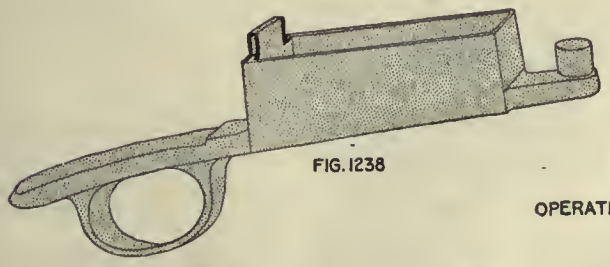

FIG. 1238

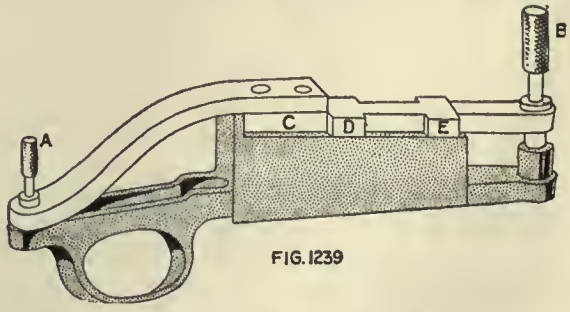

FIG. 1239

OPERATION 27

OPERATION 28. HAND-MILLING RAMP CUT IN REAR MAGAZINE WALL

Transformation—Fig. 1240. Machine Used—Whitney hand miller. Number of Operators per Machine—One. Work-Holding Devices—Held in fixture clamped at top and bottom, pushed to stop at back of magazine hole, Fig. 1241. Tool-Holding Devices—Taper shank. Cutting Tools—Milling cutter, 1.40 in. diam., 0.375 in. wide, solid on No. 4 taper shank. Number of Cuts—One. Cut Data—600 r.p.m.; hand feed. Coolant—Cutting oil, put on with brush. Average Life of Tool Between Grindings—3,500 pieces. Gages—Fig. 1242. Production—100 per hr.

OPERATION 29. PROFILING STRADDLE-MILLING SIDES OF PROJECTING REAR MAGAZINE WALL

Transformation—Fig. 1243. Machine Used—Pratt & Whitney No. 2 profiler. Number of Operators per Machine—One. Work-Holding Devices—Held by pin A; clamped in vise jaws BB, Fig. 1244. Tool-Holding Devices—Taper shank. Cutting Tools—Fig. 1245. Number of Cuts—Two. Cut Data—1,200 r.p.m.; hand feed. Coolant—Compound, two ¼-in. streams. Average Life of Tool Between Grindings—250 pieces. Gages—Fig. 1246, gages sides and ends of guard by fingers A to H. Production—25 per hr.

As an example of the lengths to which the laboratory methods of the average arsenal will lead, the requirements demanded for the outside of the bow over the trigger can hardly be excelled. Both the inside and outside are carefully profiled and the outside, which cannot possibly interfere with the action of the trigger, is gaged for form at four places. It is one of the numerous places where the real use for which the piece was designed, seems to be lost sight of when the limits of accuracy are being set. In a similar way the exact shape of the inside of the bow is unimportant, the only actual requirement being that it does not interfere with either the trigger or the finger which is to pull it.

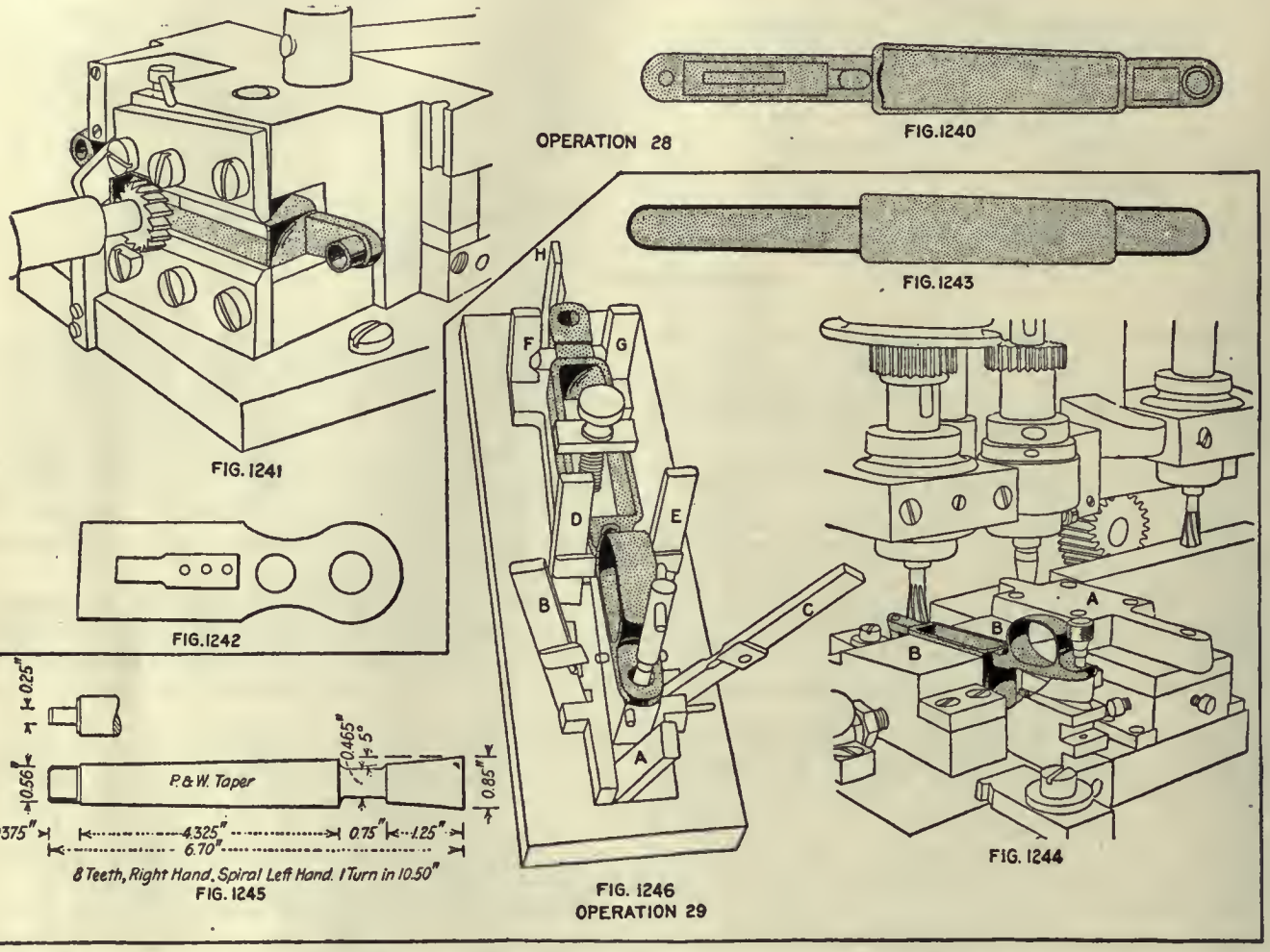

Sear, Trigger and Floor Plate

The sear and trigger are closely connected, the latter actuating the former, which in turn, relcases the cocking piece and allows the firing pin to be driven against the primer in the cartridgc. The trigger is another instance of ultra-refinement for, instead of being a truc curve, it is of a special, irregular shape which must be machined on a profiling machine.

OPERATION 30. MILLING EDGE OF TANGS

Transformation—Fig. 1247. Machine Used—Pratt & Whitney No. 2 Lincoln miller. Number of Machines per Operator Four. Work-Holding Devices—On pin; clamped with vise jaws, Fig. 1248. Tool-Holding Devices—Standard arbor. Cutting Tools—Two milling cutters, 2.75 in. diam., 0.5 in. wide, one plain, one with 0.15 R on one corner. Number of Cuts—One. Cut Data—60 r.p.m.; ⅝-in. feed. Coolant—Cutting oil, put on with brush. Average Life of Tool Between Grindings—2,500 pieces. Gages—None. Production—20 per hr.

OPERATION 31. MILLING LEFT SIDE OF TANGS

Transformation—See Fig. 1247. Machine Used—Same as operation 30, except reversed in fixture. Number of Machines per Operator—Four. Work-Holding Devices—On pin; clamped with vise jaws, same as Fig. 1248. Tool-Holding Devices—Standard arbor. Cutting Tools—Same as operation 30, except reversed in fixture. Number of Cuts—One. Cut Data—60 r.p.m.; ⅝-in. feed. Coolant—Cutting oil, put on with brush. Average Life of Tool Between Grindings—3,500 pieces. Gages—None. Production—20 per hr.

OPERATION 32. MILLING BEVEL ON OUTSIDE OF RIGHT WALL OF MAGAZINE

Transformation—Fig. 1249. Machine Used—Pratt & Whitney No. 2 Lincoln miller. Number of Operators per Machine—One. Work-Holding Devices—On pin; clamped, with vise jaws similar to Fig. 1248, but has block in magazine opening to prevent springing of sides. Tool-Holding Devices—Standard arbor. Cutting Tools—Milling cutters, Fig. 1250. Number of Cuts—One. Cut Data—60 r.p.m.; ⅝-in. feed. Coolant—Compound, ¼-in. stream. Average Life of Tool Between Grindings—3,500 pieces. Gages—Same as Fig. 1251, except for right hand. Production—25 per hr. Note—Block placed in hole.

OPERATION 33. MILLING BEVEL ON OUTSIDE OF LEFT WALL OF MAGAZINE

Transformation—See Fig. 1249. Machine Used—Pratt & Whitney No. 2 Lincoln miller. Number of Operators per Machine—One. Work-Holding Devices—Same as operation 32, only work is reversed in fixture (see Fig. 1248). Tool-Holding Devices—Standard arbor. Cutting Tools—Same as Fig. 1250. Number of Cuts—One. Cut Data—60 r.p.m.; ⅝-in. feed. Coolant—Compound, ¼-in. stream. Average Life of Tool Between Grindings—3,500 pieces. Gages—Fig. 1251; stand gages with fingers AA, which rest on block B; pin C locates the guard endwise. Production—20 per hr. Note—Block placed in hole to keep from closing in on clamping.

OPERATION 33½. COUNTERBORING GUARD-SCREW HOLES TO FINISH AND REAMING FLOOR-PLATE CATCH-PIN HOLE

Transformation—Same as Figs. 1177 and 1180. Machine Used—Speed lathe. Number of Operators per Machine—One. Work-Holding Devices—Held in hand against counterbore, practically a burring operation. Cutting Tools—Counterbore shown in Fig. 1252. Cut Data—450 r.p.m.; hand feed. Coolant—Cutting oil, put on with brush. Gages—None. Production—80 per hr.

OPERATION 30 & 31

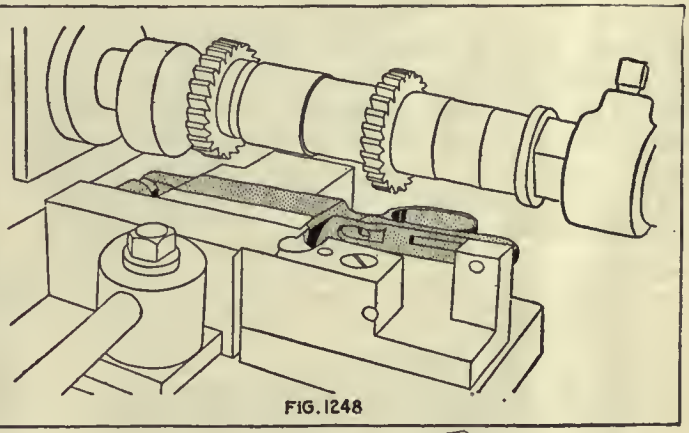

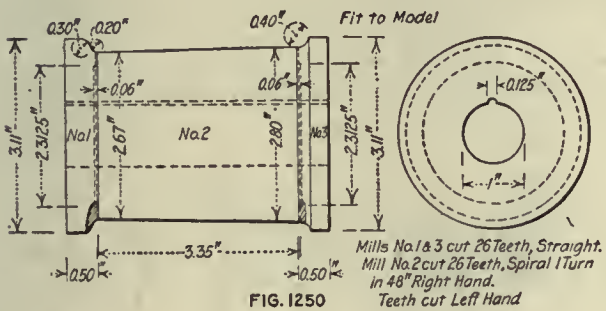

FIG. 1250

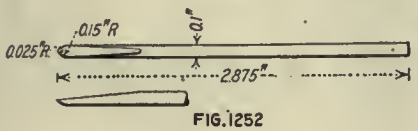

FIG. 1252

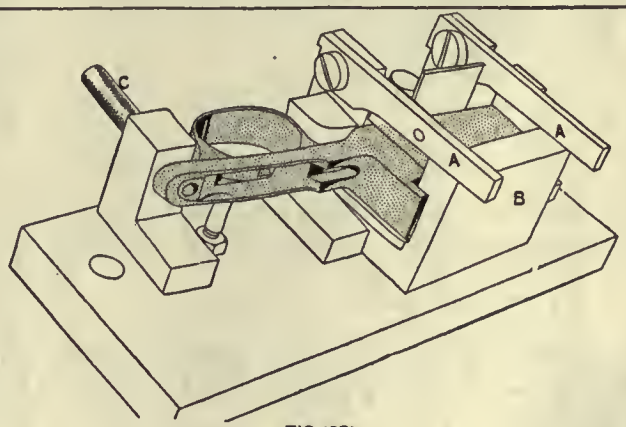

FIG. 1251

OPERATION 32

OPERATION 34. FILING, GENERAL

Number of Operators—One. Description of Operation—General filing and brushing up. Apparatus and Equipment Used—File. Production—10 per hr.

OPERATION 35. POLISHING

Number of Operators—One. Description of Operation—Polishing all outside surfaces. Apparatus and Equipment Used—Polishing jack and wheel. Production—18 per hr.

OPERATION 36. FILING AND CORNERING

Number of Operators—One. Description of Operation—Filing and cornering. Apparatus and Equipment Used—File. Production—50 per hr.

OPERATION 37. BLUING

Number of Operators—One. Description of Operation—Same as sleeve and other bluing operations.

*Copyright, 1917, McGraw-Hill Publishing Co., Inc.

†This installment should have preceded that published in the issue of Mar. 8, 1917.

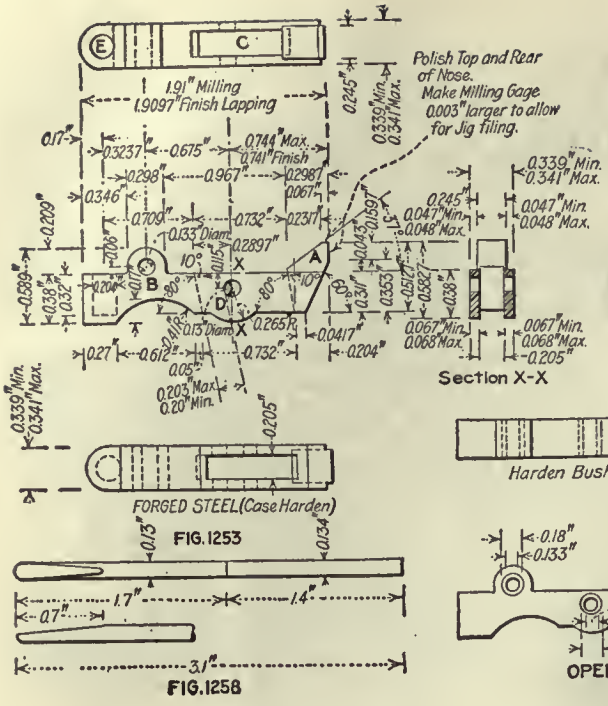

FIG. 1254
OPERATION A

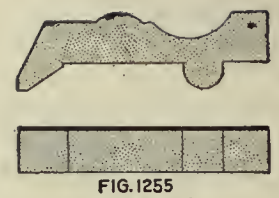
FIG. 1255
OPERATION I

FIG. 1256
OPERATION 2

FIG. 1257
OPERATION 3

Harden Bushings

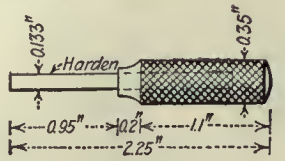

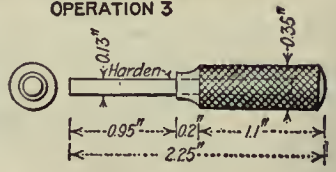

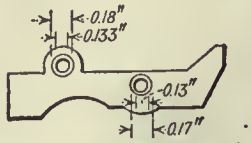

OPERATION 4

FIG. 1259

Longitudinal Section

The Sear

The sear, shown in detail in Fig. 1253, which in connection with the trigger releases the cocking piece and fires the rifle, is a drop forging made from Class D steel, 0.047 in. round. The principal parts are the sear nose *A*, the joint pin hole *B*, the trigger slot *C*, the trigger-pin hole *D* and the sear-spring seat *E*. The sear is finished by casehardening.

OPERATIONS ON THE SEAR

Operation	
A	Forging from bar
B	Annealing
B–1	Pickling
C	Trimming
1	Grinding right side
2	Grinding left side
3	Drilling trigger-pin and joint holes
4	Reaming trigger-pin and joint holes
AA	Reaming burrs from trigger and joint-pin holes
5	Milling top edge
BB	Removing burrs left by operation 9
6	Milling bottom edge
CC	Removing burrs left by operation 6
7	Straddle-milling point, or nose
DD	Removing burrs left by operation 7
8	Drilling for trigger and spring hole
9	Hand-milling front end
10 and 10½	Hand-milling trigger slot (two cuts)
11 and 11½	Shaving slot (two cuts)
FF	Removing burrs from trigger-pin holes
12	Hand-milling joint, undercuts
15	Countersinking joint-pin and spring holes
16	Shaving joint
17	Filing, general cornering
17½	Grinding nose
14	Casehardening
18	Finishing, honing nose

OPERATION A. FORGING FROM BAR

Transformation—Fig. 1254. Number of Operators—One. Description of Operation—Shaping from bar. Apparatus and Equipment Used—Billings & Spencer 400-lb. drop hammer; drop-forge dies. Production—125 per hr.

OPERATION B. ANNEALING

Number of Operators—One. Description of Operation—Placed in iron pots packed with powdered charcoal, heated to 850 deg. C. (1,562 deg. F.); left over night to cool. Apparatus and Equipment Used—Brown & Sharpe annealing furnaces; Rockwell oil-burning furnace and powdered charcoal.

OPERATION B-1. PICKLING

Number of Operators—One. Description of Operation—Placed in wire baskets, then in the pickling solution, consisting of 1 part sulphuric acid and 9 parts water, and left from

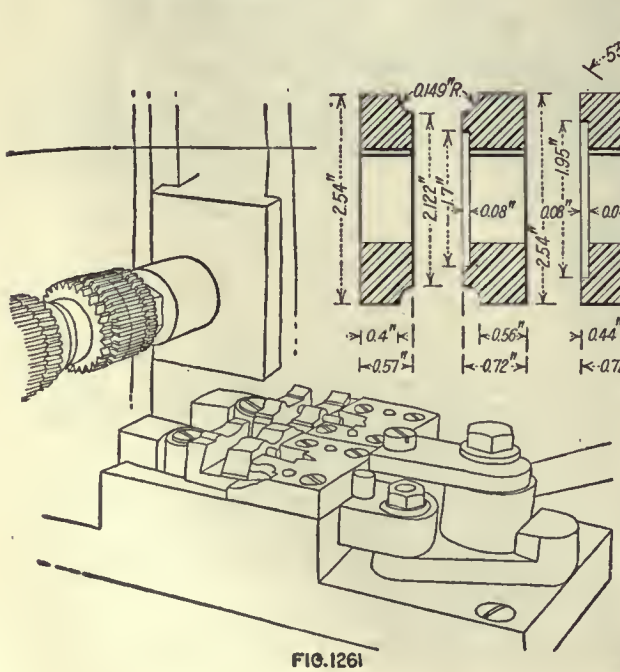
FIG. 1261

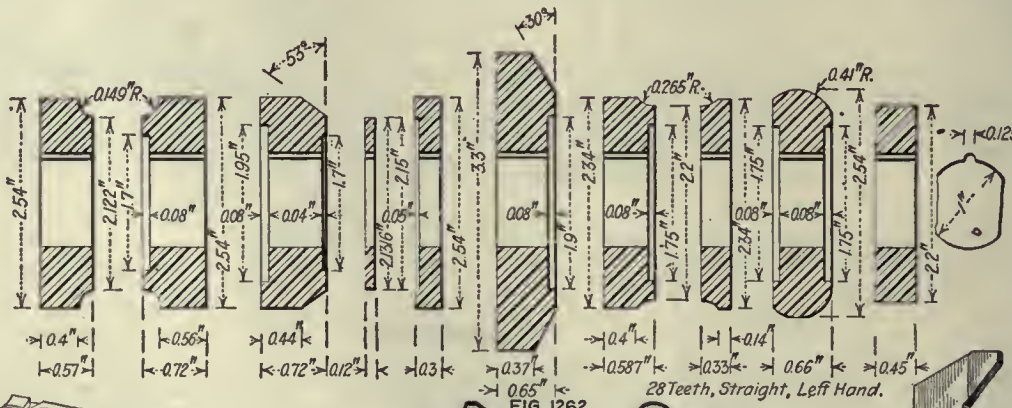

FIG. 1262

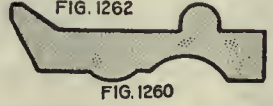
FIG. 1260

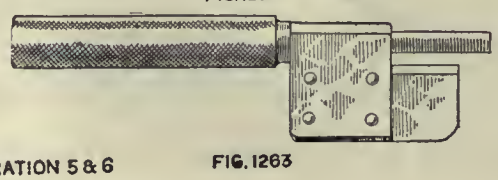
OPERATION 5 & 6

FIG. 1263

FIG. 1264

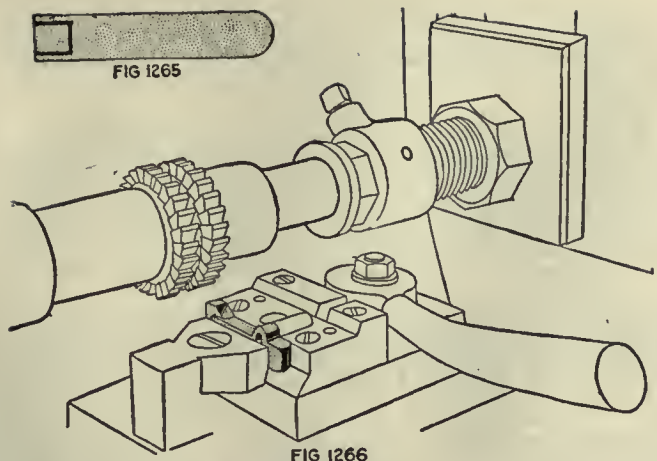
FIG 1265

FIG 1266
OPERATION 7

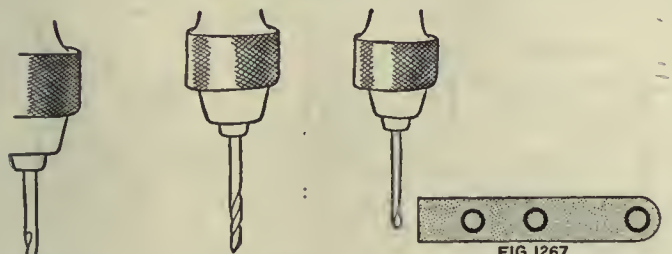
FIG. 1267

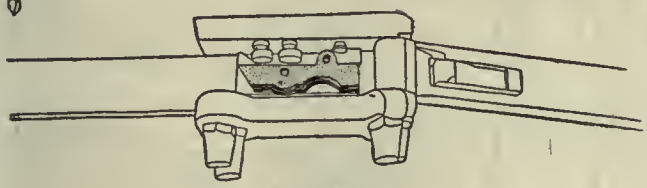
FIG. 1268
OPERATION 8

10 to 12 min. Apparatus and Equipment Used—Wire baskets, wooden pickling tanks and hoist.

OPERATION C. TRIMMING

Machine Used—Bliss press, 2-in. stroke. Number of Operators per Machine—One. Punches and Punch Holders—Square shank. Dies and Die Holders—In shoe by setscrew. Production—500 per hr.

OPERATION 1. GRINDING RIGHT SIDE

Transformation—Fig. 1253. Machine Used—Pratt & Whitney vertical grinder, 14-in. wheel, 30-in. magnetic chuck, same as extractor collar. Number of Operators per Machine—One. Work-Holding Devices—30-in. magnetic chuck with rods between. Cutting Tools—14-in. abrasive wheel. Cut Data—1,500 r.p.m. Coolant—Water. Gages—Snap for thickness. Production—425 per hr.

OPERATION 2. GRINDING LEFT SIDE

Transformation—Fig. 1256. Machine Used—Pratt & Whitney vertical grinder, 14-in. wheel, 30-in. magnetic chuck, same as extractor collar. Number of Operators per Machine—One. Work-Holding Devices—30-in. magnetic chuck. Cutting Tools—14-in. wheel. Cut Data—1,500 r.p.m. Gages—Similar to above. Production—425 per hr.

OPERATION 3. DRILLING TRIGGER-PIN AND JOINT HOLES

Transformation—Fig. 1257. Machine Used—Pratt & Whitney four-spindle 16-in. upright drilling machine. Number of Operators per Machine—One. Work-Holding Devices—Drill jig, with cover. Tool-Holding Devices—Drill chuck. Cutting Tools—Two drills. Number of Cuts—Two. Cut Data—600 r.p.m.; hand feed. Coolant—Cutting oil, $\frac{1}{8}$-in. stream. Average Life of Tool Between Grindings—250 pieces. Gages—None. Production—60 per hr.

OPERATION 4. REAMING TRIGGER-PIN AND JOINT HOLES

Transformation—See Fig. 1257. Machine Used—Either drilling machine or speed lathe of any make. Number of Operators per Machine—One. Work-Holding Devices—In jig or rest on speed lathe. Tool-Holding Devices—Reamer held in drill chuck. Cutting Tools—Reamer, Fig. 1258. Number of Cuts—One. Cut Data—450 r.p.m.; hand feed. Coolant—Cutting oil, put on with brush. Average Life of Tool Between Grindings—3,500 pieces. Gages—Fig. 1259. Production—350 per hr.

OPERATION AA. REAMING BURRS FROM TRIGGER AND JOINT-PIN HOLES

Number of Operators—One. Description of Operation—Removing burrs from trigger and joint-pin hole. Apparatus and Equipment Used—Hand reamer. Production—500 per hr.

OPERATIONS 5 AND 6. MILLING TOP AND BOTTOM EDGE

Transformation—Fig. 1260. Machine Used—Pratt & Whitney No. 2 Lincoln miller. Number of Operators per Machine—One. Work-Holding Devices—By vise jaws; located on pins in the trigger and joint holes, Fig. 1261. Tool-Holding Devices—Held on standard arbor. Cutting Tools—Gang of milling cutters, Fig. 1262. Number of Cuts—One. Cut Data—60 r.p.m.; $\frac{5}{8}$-in. feed. Coolant—Compound, two $\frac{1}{8}$-in. streams. Average Life of Tool Between Grindings—3,500 pieces. Gages—Fig. 1263, radius over joint hole; Fig. 1264, contour. Production—35 per hr. Note—Work-holding points, trigger-pin and joint holes; also gaging points.

OPERATION BB. REMOVING BURRS LEFT BY OPERATION 9

Number of Operators—One. Description of Operation—Removing burrs thrown up by several operations. Apparatus and Equipment Used—File. Production—Grouped with operations 5, 6, 7, CC and DD.

OPERATION CC. REMOVING BURRS LEFT BY OPERATION 6

Number of Operators—One. Description of Operation—Removing burrs thrown up by operation 6. Apparatus and Equipment Used—File. Gages—Grouped with operations 5, 6, 7, CC and DD.

OPERATION 7. STRADDLE-MILLING POINT OR NOSE

Transformation—Fig. 1265. Machine Used—Pratt & Whitney No. 2 Lincoln miller. Number of Machines per Operator—Three. Work-Holding Devices—On pins; clamped by vise

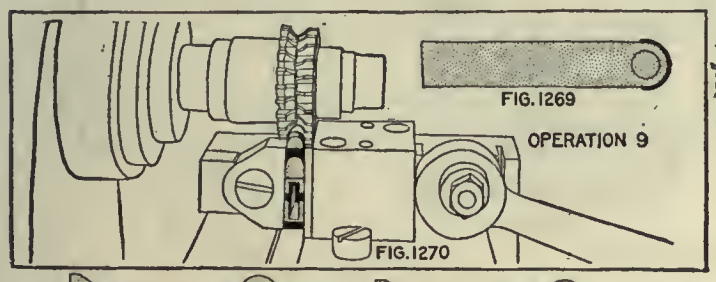
FIG. 1269

OPERATION 9

FIG. 1270

FIG. 1271

OPERATION 10 & 10½

FIG. 1272

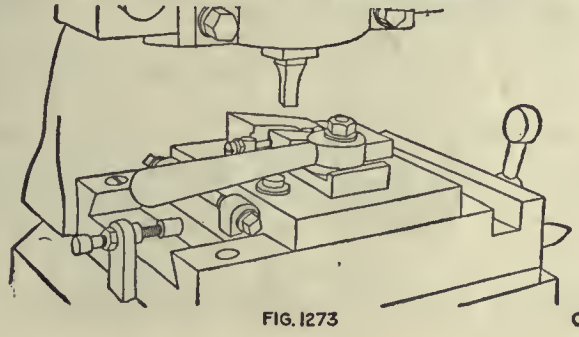
FIG. 1273

OPERATION 11 & 11½

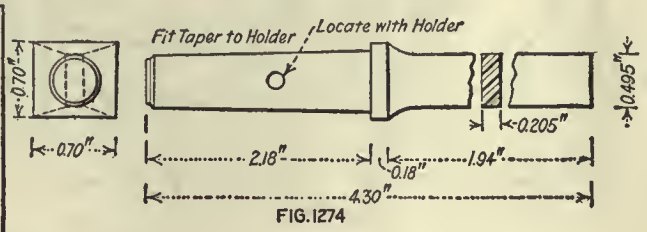

FIG. 1274

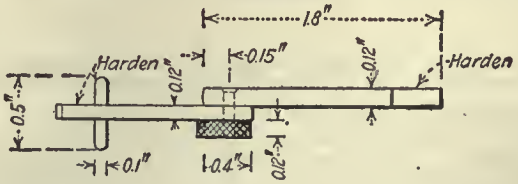

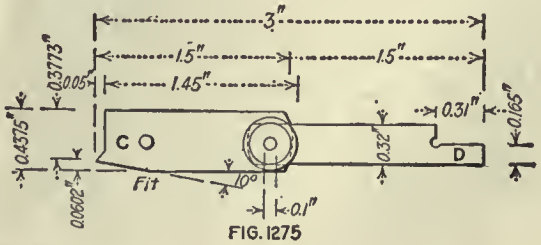

FIG. 1275

jaws, Fig. 1266. Tool-Holding Devices—Standard arbor. Cutting Tools—Two side-milling cutters, 2.5 in. diameter, 0.375 in. wide. Number of Cuts—One. Cut Data—60 r.p.m.; ⅝-in. feed. Coolant—Cutting oil, put on with brush. Average Life of Tool Between Grindings—3,500 pieces. Gages—Snap. Production—35 per hr.

OPERATION DD. REMOVING BURRS LEFT BY OPERATION 7

Number of Operators—One. Description of Operation—Removing burrs thrown up by operation 7. Apparatus and Equipment Used—File. Production—Grouped with operation 7.

OPERATION 8. DRILLING FOR TRIGGER AND SPRING HOLE

Transformation—Fig. 1267. Machine Used—Pratt & Whitney 16-in. three-spindle upright drilling machine. Number of Operators per Machine—One. Work-Holding Devices—Drill jig, Fig. 1268. Tool-Holding Devices—Drill chuck. Cutting Tools—Drill. Number of Cuts—Three. Cut Data—650 r.p.m.; hand feed. Coolant—Cutting oil, ⅛-in. stream. Average Life of Tool Between Grindings—150 pieces. Gages—Plug or pin. Production—40 per hr.

OPERATION 9. HAND-MILLING FRONT END

Transformation—Fig. 1269. Machine Used—Garvin No. 3 hand miller. Number of Operators per Machine—One. Work-Holding Devices—Located on pins; clamped with vise jaws, Fig. 1270. Tool-Holding Devices—Standard arbor. Cutting Tools—Interlocking milling cutters, 2.25 in. diameter, 0.68 in. wide; half circle groove in face, 0.17 in. radius. Number of Cuts—One. Cut Data—450 r.p.m.; hand feed. Coolant—Cutting oil, ⅛-in. stream. Average Life of Tool Between Grindings—1,500 pieces. Gages—Form. Production—300 per hr.

OPERATION FF. REMOVING BURRS FROM TRIGGER-PIN HOLES

Number of Operators—One. Description of Operation—Removing burrs from trigger hole. Apparatus and Equipment Used—Bench lathe and reamer. Production—Grouped with operation 12.

OPERATION 12. HAND-MILLING JOINT, UNDERCUTS

Transformation—Fig. 1276. Machine Used—Whitney No. 6 hand miller. Number of Operators per Machine—One. Work-Holding Devices—Located on pins; held by finger clamps, Fig. 1277. Tool-Holding Devices—Taper shank. Cutting Tools—Milling cutter, Fig. 1278. Number of Cuts—One. Cut Data—450 r.p.m.; hand feed. Coolant—Cutting oil, put on with brush. Average Life of Tool Between Grindings—1,000 pieces. Production—300 per hr.

OPERATION 15. COUNTERSINKING JOINT-PIN AND SPRING HOLES

Number of Operators—One. Description of Operation—Countersinking and removing sharp corners. Apparatus and Equipment Used—Speed lathe and countersink; this is 0.246 in. beam and has six left-hand flutes; a finish reamer, 0.133 in. diameter with half-round point, finishes hole. Production—450 per hr.

OPERATION 16. SHAVING JOINT

Transformation—Fig. 1279. Number of Operators—One. Description of Operation—Shaving radius on joint; this is done by clamping sear in the handle A, Fig. 1280, as shown;

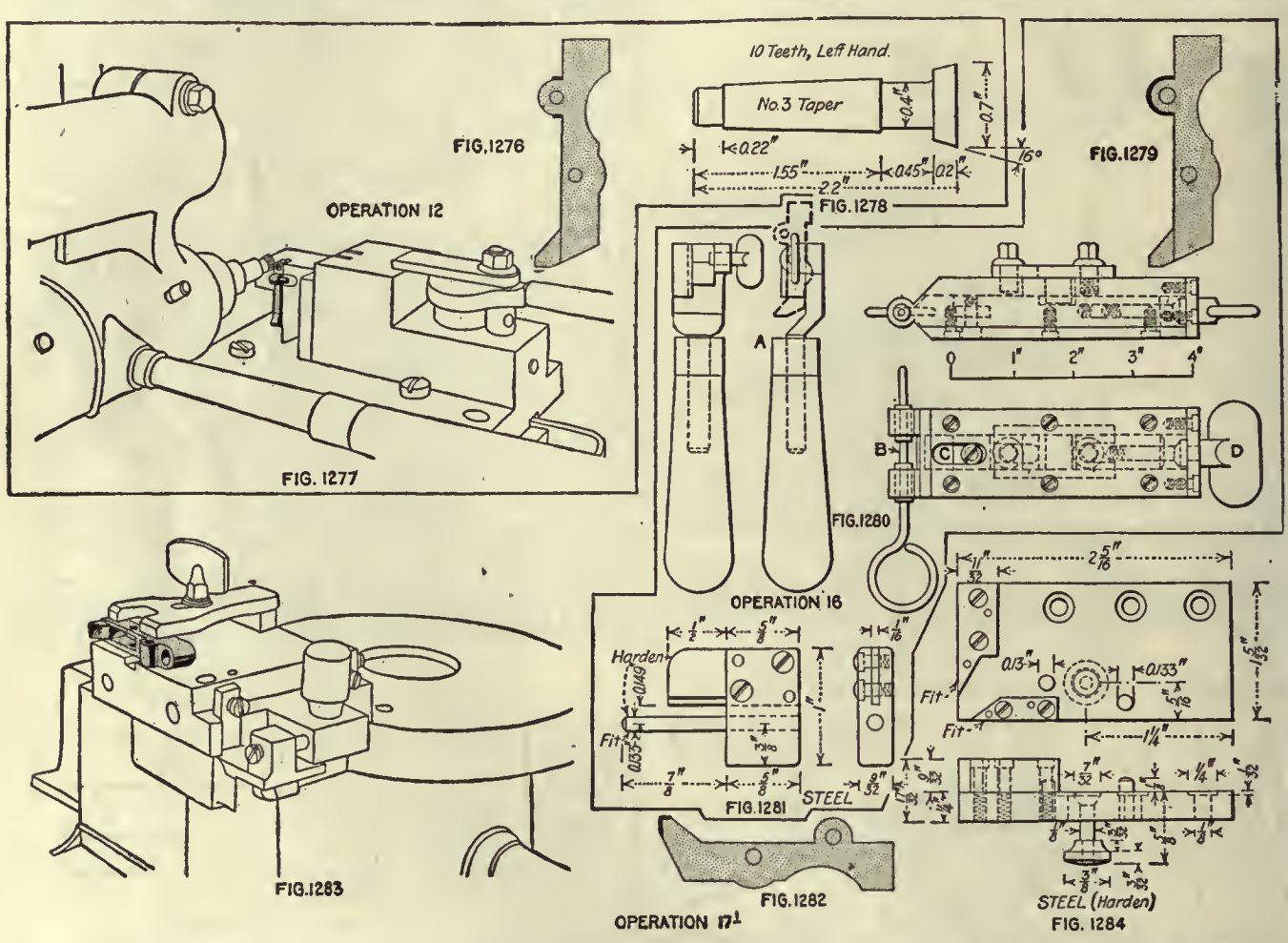

the shaving tool at the right is clamped in the vise; the sear joint is placed between the ears shown, and the pin B run through the joint hole; then the sear is rotated on the pin by the handle A, while the cutter C is fed against the sear by the thumb-screw D, shaving the radius. Apparatus and Equipment Used—Vise shaving fixture; hand holder for rotating sear. Gages—Fig. 1281, radius. Production—125 per hr.

OPERATIONS 10 AND 10½. HAND-MILLING TRIGGER SLOT (TWO CUTS)

Transformation—Fig. 1271. Machine Used—Garvin No. 3 hand miller. Number of Operators per Machine—One. Work-Holding Devices—Located by pins; clamped with vise jaws. Tool-Holding Devices—Taper shank. Cutting Tools—Milling cutter. Number of Cuts—One. Cut Data—450 r.p.m.; hand feed. Coolant—Compound, ⅛-in. stream. Average Life of Tool Between Grindings—500 pieces. Gages—None. Production—80 per hr.

OPERATIONS 11 AND 11½. SHAVING SLOT (TWO CUTS)

Transformation—Fig. 1272. Machine Used—Perkins press, 1½-in. stroke. Number of Operators per Machine—One. Punches and Punch Holders—Square shank; work held in vise jaws, Fig. 1273; located by pin; work swung to two positions; punch shown in Fig. 1274. Stripping Mechanism—None. Average Life of Punches—400 pieces. Lubricant—Cutting oil, put on with brush. Gages—Fig. 1275; thickness of wall; length of slot at C and width at D. Production—80 per hr. Note—Fixture moves crosswise by handle at right of machine.

OPERATION 17. FILING, GENERAL CORNERING

Number of Operators—One. Description of Operation—Filing and cornering. Apparatus and Equipment Used—File. Production—125 per hr.

OPERATION 17½. GRINDING NOSE

Transformation—Fig. 1282. Machine Used—Machine built at Hill shop. Number of Operators per Machine—One. Work-Holding Devices—In an indexing fixture, Fig. 1283. Tool-Holding Devices—On spindle. Cutting Tools—8-, 6-, 2½- and 1¼-in., grain 46, grade G, tested 4,300, ½-in. rim, ½-in. back, Norton alundum wheels. Number of Cuts—Two. Cut Data—1,500 r.p.m.; hand feed. Coolant—None. Gages—Form, Fig. 1284. Production—125 per hr.

OPERATION 18. FINISHING, HONING NOSE

Number of Operators—One. Description of Operation—Honing top of nose. Apparatus and Equipment Used—Oilstone. Production—350 per hr.

OPERATION 14. CASEHARDENING

Number of Operators—One. Description of Operation—Packed in ¾ bone, ¼ leather; heated to 750 deg. C. (1,382 deg. F.) for 2½ hr.; quenched in oil. Apparatus and Equipment Used—Same equipment as for all other casehardening.

The Trigger

The trigger shown in detail in Fig. 1285, which is hinged in the sear and pulls the sear down so as to release the cocking piece, is now made of a steel punching instead of being drop forged as formerly. It is made from Class D steel, is finished by milling and is casehardened in the usual manner. The main parts of the trigger are the finger piece *A*, which is knurled to prevent the slipping of the fingers; the bearing point *B*, which comes in contact with the under side of the receiver; the trigger-pin hole *C*; the heel *D* and the stop *E*.

OPERATIONS ON THE TRIGGER

Operation	
A	Blanking
B	Pressing
B-1	Pickling
1	Grinding to finish thickness
3	Drilling pin hole
5 and 6	Milling edges (combination fixture)
AA	Removing burrs left by operation 5
BB	Removing burrs left by operation 6
6½	Milling upper surface
7	Profiling finger piece
CC	Removing burrs left by operation 7
7½	Checking finger piece
13	Reaming and counterboring trigger-pin hole
8	Polishing side, edges and finger piece
9	Filing and general cornering
10	Casehardening
8½	Polishing top
11	Assembling with sear and trigger pin

OPERATION A. BLANKING

Transformation—Fig. 1286. Machine Used—Perkins back-geared press. Number of Operators per Machine—One. Punches and Punch Holders—Square shank. Dies and Die Holders—Die held in shoe by setscrew. Stripping Mechanism—Stripping plate. Lubricant—Stock is oiled with cutting oil. Production—550 per hr. Note—Size of stock, 0.235x2¾ in., 132 lb. to 1,000 pieces.

OPERATION B. PRESSING

Machine Used—Bliss back-geared press. Number of Operators per Machine—One. Punches and Punch Holders—Flat plate, round shank. Dies and Die Holders—Flat plate. Stripping Mechanism—None. Production—700 per hr. Note—Simply flattens the punchings for future operations.

OPERATION B-1. PICKLING

Number of Operators—One. Description of Operation—Placed in wire baskets and then in the pickling solution, which consists of 1 part sulphuric acid and 9 parts water; left in this solution 10 to 12 min. Apparatus and Equipment Used—Wire baskets, wooden pickling tanks, hoist.

OPERATION 1. GRINDING TO FINISH THICKNESS

Transformation—Fig. 1287. Machine Used—Pratt & Whitney vertical grinder. Number of Operators per Machine—One. Work-Holding Devices—30-in. magnetic chuck, located between strips of steel. Tool-Holding Devices—Vertical spindle. Cutting Tools—14-in. wheel, same as sear. Cut Data—1,500 r.p.m.; 15-in. feed. Coolant—Water. Gages—Thickness. Production—350 per hr.

OPERATION 3. DRILLING PIN HOLE

Transformation—Fig. 1288. Machine Used—National automatic 16-spindle upright drilling machine. Number of Operators per Machine—One. Work-Holding Devices—Held in fixture in lots of eight; triggers are held in and positioned by the plate, Fig. 1289; this is enough thinner than the trigger so that the bar clamps them and also guides the

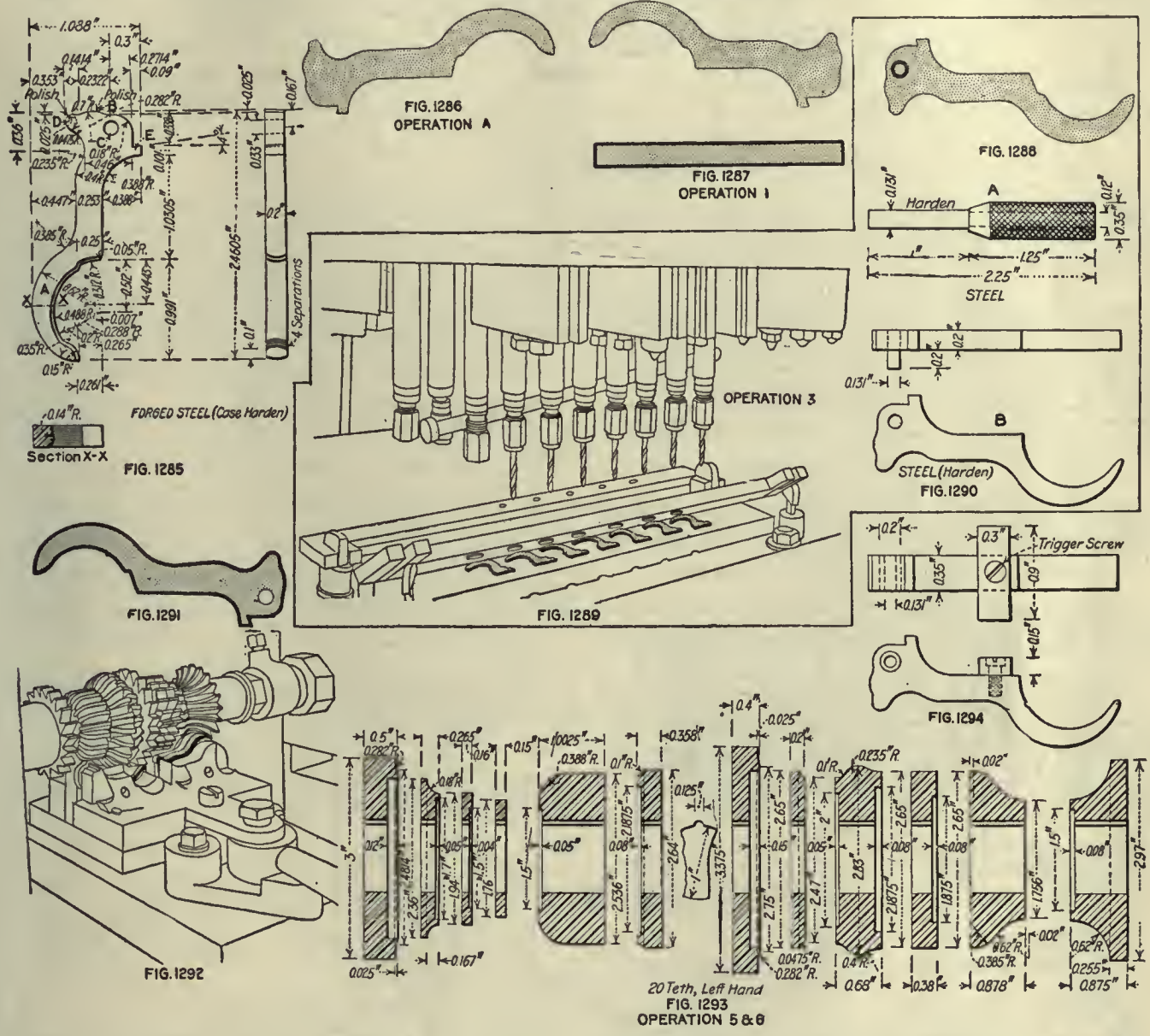

FIG. 1295

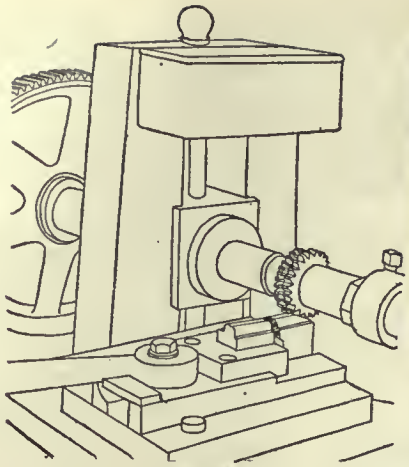

FIG. 1296

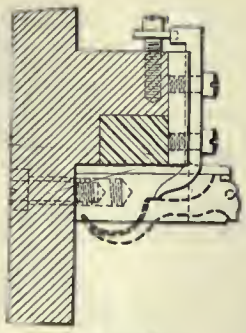

FIG. 1297

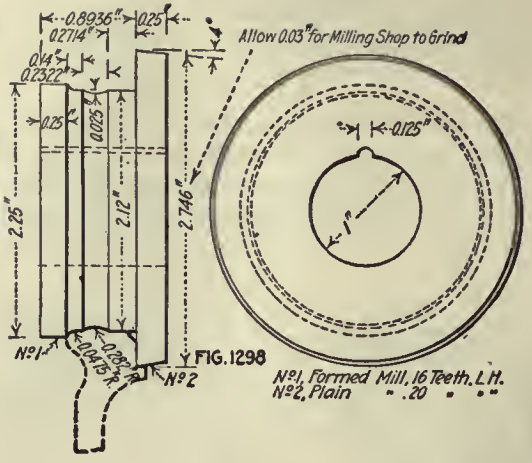

FIG. 1298

OPERATION 6½

eight drills. Tool-Holding Devices—Drill chuck. Cutting Tools—Twist drills. Number of Cuts—One. Cut Data—900 r.p.m.; $\frac{1}{16}$-in. feed. Coolant—Cutting oil, $\frac{1}{16}$-in. stream. Average Life of Tool Between Grindings—200 pieces. Gages—Fig. 1290; A, plug; B, form. Production—125 per hr.

OPERATIONS 5 AND 6. MILLING EDGES

Transformation—Fig. 1291. Machine Used—Pratt &Whitney No. 2 Lincoln milier. Number of Machines per Operator—Two. Work-Holding Devices—On pin and stop; clamped by vise jaws, Fig. 1292. Tool-Holding Devices—Standard arbor. Cutting Tools—Gang milling cutter, Fig. 1293; the cutters for the finger pull are shown. Number of Cuts—One. Cut Data—60 r.p.m.; §-in. feed. Coolant—Cutting oil, put on with brush. Average Life of Tool Between Grindings—3,500 pieces. Gages—Fig. 1294; the pin locates the trigger on form gage; the stop positions it and enables the outline to be compared. Production—35 per hr.

OPERATION AA. REMOVING BURRS LEFT BY OPERATION 5

Number of Operators—One. Description of Operation—Removing burrs thrown up by operation 5. Apparatus and Equipment Used—File. Production—Grouped with operations 5 and 6. Note—This is rough-burring.

OPERATION BB. REMOVING BURRS LEFT BY OPERATION 6

Number of Operators—One. Description of Operation—Removing burrs thrown up by operation 6. Apparatus and Equipment Used—File. Production—Grouped with operations 5 and 6. Note—This is finish-burring.

OPERATION 6½. MILLING UPPER SURFACE

Transformation—Fig. 1295. Machine Used—Pratt & Whitney No. 2 Lincoln miller. Number of Operators per Machine—One. Work-Holding Devices—Trigger located by pin; clamped by cam, Fig. 1296; details in Fig. 1297. Tool-Holding Devices—Standard arbor. Cutting Tools—Milling cutter, Fig. 1298. Number of Cuts—One. Cut Data—60 r.p.m.; §-in. feed. Coolant—Cutting oil, put on with brush. Average Life of Tool Between Grindings—3,500 pieces. Gages—See Fig. 1294. Production—30 per hr.

OPERATION 7. PROFILING FINGER PIECE

Transformation—Fig. 1299. Machine Used—Pratt & Whitney No. 1 profiler, Fig. 1300. Number of Operators per Machine—One. Work-Holding Devices—Work held on pin A, against stop B by clamp C, operated by cam D. Tool-Holding Devices—Taper shank. Cutting Tools—Formed profile cutter to round edge. Number of Cuts—Two. Cut Data—1,200 r.p.m.; hand feed. Coolant—Compound, two ¼-in. streams. Average Life of Tool Between Grindings—350 pieces. Gages—Fig. 1301; the trigger pivots on pin X and stops against pin Y to show correct form; form of finger pull. Production—70 per hr.

OPERATION CC. REMOVING BURRS LEFT BY OPERATION 7

Number of Operators—One. Description of Operation—Removing burrs thrown up by operation 7. Apparatus and Equipment Used—File. Production—Grouped with operation 7½.

OPERATION 7½. CHECKING FINGER PIECE

Transformation—Fig. 1302. Machine Used—Whitney hand miller. Number of Operators per Machine—One. Work-Holding Devices—Located on pin; clamped by vise jaws, Fig. 1303; the work projects as at A; the cutter B is guided in its proper path by form C bolted to the table, which controls movement of the guide roller D, as in former operations. Tool-Holding Devices—Special taper shank; arbor with roller. Cutting Tools—Milling cutter for corrugating. Number of Cuts—One. Cut Data—600 r.p.m.; hand feed. Coolant—Cutting oil, put on with brush. Average Life of Tool Between Grindings—3,500 pieces. Gages—None. Production—475 per hr.

OPERATION 13. REAMING AND COUNTERBORING TRIGGER-PIN HOLE

Number of Operators—One. Description of Operation—Reaming pin hole to finish. Apparatus and Equipment Used—Reamer, 0.133 in. diameter, with half-round point; and bench lathe. Gages—Plug. Production—500 per hr.

OPERATION 8. POLISHING SIDE, EDGES AND FINGER PIECE

Number of Operators—One. Description of Operation—Polishing sides and finger piece. Apparatus and Equipment Used—Polishing jack and wheel. Production—125 per hr.

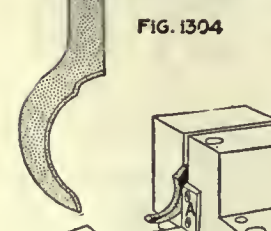

FIG. 1304

FIG. 1302

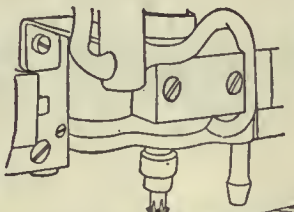

FIG. 1299

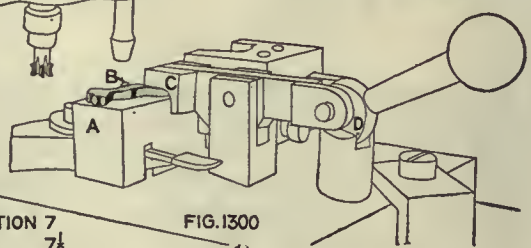

FIG. 1300

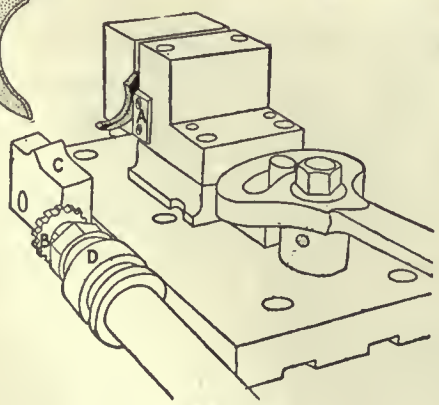

FIG. 1303

NOTE: FIG. 1299, 1300 & 1301 OPERATION 7
FIG. 1302 & 1303 " 7½
FIG. 1304 " 11

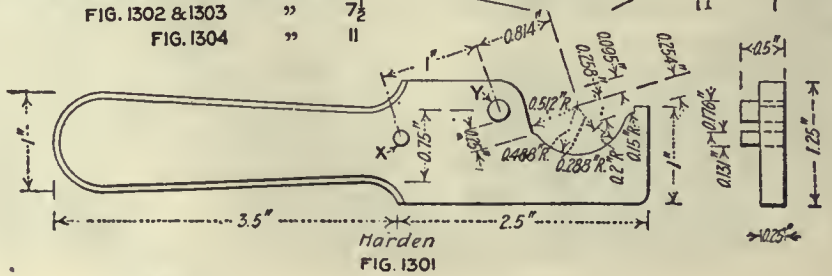

FIG. 1301

OPERATION 9. FILING AND GENERAL CORNERING

Number of Operators—One. Description of Operation—General filing and cornering. Apparatus and Equipment Used—File. Production—125 per hr.

OPERATION 10. CASEHARDENING

Number of Operators—One. Description of Operation—Same as performed on the sear.

OPERATION 8½. POLISHING TOP

Number of Operators—One. Description of Operation—Polishing top surface of trigger after hardening. Apparatus and Equipment Used—Wheel and polishing jack. Production—600 pieces per hr.

OPERATION 11. ASSEMBLING WITH SEAR AND TRIGGER PIN

Transformation—Fig. 1304. Number of Operators—One. Description of Operation—Assembling sear and trigger. Apparatus and Equipment Used—Hammer and block on bench. Production—350 per hr.

securely in place at the bottom of the magazine. The lug *B* is slotted to receive the floor-plate catch and has at its front end a tenon that fits into a slot in the magazine. The cavity *C*, through which the floor-plate catch is released by the end of a bullet, the magazine-spring recess *D* and the magazine-spring seat *E* complete the major operations on this piece.

OPERATIONS ON FLOOR PLATE

Operation	
A	Forging from bar
B	Annealing
B-1	Pickling
C	Trimming
D	Cold dropping
1	Milling edge and bottom and both ends

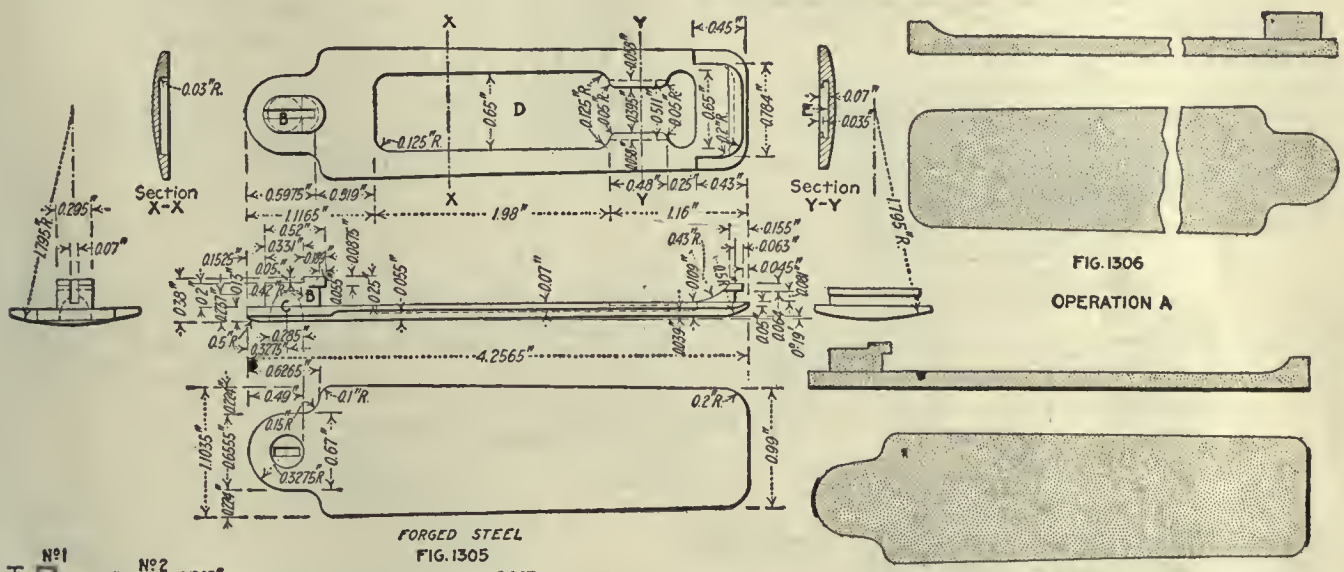

FIG. 1305

FIG. 1306

OPERATION A

FIG. 1307

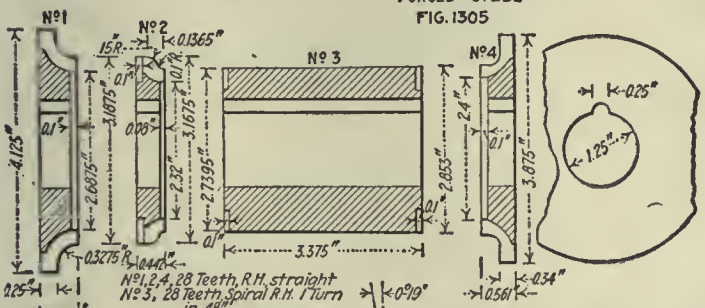

FIG. 1309

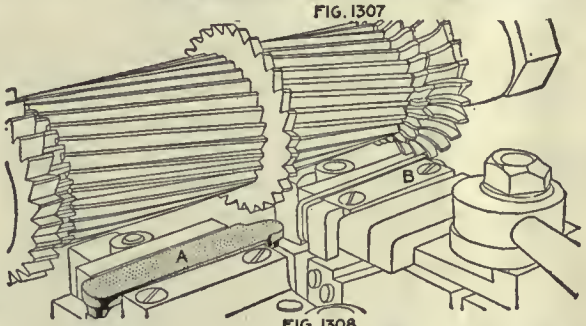

FIG. 1308

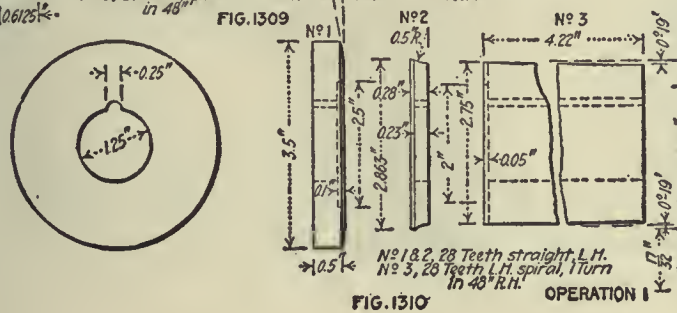

FIG. 1310

OPERATION 1

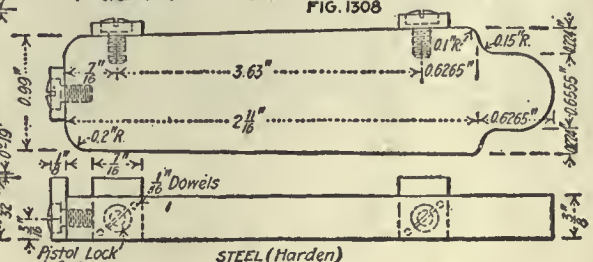

FIG. 1311

Magazine Mechanism

The magazine mechanism, shown in Fig. 2, p. 636, Vol. 45, as a unit, consists of the floor plate, floor-plate catch, pin and spindle. There are also the follower, magazine spring, cutoff and cutoff spindle, shown in detail in their regular order. Then there are the minor details, such as the cutoff screw, spring and plunger, the dimensions of which are shown.

The floor plate, Fig. 1305, has a tenon that fits into a groove at the front end of the magazine and, with the assistance of the floor-plate catch, holds the floor plate

4	Milling top crosswise
4½	Burring operation
6	Drilling and reaming disassembling hole
7	Hand-milling straddle cut lengthwise on lug
7½	Straightening
8	Profiling lug and tenon
8½	Burring operation 8
9	Profiling undercuts on lug and tenon
9½	Filing lugs to match profiling and milling cuts
10	Hand-milling for front end of magazine-spring recess
10½	Hand-milling for rear end of magazine-spring recess
11	Profiling magazine-spring recess to form and depth
11½	Burring operation 11
12	Profiling undercuts for magazine-spring seat
13	Milling bottom lengthwise
13½	Burring operation 13
14	Hand-milling floor-plate catch slot in rear lug
14½	Finish straightening
20	Filing, general
21	Polishing
22	Filing, cornering
23	Bluing

OPERATION A. FORGING FROM BAR

Transformation—Fig. 1306. Number of Operators—One. Description of Operation—Shaping from bar. Apparatus and Equipment Used—Billings & Spencer 1,000-lb. drop hammer. Production—120 per hr.

OPERATION B. ANNEALING

Number of Operators—One. Description of Operation—Placed in iron pots packed with powdered charcoal; heated to 850 deg. C. (1,562 deg. F.); left over night to cool. Apparatus and Equipment Used—Brown & Sharpe annealing furnaces; oil burner and powdered charcoal.

OPERATION B-1. PICKLING

Number of Operators—One. Description of Operation—Placed in wire baskets and then put in the pickling solution,

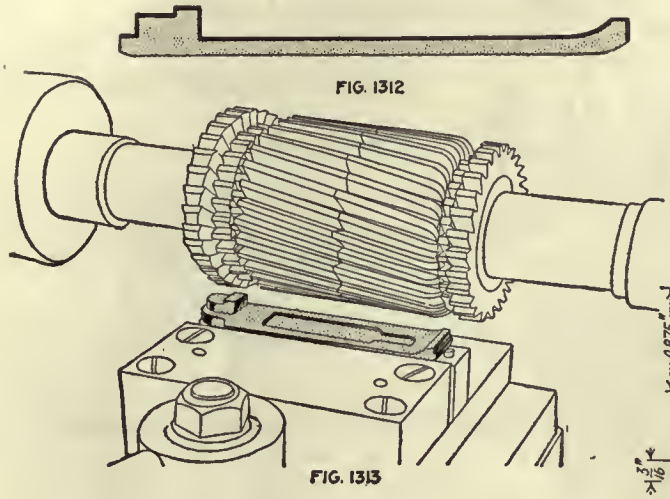

FIG. 1312

FIG. 1313

which consists of 1 part sulphuric acid and 9 parts water; left in this from 10 to 12 min. Apparatus and Equipment Used—Wire baskets, wooden pickling tanks, hand hoist.

OPERATION C. TRIMMING

Machine Used—Bliss back-geared press, 2-in. stroke. Number of Operators per Machine—One. Punches and Punch Holders—Square shank. Dies and Die Holders—Held in shoe by setscrew. Average Life of Punches and Dies—15,000 pieces. Production—500 per hr.

OPERATION D. COLD DROPPING

Number of Operators—One. Description of Operation—Straightening after trimming. Apparatus and Equipment Used—400-lb. Billings & Spencer drop hammer. Production—500 per hr.

OPERATION 1. MILLING EDGE AND BOTTOM AND BOTH ENDS

Transformation—Fig. 1307. Machine Used—Pratt & Whitney No. 2 Lincoln miller. Number of Operators per Machine—One. Work-Holding Devices—Held in vise jaws two at a time; one is shown in place at A in Fig. 1308; the other jaws B are empty; these mill two plates on the edge. Tool-Holding Devices—Standard arbor. Cutting Tools—Milling cutters, Fig. 1309, for the edges; Fig. 1310, for the bottom. Number of Cuts—One. Cut Data—60 r.p.m.; ⅝-in. feed. Coolant—Cutting oil, put on with brush. Average Life of Tool Between Grindings—5,000 pieces. Gages—Fig. 1311; contour of outside by form gage with side and end stops; contour of back. Production—20 per hr. Note—Mill bottom, one plate; mill edge, two plates.

OPERATION 4. MILLING TOP CROSSWISE

Transformation—Fig. 1312. Machine Used—Pratt & Whitney No. 2 Lincoln miller. Number of Operators per Machine—One. Work-Holding Devices—Vise jaws; work pushed to stop, Fig. 1313. Tool-Holding Devices—Standard arbor. Cutting Tools—Milling cutters, Fig. 1314. Number of Cuts—One. Cut Data—60 r.p.m.; ⅝-in. feed. Coolant—Cutting oil, put on with brush. Average Life of Tool Between Grindings—5,000 pieces. Gages—Fig. 1315, contour of top, also height of lug. Production—20 per hr.

OPERATION 4½. BURRING OPERATION 4

Number of Operators—One. Description of Operation—Removing burrs thrown up by operation 4. Apparatus and Equipment Used—File. Production—400 per hr.

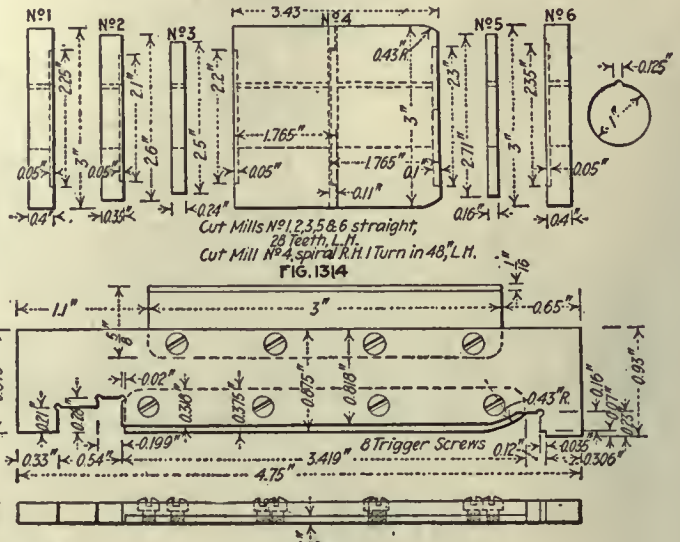

FIG. 1314

OPERATION 4

STEEL (Harden)

FIG. 1315

Floor-Plate Catch, Magazine Spring, Cutoff and Follower

As has been seen, this is a piece which requires many operations, some of them being rather fussy and inconvenient owing to the piece being very thin and difficult to hold. When we realize that it is a drop forging, that is machined all over and contains some very delicate undercuts which require small, thin and easily broken milling cutters, we are apt to wonder if there is not some simpler method by which it can be made.

Experts in sheet metal work will find it interesting to plan other ways and means of making these pieces.

One of the interesting features of the design of the floor plate is the way in which the catch which holds it in place is released by simply inserting the ball end of a cartridge in the recess shown in Figs. 1316 and 1317. The leaf on the catch comes through the opening milled in operation 14, Fig. 1338, and is easily operated by the cartridge point.

The undercutting for the end of the magazine spring in Figs. 1333 and 1334 is of special interest as the profiling cutter is but 0.44 in. in diameter and only 0.035 in. thick. The method of gaging this is to have two buttons or disks on the end of a plug. The one for measuring the depth of the slot also acts as the minimum width gage while the width gage gives the minimum for the depth. This tells the inspector which dimension is incorrect.

*Copyright, 1917, Hill Publishing Co.

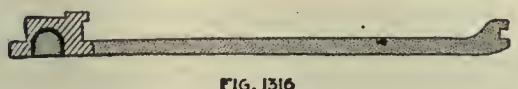
FIG. 1316

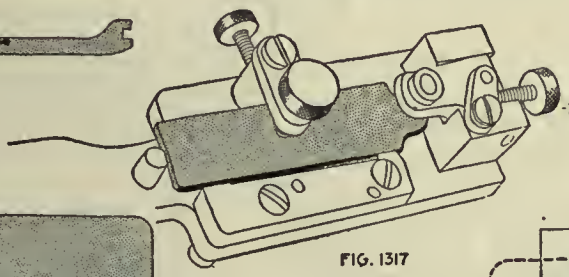
FIG. 1317

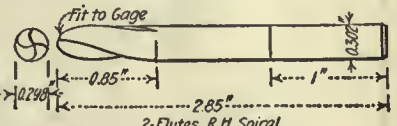

FIG. 1318

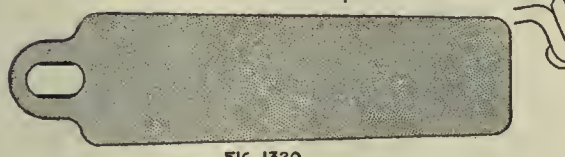
FIG. 1320

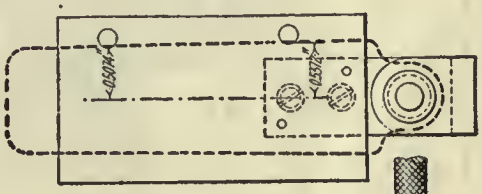

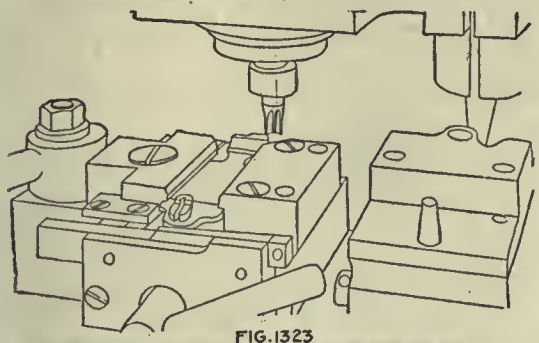
FIG. 1323

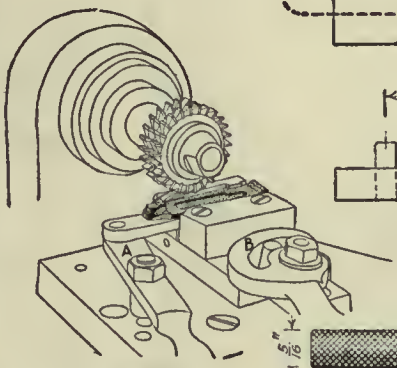

FIG. 1321

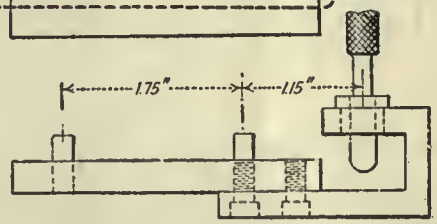

FIG. 1319

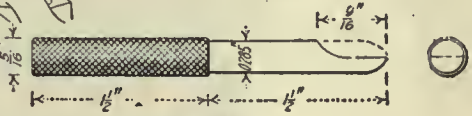

FIG. 1318

FIG. 1322

FIG. 1316, 1317, 1318, 1319 OP. 6
FIG. 1320, 1321, OP. 7
FIG. 1322, 1323, 1324, 1325, OP. 8

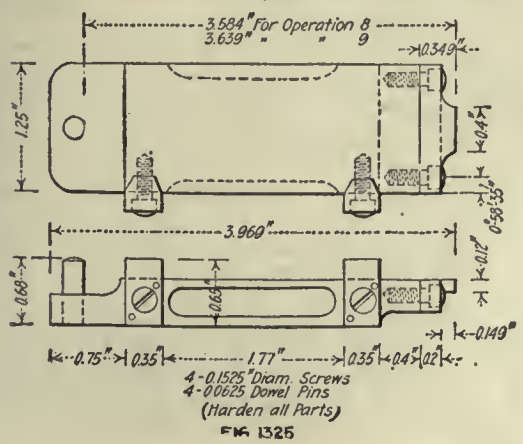

FIG. 1325

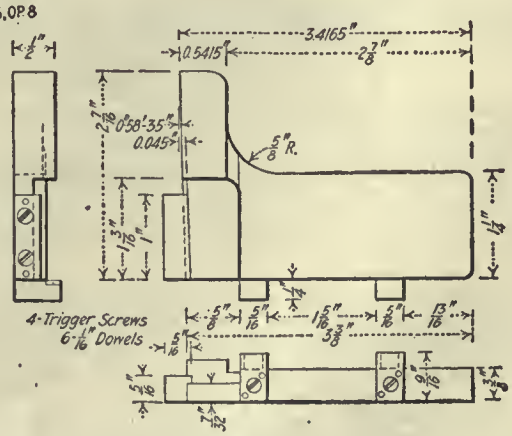

FIG. 1324

OPERATION 6. DRILLING AND REAMING DISASSEMBLING HOLE

Transformation—Fig. 1316. Machine Used—Dwight-Slate 16-in. three-spindle upright drilling machine. Number of Operators per Machine—One. Work-Holding Devices—Drill jig, Fig. 1317. Tool-Holding Devices—Drill chuck. Cutting Tools—Drill, Fig. 1318; shoulder drill and forming drill. Number of Cuts—Two. Cut Data—750 r.p.m.; hand feed. Coolant—Cutting oil, $\frac{1}{16}$-in. stream. Average Life of Tool Between Grindings—Two roughers and one finisher, good for 250 pieces. Gages—Form and location, Fig. 1319. Production—75 per hr.

OPERATION 7. HAND-MILLING STRADDLE CUT LENGTHWISE ON LUG

Transformation—Fig. 1319. Machine Used—Garvin No. 3 hand miller. Number of Operators per Machine—One. Work-Holding Devices—Held by vise jaws; pushed up against top by lever A; clamped by cam B, Fig. 1321. Tool-Holding Devices—Standard arbor. Cutting Tools—Pair of straddle mills, 2.75 in. diam., 0.3 in. thick. Number of Cuts—One. Cut Data—300 r.p.m.; hand feed. Coolant—Compound, ¼-in stream. Average Life of Tool Between Grindings—5,000 pieces. Gages—Snap for width. Production—125 per hr.

OPERATION 7½. STRAIGHTENING

Number of Operators—One. Description of Operation—Straightening. Apparatus and Equipment Used—Hammer, lead block and straight-edge. Production—175 per hr.

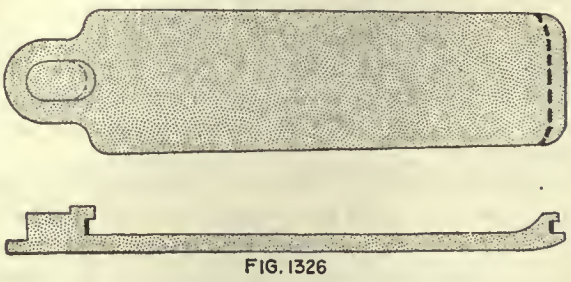

FIG. 1326

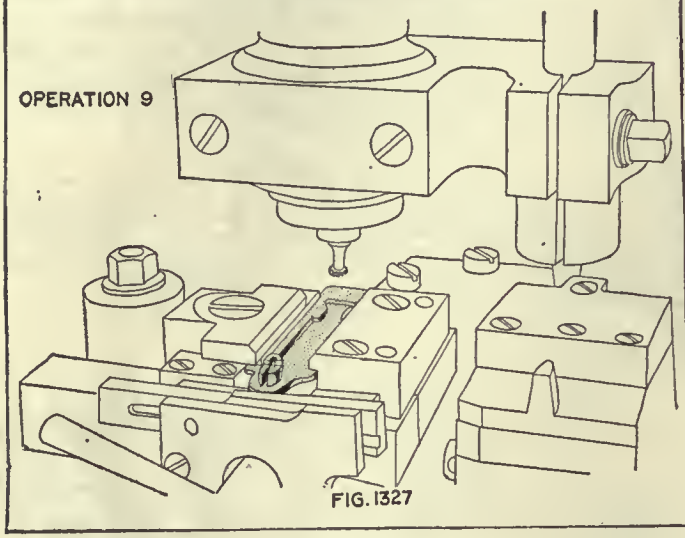

OPERATION 9

FIG. 1327

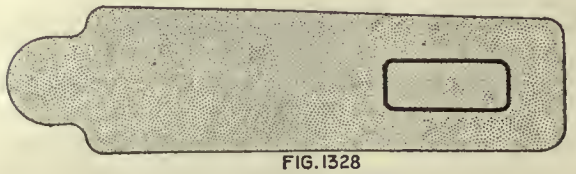

FIG. 1328
OPERATION 10

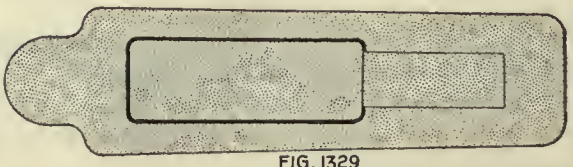

FIG. 1329
OPERATION 10½

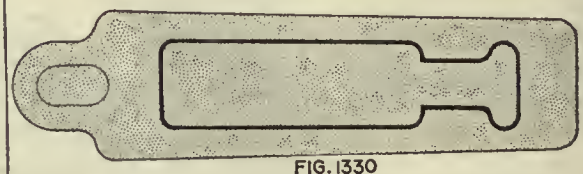

FIG. 1330

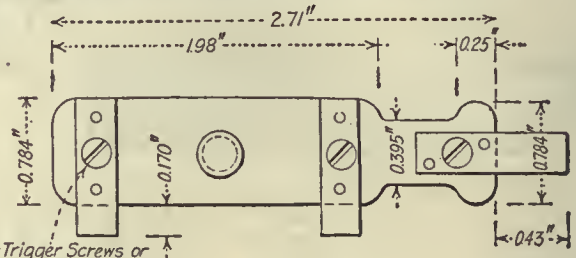

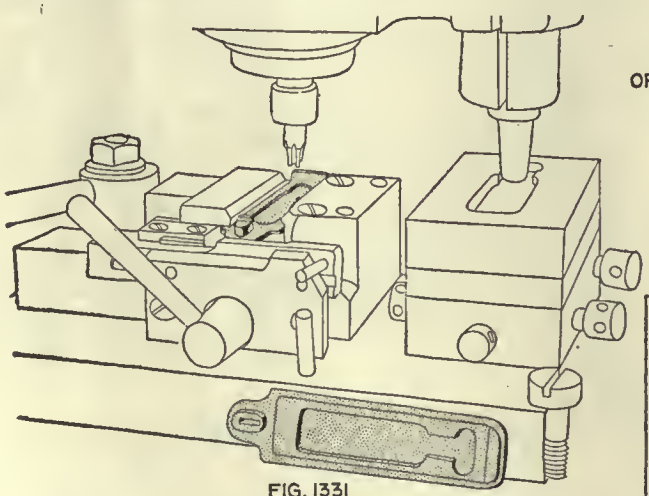

FIG. 1331

OPERATION 11

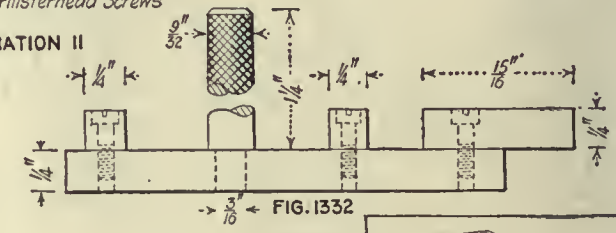

FIG. 1332

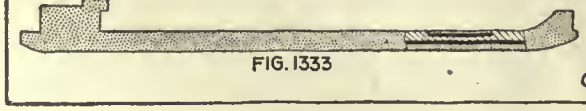

FIG. 1333

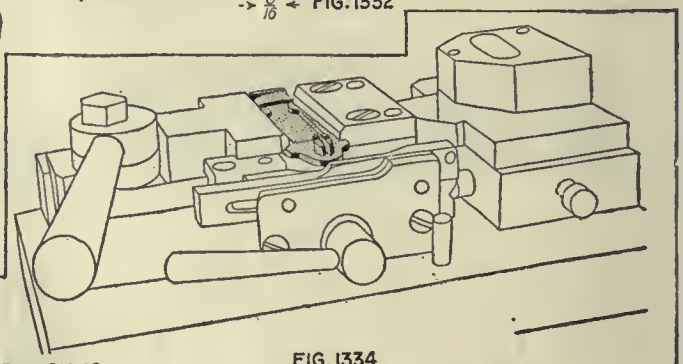

OPERATION 12

FIG. 1334

OPERATION 8. PROFILING LUG AND TENON

Transformation—Fig. 1322. Machine Used—Pratt & Whitney No. 2 profiler. Number of Operators per Machine—One. Work-Holding Devices—Pushed up to stop; clamped with vise jaws, Fig. 1323. Tool-Holding Devices—Taper shank. Cutting Tools—Profiling cutter, 0.40 in. diam., 6 right-hand teeth, 0.32 in. long. Number of Cuts—Two. Cut Data—1,200 r.p.m.; hand feed. Coolant—Compound, two ¾-in. streams. Average Life of Tool Between Grindings—200 pieces. Gages—Fig. 1324, length from lug to end; Fig. 1325, length from disassembling hole. Also for width and length of lug, and for contour of lug. Production—50 per hr.

OPERATION 8½. BURRING OPERATION 8

Number of Operators—One. Description of Operation—Removing burrs thrown up by operation 8. Apparatus and Equipment Used—File. Production—600 per hr.

OPERATION 9. PROFILING UNDERCUTS ON LUG AND TENON

Transformation—Fig. 1326. Machine Used—Pratt & Whitney No. 2 profiler. Number of Operators per Machine—One. Work-Holding Devices—Held in vise jaws; pushed up to stop at top by cam, Fig. 1327; notice profiling forms. Tool-Holding Devices—Taper shank. Cutting Tools—Two small milling cutters, one for tenon on front end, the other for tenon on lug. Number of Cuts—Two. Cut Data—1,200 r.p.m.; hand feed. Coolant—Compound, two ¼-in. streams. Average Life of Tool Between Grindings—200 pieces. Gages—One for front tenon; one for width of slots; one for position of undercut; and one for width of undercut on lug. Production—40 per hr.

slot. Production—75 pieces per hr. Note—Work held against upper face by cam.

OPERATION 13. MILLING BOTTOM LENGTHWISE

Transformation—Fig. 1335. Machine Used—Pratt & Whitney No. 2 Lincoln miller. Number of Operators per Machine—One. Work-Holding Devices—Held lengthwise, clamped on lug at rear, Fig. 1336. Tool-Holding Devices—Standard arbor. Cutting Tools—Formed milling cutter, 2.70 in. diameter, 1.25 in. wide, face hollow with 1.795 in. radius, 24 straight teeth. Number of Cuts—One. Cut Data—60 r.p.m.; ⅝-in. feed. Coolant—Compound, ¼-in. stream. Average Life of Tool Between Grindings—5000 pieces. Gages—Form of bottom, Fig. 1337. Production—20 per hr. Note—Two at a time.

OPERATION 13½. BURRING OPERATION 13

Number of Operators—One. Description of Operation—Removing burrs thrown up by operation 13. Apparatus and Equipment Used—File. Production—450 per hr.

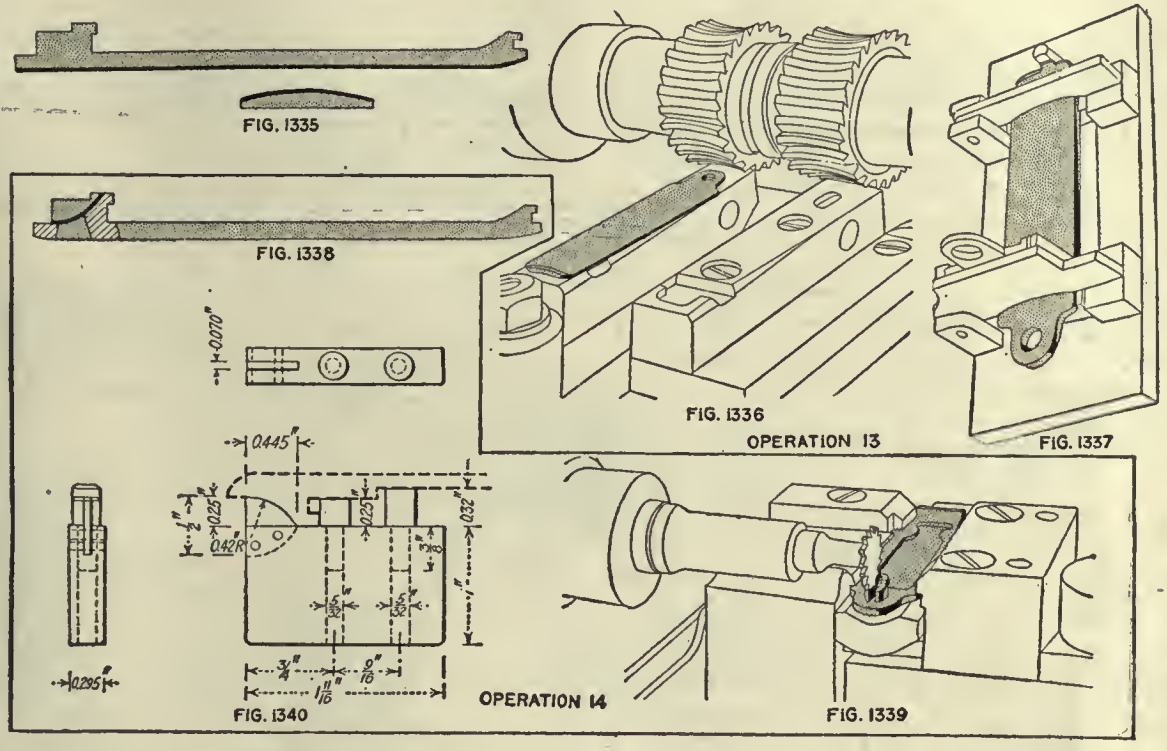

OPERATION 9½. FILING LUGS TO MATCH PROFILING AND MILLING CUTS

Number of Operators—One. Description of Operation—Blending cuts together. Apparatus and Equipment Used—File. Production—125 per hr.

OPERATIONS 10 AND 10½. HAND-MILLING FOR FRONT AND REAR END OF MAGAZINE-SPRING RECESS

Transformation—Figs. 1328 and 1329. Machine Used—Whitney hand miller. Number of Operators per Machine—One. Work-Holding Devices—Vise jaws; work pushed to stop (see operation 14). Tool-Holding Devices—Taper shank. Cutting Tools—Milling cutter 2.1875 in. diam. and 0.365 in. wide for operation 10, and one 2.68 in. diam. and 0.6 in. wide, with radius of 0.05 in. on corners for operation 10½. Number of Cuts—One. Cut Data—450 r.p.m.; hand feed. Coolant—Cutting oil, put on with brush. Average Life of Tool Between Grindings—300 pieces. Gages—Depth and width. Production—125 pieces per hr. Note—Same fixture as operation 14; operations 10 and 10½ use same machine and fixture with a change of cutters.

OPERATION 11. PROFILING MAGAZINE-SPRING RECESS TO FORM AND DEPTH

Transformation—Fig. 1330. Machine Used—Pratt & Whitney No. 2 profiler. Number of Operators per Machine—One. Work-Holding Devices—Vise jaws; stop at end, Fig. 1331. Tool-Holding Devices—Taper shank. Cutting Tools—Profiling cutters for spring recess. Number of Cuts—Two. Cut Data—1,200 r.p.m.; hand feed. Coolant—Compound, two ¼-in. streams. Average Life of Tool Between Grindings—200 pieces. Gages—Form, Fig. 1332. Production—35 per hr.

OPERATION 11½. BURRING OPERATION 11

Number of Operators—One. Description of Operation—Removing burrs thrown up by operation 11. Apparatus and Equipment Used—File. Production—900 per hr.

OPERATION 12. PROFILING UNDERCUTS FOR MAGAZINE-SPRING SEAT

Transformation—Fig. 1333. Machine Used—Pratt & Whitney No. 2 profiler. Number of Operators per Machine—One. Work-Holding Devices—By cam-operated vise jaws; pushed to stop at rear end, Fig. 1334; also carries profiling form. Tool-Holding Devices—Taper shank. Cutting Tools—Small undercut milling cutter, 0.44 in. diameter, 0.035 in. thick. Number of Cuts—One. Cut Data—1,200 r.p.m.; hand feed. Coolant—Compound, ¼-in. stream. Average Life of Tool Between Grindings—250 pieces. Gages—Width and depth of

OPERATION 14. HAND-MILLING FLOOR-PLATE CATCH SLOT IN REAR LUG

Transformation—Fig. 1338. Machine Used—Whitney hand miller. Number of Operators per Machine—One. Work-Holding Devices—Held by vise jaws; work pushed to stop and up against top, Fig. 1339. Tool-Holding Devices—Taper shank. Cutting Tools—Milling cutter, for undercutting, 0.84 in. diameter, 0.07 in. thick, 14 teeth. Number of Cuts—One. Cut Data—450 r.p.m.; hand feed. Coolant—Cutting oil, put on with brush. Average Life of Tool Between Grindings—300 pieces. Gages—Fig. 1340. Production—125 pieces per hr.

OPERATION 14½. FINISH STRAIGHTENING

Number of Operators—One. Description of Operation—Straightening to finish lead block. Apparatus and Equipment Used—Hammer, straight-edge copper hammer. Gages—Straight-edge. Production—80 pieces per hr.

OPERATION 20. FILING, GENERAL

Number of Operators—One. Description of Operation—Filing and finishing. Apparatus and Equipment Used—Files. Gages—One for gaging top; a second for front and rear tenons to gage; and a duplicate of guard to see how plate fits. Production—20 per hr.

OPERATION 21. POLISHING

Number of Operators—One. Description of Operation—Polishing outside surfaces of floor plate. Apparatus and Equipment Used—Polishing jack and wheel. Production—35 per hr.

OPERATION 22. FILING, CORNERING

Number of Operators—One. Description of Operation—Filing and general cornering. Apparatus and Equipment Used—Files. Production—125 per hr.

OPERATION 23. BLUING

Number of Operators—One. Description of Operation—Same as all other bluing operations on other parts.

FLOOR-PLATE PIN OPERATION

Machine Used—Hartford automatic. Number of Machines per Operator—Five. Work-Holding Devices—Held in draw-in chuck. Tool-Holding Devices—Box tool in turret; cutoff crossfeed carriage. Cutting Tools—Box tool and formed cutting-off tool. Number of Cuts—Two. Cut Data. 1500 r.p.m.; ¼-in. feed. Coolant—Cutting oil, ⅜-in. stream. Average Life of Tool Between Grindings—3,000 pieces. Gages—For length; round end; and diameter. Production—180 pieces per hr.

The Floor-Plate Catch

The floor-plate catch hinges on the floor-plate pin and is operated by a small spring known as the floor-plate spindle. The function of the floor-plate catch is to retain the floor plate in its seat.

While a small piece it is all the more difficult to handle on that account, but the special fixtures shown herewith enable it to be machined at a good production rate. As with many other parts these are handled two at a time, as in Fig. 1351, where both the top and bottom are milled.

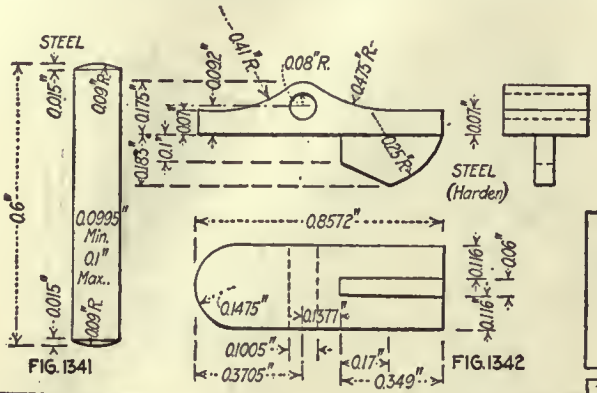

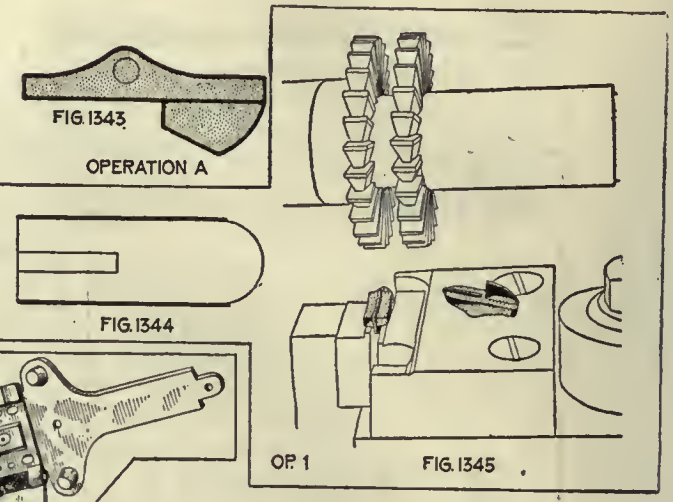

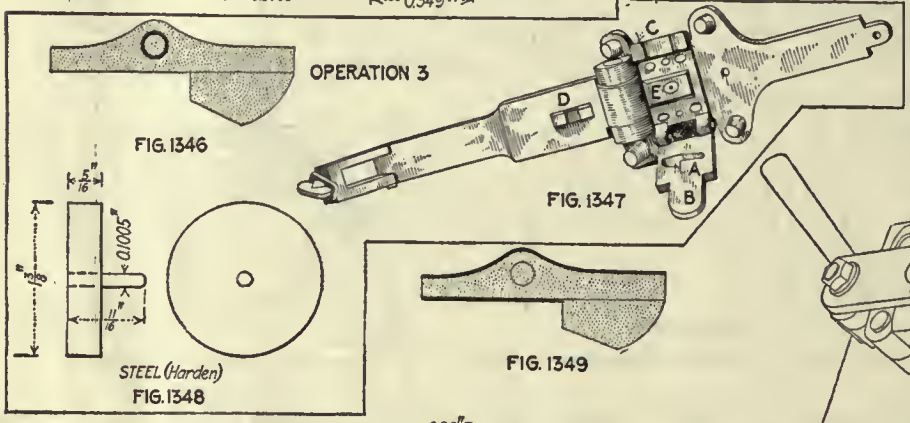

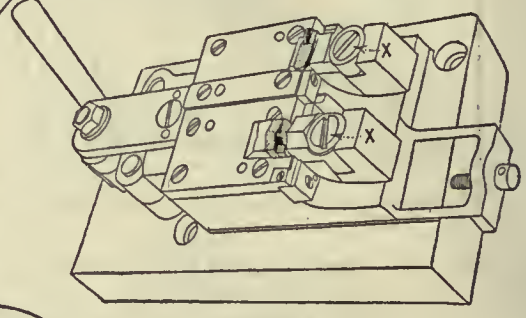

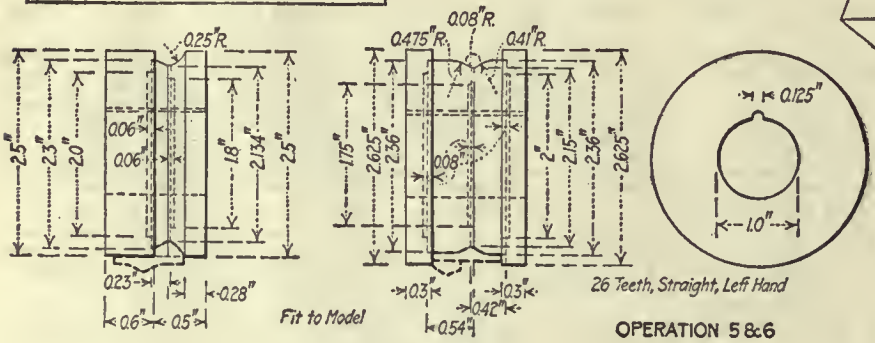

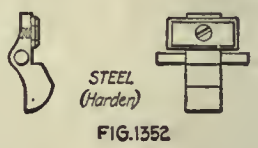

OPERATIONS ON FLOOR-PLATE CATCH

Operation	
A	Forging from bar
B	Annealing
B-1	Pickling
C	Trimming
1	Straddle-milling both sides
3	Drilling pin hole
4	Reaming pin hole
5	Milling top
AA	Removing burrs left by operation 5
6	Milling bottom
BB	Removing burrs left by operation 6
7	Milling tongue straddle
CC	Removing burrs left by operation 7
8	Hand-milling rear end
DD	Removing burrs from pin hole
10	Countersinking, reaming pin hole (10 and 11 grouped)
11	Rotary filing upper corners and circle of tongue
9	Filing front end (in jig) and general cornering
12	Case hardening

OPERATION A. FORGING FROM BAR

Transformation—Fig. 1343. Number of Operators—One. Description of Operation—Shaping from bar. Apparatus and Equipment Used—Billings & Spencer 400-lb. drop hammer. Production—160 per hr.

OPERATION B. ANNEALING

Number of Operators—One. Description of Operation—Placed in iron pots packed with powdered charcoal heated to 850 deg. C. (1,562 deg. F.); left overnight to cool. Apparatus and Equipment Used—Brown & Sharpe annealing furnaces; oil burner and powdered charcoal.

OPERATION B-1. PICKLING

Number of Operators—One. Description of Operation—Placed in wire baskets and then in the pickling solution, which consists of 1 part sulphuric acid to 9 parts water; left in this from 10 to 12 min. Apparatus and Equipment Used—Wire baskets, pickling tanks, hand hoist.

OPERATION C. TRIMMING

Machine Used—Perkins No. 19 press, 1½-in. stroke. Number of Operators per Machine—One. Punches and Punch Holders—Square shank. Dies and Die Holders—Setscrew in shoe. Stripping Mechanism—Work punched through die. Average Life of Punches and Dies—15,000 pieces. Production—650 per hr.

OPERATION 1. STRADDLE-MILLING BOTH SIDES

Transformation—Fig. 1344. Machine Used—Whitney hand miller. Number of Operators per Machine—One. Work-Holding Devices—Special vise jaws, Fig. 1345. Tool-Holding Devices—Standard arbor. Cutting Tools—Two 3x$\frac{1}{16}$-in. side-milling cutters. Number of Cuts—One. Cut Data—450 r.p.m.; hand feed. Coolant—Cutting oil, $\frac{1}{16}$-in. stream. Average Life of Tool Between Grindings—1,500 pieces. Gages—Thickness.

OPERATION 3. DRILLING PIN HOLE

Transformation—Fig. 1346. Machine Used—Woodward single-spindle 16-in. upright. Number of Operators per Machine—One. Work-Holding Devices—Drill jig, Fig. 1347; A shows jig open, B with one holding leaf closed. Tool-Holding Devices—Drill chuck. Cutting Tools—No. 40 drill. Number of Cuts—One. Cut Data—750 r.p.m.; hand feed. Coolant—Cutting oil, $\frac{1}{16}$-in. stream. Average Life of Tool Between Grindings—200 pieces. Production—90 pieces per hr.

OPERATION 4. REAMING PIN HOLE

Machine Used—Woodward single-spindle 16-in. upright. Number of Operators per Machine—One. Work-Holding Devices—Held by pins; steel block. Tool-Holding Devices—Drill chuck. Cutting Tools—Reamer, round end, 0.1005 in. diameter

Number of Cuts—One. Cut Data—750 r.p.m.; hand feed. Coolant—Cutting oil, ⅛-in. stream. Average Life of Tool Between Grindings—200 pieces. Gages—Fig. 1348, diameter of hole and squareness of hole with body. Production—450 pieces per hr.

OPERATIONS 5 AND 6. MILLING TOP AND BOTTOM

Transformation—Fig. 1349. Machine Used—Pratt & Whitney No. 2 Lincoln miller. Number of Machines per Operator—Four. Work-Holding Devices—Held on pins; clamped by jaws; Fig. 1350 shows piece in left jaws X for milling top; the other jaws for milling bottom. Tool-Holding Devices—Standard arbor. Cutting Tools—Milling cutters, Fig. 1351. Number of Cuts—One. Cut Data—70 r.p.m.; ⅝-in. feed. Coolant—Cutting oil, put on with brush. Average Life of Tool Between Grindings—5,000 pieces. Gages—Fig. 1352. Production—40 pieces per hr.

OPERATION AA. REMOVING BURRS LEFT BY OPERATION 5

Number of Operators—One. Description of Operation—Removing burrs thrown up by operation 5. Apparatus and Equipment Used—File. Production—Grouped with operations 5 and 6.

OPERATION BB. REMOVING BURRS LEFT BY OPERATION 6

Number of Operators—One. Description of Operation—Removing burrs thrown up by operation 6. Apparatus and Equipment Used—File. Production—300 pieces per hr.

OPERATION 7. MILLING TONGUE STRADDLE

Transformation—Fig. 1353. Machine Used—Pratt & Whitney No. 2 Lincoln miller. Number of Machines per Operator—Three. Work-Holding Devices—Held on pin; clamped by vise jaws, Fig. 1354. Tool-Holding Devices—Standard arbor. Cutting Tools—Straddle milling cutters 2.50 in. diameter, 0.375 in. wide, 26 teeth. Number of Cuts—One. Cut Data—70 r.p.m.; ⅝-in. feed. Coolant—Cutting oil, put on with brush. Average Life of Tool Between Grindings—5,000 pieces. Gages—Width and location of tongue, Fig. 1355. Production—40 pieces per hr.

OPERATION CC. REMOVING BURRS LEFT BY OPERATION 7

Number of Operators—One. Description of Operation—Removing burrs thrown up by operation 7. Apparatus and Equipment Used—File. Production—Grouped with operation 7.

OPERATION 8. HAND-MILLING REAR END

Transformation—Fig. 1356. Machine Used—Goes on any hand miller. Number of Operators per Machine—One. Work-Holding Devices—Held upright on pin; clamped by jaws, Fig. 1357. Tool-Holding Devices—Taper shank. Cutting Tools—Milling cutters, Fig. 1358. Number of Cuts—One. Cut Data—650 r.p.m.; hand feed. Coolant—Cutting oil, put on with brush. Average Life of Tool Between Grindings—5,000 pieces. Gages—Form of end, Fig. 1359. Production—300 pieces per hr.

OPERATION DD. REMOVING BURRS FROM PIN HOLE

Number of Operators—One. Description of Operation—Removing burrs thrown up around pin hole. Apparatus and Equipment Used—Speed lathe and reamer. Production—400 per hr.

OPERATION 10. COUNTERSINKING, REAMING PIN HOLE

Number of Operators—One. Description of Operation—Rounding corners of pin hole and reaming. Apparatus and Equipment Used—Speed lathe, countersink and reamer. Production—1,000 pieces per hr.

OPERATION 11. ROTARY FILING UPPER CORNERS AND CIRCLE OF TONGUE

Number of Operators—One. Description of Operation—Rotary filing corners and circle of tongue. Apparatus and Equipment Used—Rotary file. Production—175 per hr.

OPERATION 9. FILING FRONT END (IN JIG) AND GENERAL CORNERING

Number of Operators—One. Description of Operation—Filing (in jig) front end. Apparatus and Equipment Used—Jig and file. Production—70 pieces per hr.

OPERATION 12. CASEHARDENING

Number of Operators—One. Description of Operation—Packed in whole new bone, heated to 750 deg. C. (1,382 deg. F.) for 2½ hr., quenched in oil. Apparatus and Equipment Used—Same equipment as for other casehardening.

The Magazine Spring

The magazine spring is of somewhat peculiar construction, so made as to have a long range of action with a comparatively light tension at all points. The small end slides into the undercut on the follower, and the large end fits the undercuts in the floor plate in a similar manner.

This spring is somewhat peculiar in its ease and uniformity of action, as well as its freedom from breakage in spite of being doubled back on itself. The roughing of the corners over a pin, as in Fig. 1367, accounts for much of this, and although the apparatus is simple in design it does the work admirably. The dies for bending the spring into its *M* shape are also of special interest. Fig. 1364 shows the dies open and a spring laid on them just as it leaves the die, while Fig. 1365 shows the dies closed. These show the way in which the bending forms are made in sections and fastened to the proper sliding shoes. This makes them easily renewable for wear, as well as adjustable for position. The operation of these dies is very easy and rapid, the blank strip being laid in between the dies and against stops to insure correct bending.

The final shaping of the ends in Fig. 1372 is the last touch which seems to be necessary to make the spring just right. The bending dies do not seem to be able to get just the proper set to have the spring hold firmly and fit easily under the lugs in the floor plate and follower.

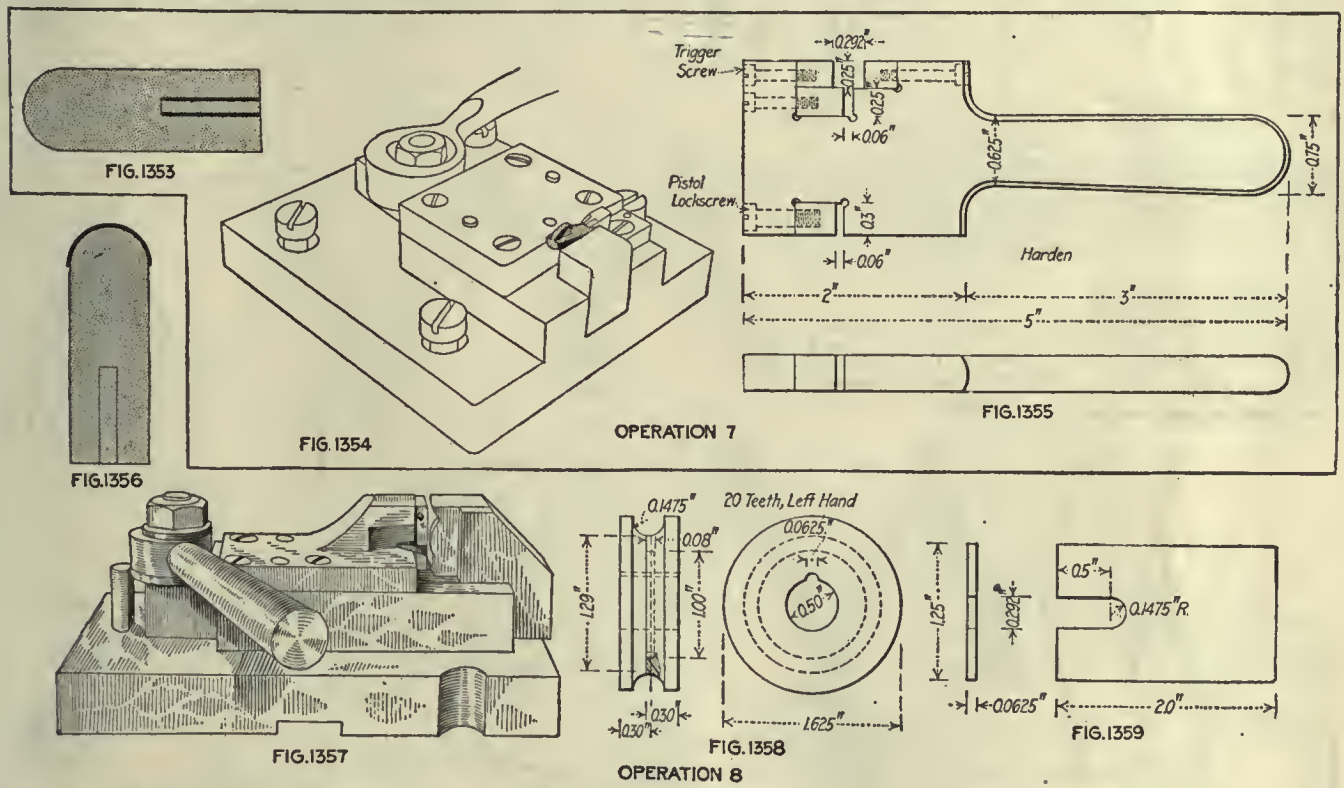

OPERATIONS ON MAGAZINE SPRING

Operation
- A Blanking from sheet cast steel
- I Burring operation A
- B First bending
- C Second bending to form eyes
- D Cutting off spring to finish shape
- E Third bending to finish shape
- F Hardening
- G Tempering
- H Correcting shape

OPERATION A. BLANKING FROM SHEET CAST STEEL

Transformation—Fig. 1361. Machine Used—Perkins No. 19 press. Number of Operators per Machine—One. Punches and Punch Holders—Round-shank pivot holder. Dies and Die Holders—Held in shoe by taper key. Stripping Mechanism—Steel stripper, screwed to face of die. Average Life of Punches—15,000 pieces. Lubricant—Stock coated with cutting oil. Gages—Width at different points, Fig. 1362. Production—500 pieces per hr.

OPERATION I. BURRING OPERATION A

Number of Operators—One. Description of Operation—Removing burrs from operation A. Apparatus and Equipment Used—Abrasive wheel. Production—350 pieces per hr.

OPERATION B. FIRST BENDING

Transformation—Fig. 1363. Number of Operators—One. Description of Operation—Bending spring to shape; strip is laid between dies; foot treadle closes the formers, making the center bend; a handwheel closes the side forms, thus completing the first bend (see Figs. 1364 and 1365). Apparatus and Equipment Used—Bending fixture, Fig. 1364, dies open; Fig. 1365, dies closed. Production—325 per hr.

OPERATION C. SECOND BENDING TO FORM EYES

Transformation—Fig. 1366. Number of Operators—One. Description of Operation—Forming eyes to shape with bench fixture, Fig. 1367; bend of spring is placed over the pin, and the block is swung down; then a light hammer blow sets the spring over the pin and forms the eye. Apparatus and Equipment Used—Fig. 1367 fixture. Production—350 per hr.

OPERATION D. CUTTING OFF SPRING TO FINISH SHAPE

Transformation—Fig. 1368. Machine Used—Old Perkins press, 1½-in. stroke. Number of Operators per Machine—One. Punches and Punch Holders—Round shank; punch and dies are centered by two pins at each end, Fig. 1369; spring is set with bend against a stop; a knife cuts the end against the lower blade. Dies and Die Holders—Screwed to plate and bed of press. Stripping Mechanism—None. Gages—Length of ends, Fig. 1370. Production—600 pieces per hr. Note—Three holes for cutting end; when one hole is dull, holder is moved along to next hole.

OPERATION E. THIRD BENDING TO FINISH SHAPE

Transformation—Fig. 1371. Number of Operators—One. Description of Operation—Curving the ends of spring on hand fixture, Fig. 1372; spring is placed with eye in notch and the end bent over the roll, as shown; this is done for each end. Apparatus and Equipment Used—Curved block screwed to bench, Fig. 1372. Production—325 pieces per hr.

OPERATION F. HARDENING

Number of Operators—One. Description of Operation—The spring is heated in an open oil fire to 1,450 deg. F., it is then quenched in oil and is ready for tempering. Apparatus and Equipment Used—Rockwell oil furnace and oil bath.

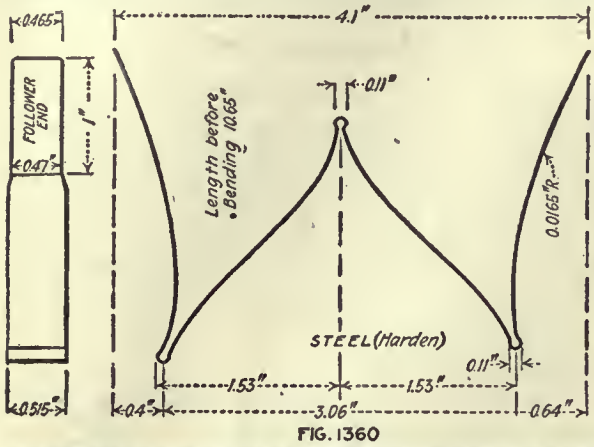

FIG. 1360

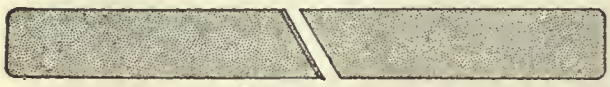
FIG. 1361

FIG. 1362

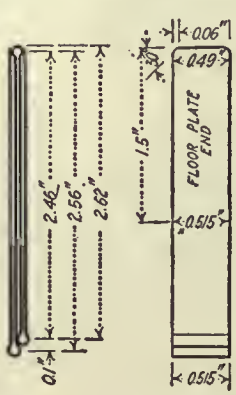

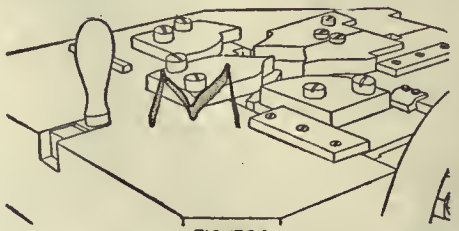
FIG. 1364

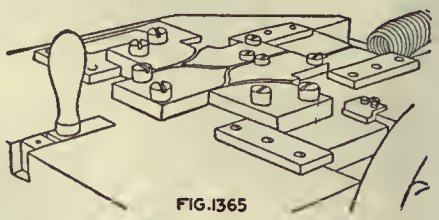
FIG. 1365

FIG. 1363

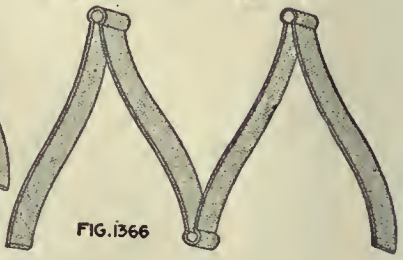
FIG. 1366

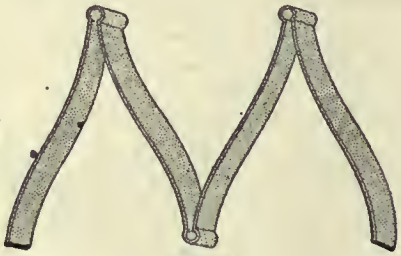
FIG. 1368

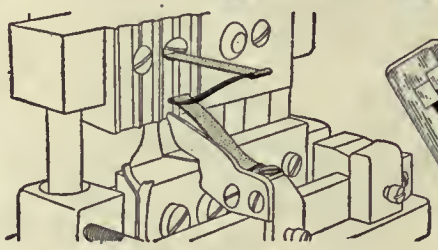
FIG. 1369

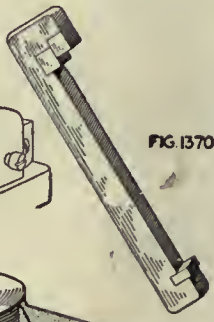
FIG. 1370

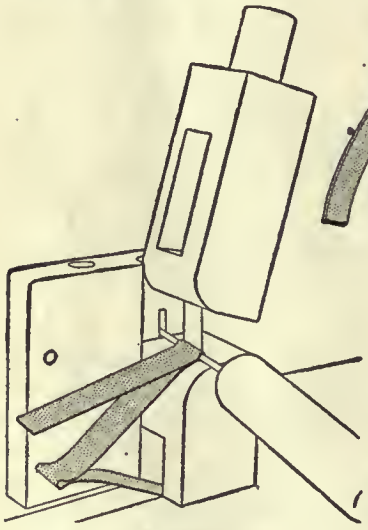
FIG. 1367

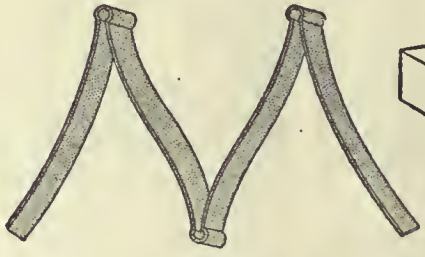
FIG. 1371

FIG. 1361, 1362, OP. A; FIG. 1363, 1364, 1365, OP. B; FIG. 1366, 1367, OP. C
FIG. 1368, 1369, 1370, OP. D.- FIG. 1371, 1372 OP. E

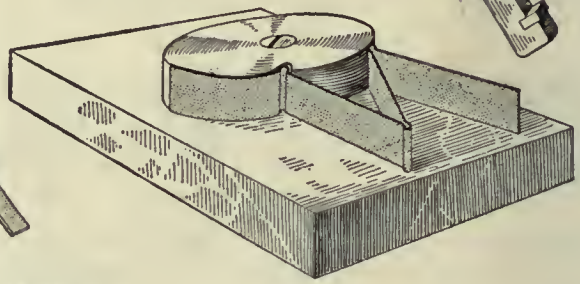
FIG. 1372

OPERATION G. TEMPERING

Number of Operators—One. Description of Operation—Heated in bath of niter (saltpeter) to 800 deg. F.; quenched in water. Apparatus and Equipment Used—Equipment is regular bluing equipment, same as for other parts.

OPERATION H. CORRECTING SHAPE

Number of Operators—One. Description of Operation—The spring is apt to get out of shape in hardening and tempering, and as the different portions of the spring must be in line when compressed, they often require straightening; the straightness is tested by laying the spring on a flat plate, and if it must be straightened the operator takes a pair of pliers in each hand, holds the spring over an open flame, to heat sufficiently to avoid breaking, and bends the spring into its correct shape. Apparatus and Equipment Used—Bench plate and two pairs of pliers.

Cutoff

The cutoff that determines whether the rifle shall be used as a single shot or as a magazine is illustrated in Fig. 1373. It consists of a thumb-piece, the body, the magazine fire groove, the dismounting groove, the cutoff-spindle hole, the cutoff-plunger hole, the cutoff-screw hole and the serration on the thumb-piece. The opposite side of the thumb-piece carries the words "On" and "Off" to show whether or not the magazine is in position to be used. When the cutoff thumb-piece is turned down and the word "Off" shows, the rear end of the slotted locking lug of the bolt strikes against the projecting front end of the cutoff body. This prevents the cartridge from coming up from the magazine, and the arm is in position to be used as a single-shot rifle. The other position of the thumb-piece allows the cartridge to feed up from the magazine.

OPERATIONS ON THE CUTOFF

Operation	
A	Forging from bar
B	Annealing
B-1	Pickling
C	Trimming
1	Drilling, reaming, facing and hollow-milling
2	Milling rear end of thumb-piece (operations 2, 6 and 11 combined)
3	Milling right side
4	Milling left side
AA	Removing burrs from spindle hole and burrs left from operations 3 and 4
6	Counterboring rear end of body (operation 6 combined with operations 2 and 11)
7	Stamping sides of thumb-piece ("On" and "Off")
8	Drilling for spring, drilling and counterboring for spindle screw and reaming spindle hole
BB	Removing burrs from spindle hole (operations 2, 6, 11, AA and BB grouped)
11	Profiling under side of thumb-piece (combined with operation 2)
9	Profiling bolt stop
10	Milling bolt clearance
13	Hand-milling groove, end of thumb-piece
EE	Removing burrs left by operation 10
FF	Removing burrs from spring spindle and screw holes and those left by operation 13
14	Tapping spindle screw hole
CC	Removing burrs from spindle hole
12	Hand-milling corners, front and rear
DD	Removing burrs left by operation 12
15	Reaming and countersinking spindle hole
16	Polishing outer surface
17	Filing, general cornering
18	Casehardening
19	Polishing "On" side of thumb-piece
20	Assembling with screw, spring plunger and spindle

OPERATION A. FORGING FROM BAR

Transformation—Fig. 1374. Number of Operators—One. Description of Operation—Shaping from bar. Apparatus and Equipment Used—Billings & Spencer 400-lb. drop hammer. Production—175 per hr.

OPERATION B. ANNEALING

Number of Operators—One. Description of Operation—Placed in iron pots, packed with powdered charcoal, heated to 850 deg. C. (1,562 deg. F.) and left over night to cool. Apparatus and Equipment Used—Brown & Sharpe annealing furnace, oil burner, powdered charcoal.

OPERATION B-1. PICKLING

Number of Operators—One. Description of Operation—Placed in wire baskets and then put in the pickling solution which consists of 1 part sulphuric acid to 9 parts water, and left in this from 10 to 12 min. Apparatus and Equipment Used—Wire baskets, pickling tanks, hand hoist.

OPERATION C. TRIMMING

Machine Used—Bliss back-geared press, 2-in. stroke. Number of Operators per Machine—One. Production—700 per hr

OPERATION 1. DRILLING, REAMING, FACING AND HOLLOW-MILLING

Transformation—Fig. 1375. Machine Used—Pratt & Whitney No. 2½ hand screw machine. Number of Operators per Machine—One. Work-Holding Devices—Held in two-jaw chuck, Fig. 1376. Tool-Holding Devices—In turret. Cutting Tools—Turret tools; reamer; box-turning tool; facing mill; stem and collet for hollow and facing mills, and hollow mill. Number of Cuts—Six. Coolant—Cutting oil, ⅛-in. stream. Average Life of Tool Between Grindings—250 pieces. Gages—For diameter of hole and depth of counterbore. Production—25 pieces per hr.

OPERATIONS 2, 6, 11. MILLING REAR END OF THUMB-PIECE; COUNTERBORING REAR END OF BODY; PROFILING UNDER SIDE OF THUMB-PIECE

Transformation—Fig. 1377. Machine Used—Whitney hand milier. Number of Operators per Machine—One. Work-Holding Devices—Held by formed jaws. Tool-Holding Devices—Taper shank. Cutting Tools—Double milling cutter, large cutter screwed on shank behind front cutter. Number of Cuts—One. Cut Data—450 r.p.m.; hand feed. Coolant—Compound, ¼-in. stream. Average Life of Tool Between Grindings—5,000 pieces. Gages—For relation of wing to body; length; diameter; and diameter of counterbore. Production—800 pieces per hr

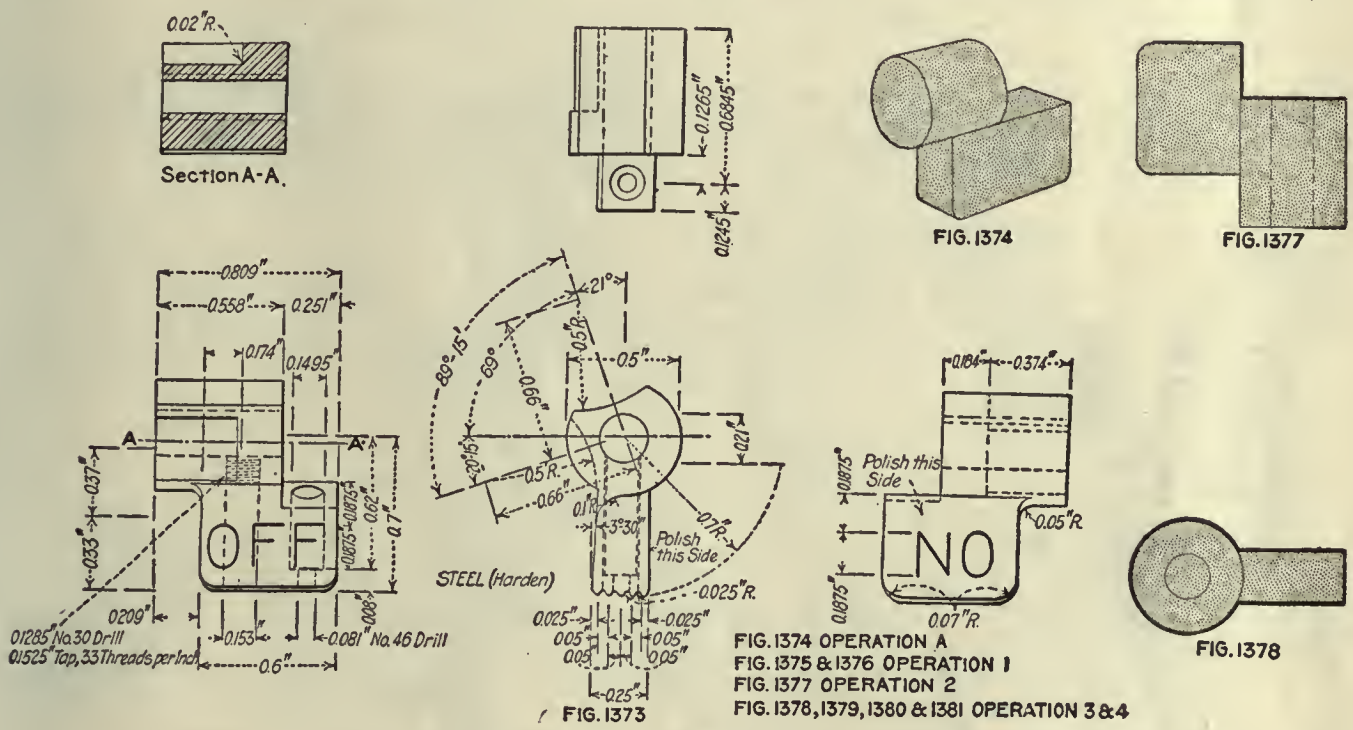

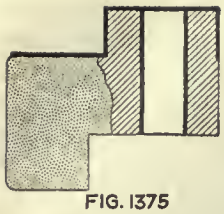

FIG. 1375

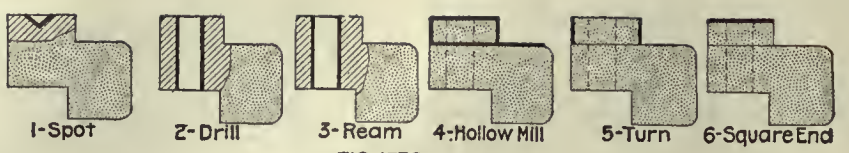

FIG. 1376

FIG. 1381

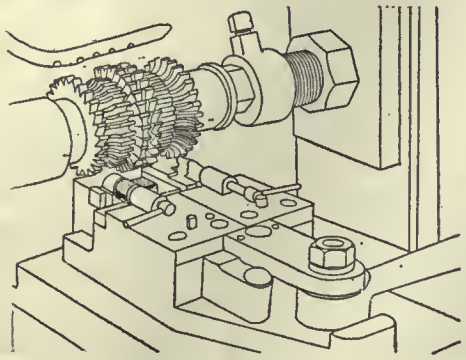

FIG. 1379

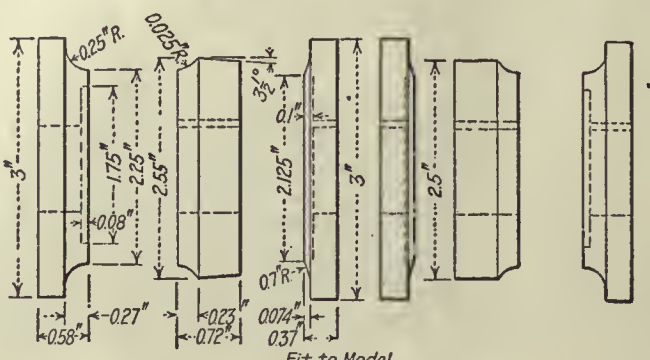

Fit to Model.
28 Teeth, Straight, Left Hand

FIG. 1380

OPERATIONS 3 AND 4. MILLING RIGHT AND LEFT SIDES

Transformation—Fig. 1378. Machine Used—Pratt & Whitney No. 2 Lincoln miller. Number of Machines per Operator—Five. Work-Holding Devices—Held by double vise jaws, Fig. 1379. Tool-Holding Devices—Standard arbor. Cutting Tools—Gang of milling cutters, Fig. 1380. Number of Cuts—One. Cut Data—60 r.p.m.; ⅝-in. feed. Coolant—Cutting oil, ⅛-in. stream. Average Life of Tool Between Grindings—5,000 pieces. Gages—Fig. 1381; radius of barrel and relation of wing to hole. Production—75 pieces per hr.

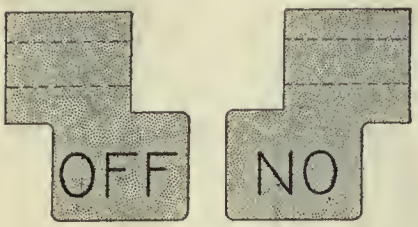

FIG. 1382

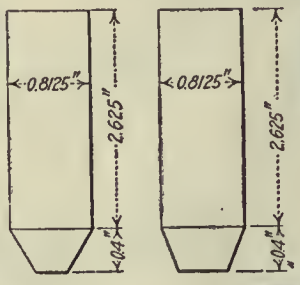

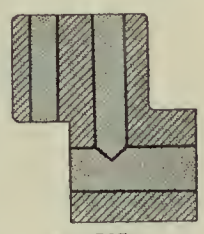

FIG. 1385

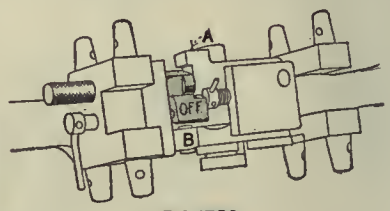

FIG. 1386

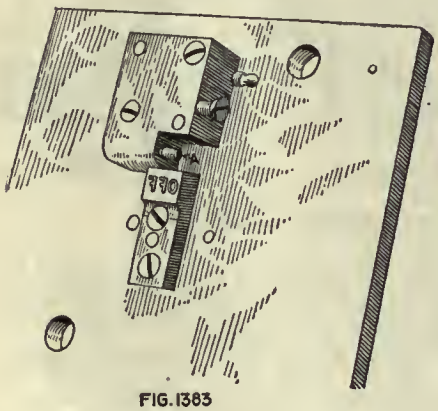

FIG. 1383

FIG. 1384

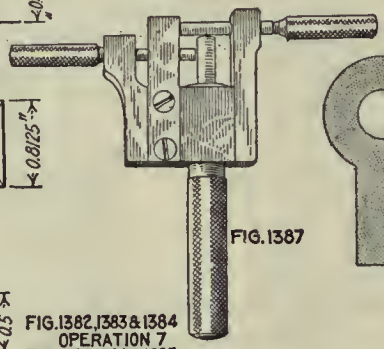

FIG. 1387

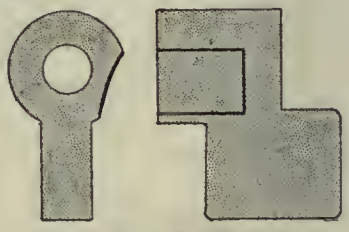

FIG. 1388

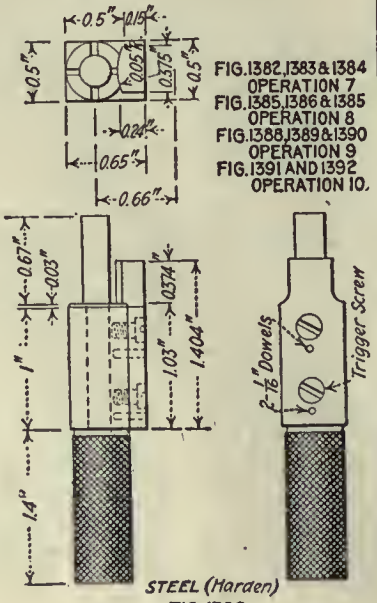

FIG. 1382, 1383 & 1384 OPERATION 7
FIG. 1385, 1386 & 1385 OPERATION 8
FIG. 1388, 1389 & 1390 OPERATION 9
FIG. 1391 AND 1392 OPERATION 10.

FIG. 1390

FIG. 1391

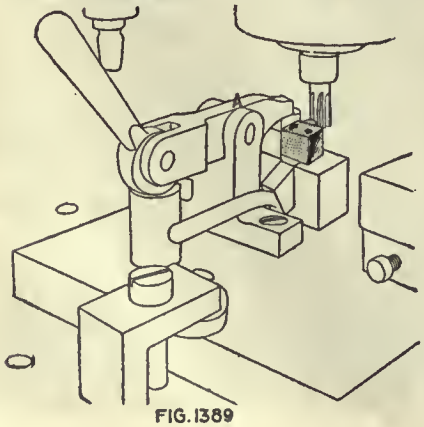

FIG. 1389

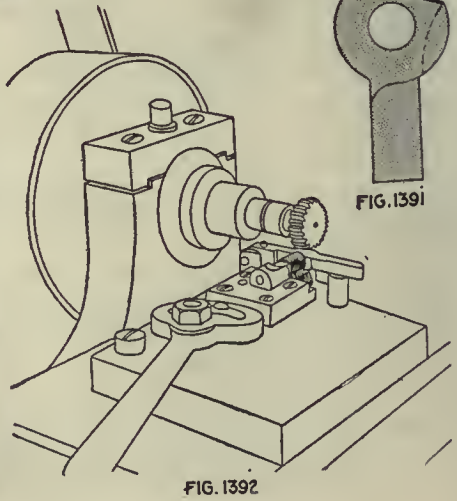

FIG. 1392

OPERATION AA. REMOVING BURRS FROM SPINDLE HOLE AND BURRS LEFT FROM OPERATIONS 3 AND 4

Number of Operators—One. Description of Operation—Removing burrs thrown up by operations 3 and 4. Apparatus and Equipment Used—File. Production—Grouped with operations 3 and 4.

OPERATION 7. STAMPING SIDES OF THUMB-PIECE

Transformation—Fig. 1382. Machine Used—Old Brooks press. Number of Operators per Machine—One. Punches and Punch Holders—Round shank. Dies and Die Holders—Die and fixture screwed to bed of press, Fig. 1383; the punch is illustrated in Fig. 1384. Stripping Mechanism—None. Gages—None. Production—450 pieces per hr. Note—Work held on pin A; stamps "Off" on the under side and "On" on the top side.

OPERATION 9. PROFILING BOLT STOP

Transformation—Fig. 1388. Machine Used—Wood-Light Co. profiler. Number of Operators per Machine—One. Work-Holding Devices—Held on pin; clamped by finger clamp A, Fig. 1389. Tool-Holding Devices—Taper shank. Cutting Tools—Profiling cutter 0.45 in. diameter, 7 teeth, right hand, 0.75 in. long. Number of Cuts—Two. Cut Data—1,200 r.p.m.; hand feed. Coolant—Compound, ¼-in. stream. Average Life of Tool Between Grindings—300 pieces. Gages—Fig. 1390; radius of cut and radius of barrel. Production—60 pieces per hr.

OPERATION 10. MILLING BOLT CLEARANCE

Transformation—Fig. 1391. Machine Used—Pratt & Whitney No. 0 hand miller. Number of Machines per Operator—Two. Work-Holding Devices—Held on pin; clamped by jaws.

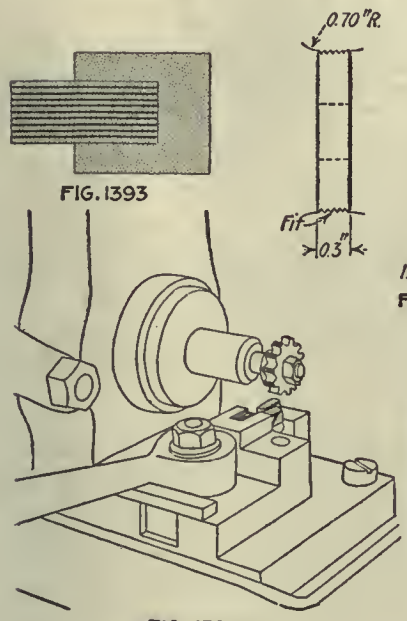

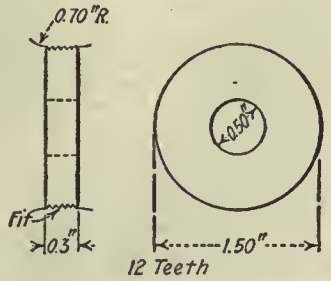

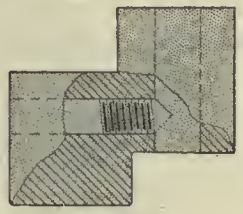

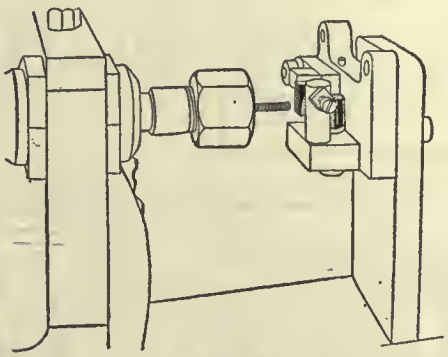

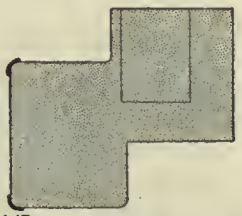

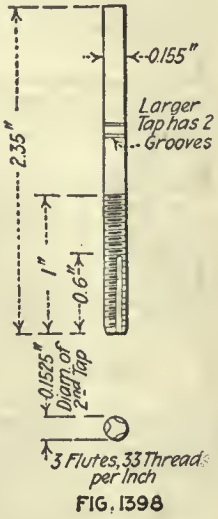

FIG. 1393, 1394 & 1395 OPERATION 13
FIG. 1396, 1397 & 1398 OPERATION 14
FIG. 1399, 1400, 1401 & 1402 OPERATION 12

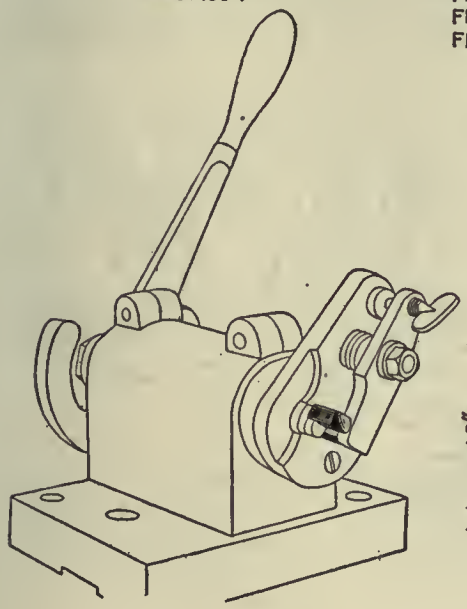

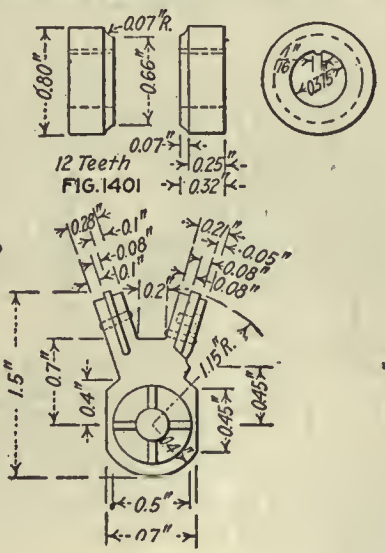

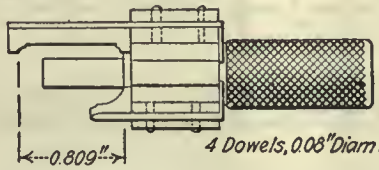

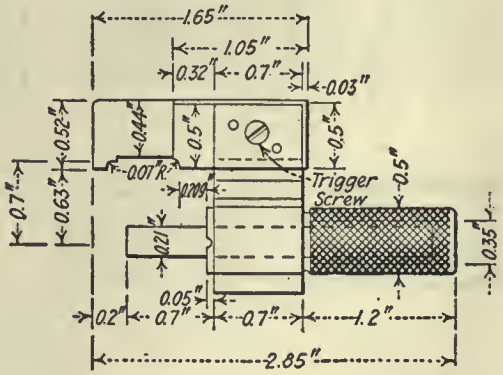

FIG. 1402

OPERATION 8. DRILLING FOR SPRING, DRILLING AND COUNTERBORING FOR SPINDLE SCREW AND REAMING SPINDLE HOLE

Transformation—Fig. 1385. Machine Used—Pratt & Whitney 16-in. four-spindle upright drilling machine. Number of Operators per Machine—One. Work-Holding Devices—Drill jig, Fig. 1386. Tool-Holding Devices—Drill chuck. Cutting Tools—Counterbore. Number of Cuts—Four. Cut Data—1,200 r.p.m.; hand feed. Coolant—Cutting oil, ⅛-in. stream. Average Life of Tool Between Grindings—200 pieces. Gages—Fig. 1387; diameter and depth and location from center hole. Production—38 pieces per hr.

OPERATION BB. REMOVING BURRS FROM SPINDLE HOLE

Number of Operators—One. Description of Operation—Removing burrs from spindle hole. Apparatus and Equipment Used—Reamer. Production—400 pieces per hr.

Fig. 1392. Tool-Holding Devices—Taper shank. Cutting Tools—Formed milling cutter 1.45 in. diameter, 0.50 in. wide. Outside convex to 0.50 radius. Number of Cuts—One. Cut Data—450 r.p.m.; hand feed. Coolant—Cutting oil, put on with brush. Average Life of Tool Between Grindings—5,000 pieces. Gages—None. Production—85 pieces per hr.

OPERATION 13. HAND-MILLING GROOVE, END OF THUMB-PIECE

Transformation—Fig. 1393. Machine Used—Pratt & Whitney hand miller. Number of Operators per Machine—One. Work-Holding Devices—Held on pin, using thumb-piece as stop, Fig. 1394. Tool-Holding Devices—Taper shank. Cutting Tools—Milling cutter, Fig. 1395. Number of Cuts—One. Cut Data—450 r.p.m.; hand feed. Coolant—Cutting oil, put on with brush. Average Life of Tool Between Grindings—5,000 pieces. Production—85 pieces per hr.

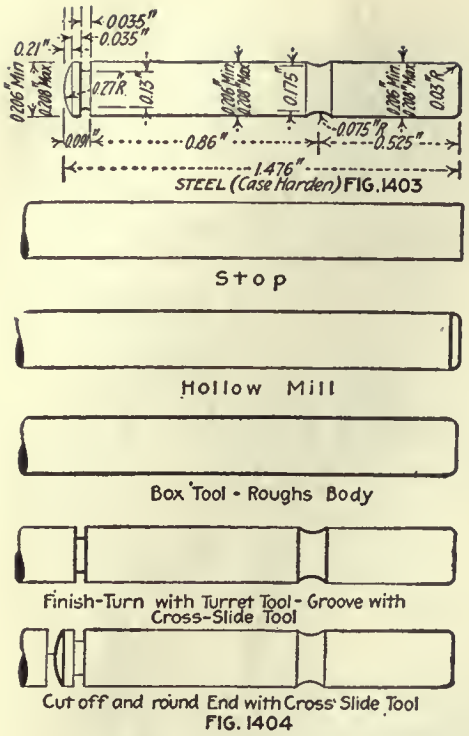

FIG. 1404

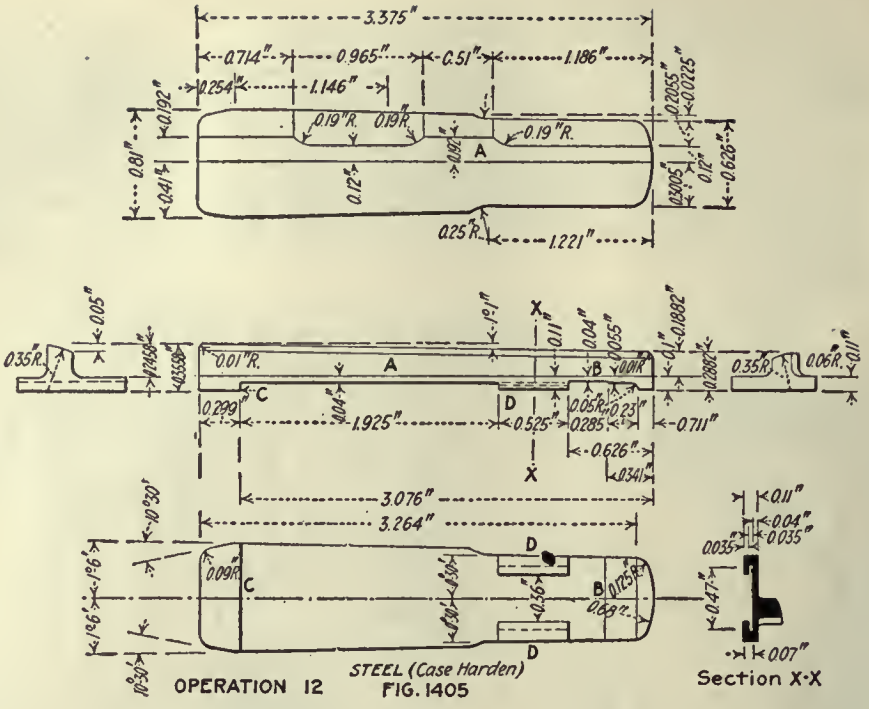

OPERATION EE. REMOVING BURRS LEFT BY OPERATION 10

Number of Operators—One. Description of Operation—Removing burrs thrown up by operation 10. Apparatus and Equipment Used—File. Production—Grouped with operations 10 and 13.

OPERATION FF. REMOVING BURRS FROM SPRING SPINDLE AND SCREW HOLES

Number of Operators—One. Description of Operation—Removing burrs thrown up around spindle hole. Apparatus and Equipment Used—Speed lathe and reamer, 0.1495 in. diameter. Production—Grouped with operations 10 and B.

OPERATION 14. TAPPING SPINDLE SCREW HOLE

Transformation—Fig. 1396. Machine Used—Tapping machine built at the Hill shop. Number of Operators per Machine—One. Work-Holding Devices—Held on pin; clamped by screw; fixture held in special tapping machine. Fig. 1397. Tool-Holding Devices—Taper screw chuck. Cutting Tools—Three fluted taps, Fig. 1398. Number of Cuts—One. Cut Data—150 r.p.m. Coolant—Cutting oil, $\frac{1}{4}$-in. stream. Average Life of Tool Between Grindings—5,000 pieces. Gages—Plug thread. Production—350 pieces per hr.

OPERATION CC. REMOVING BURRS FROM SPINDLE HOLE

Number of Operators—One. Description of Operation—Removing burrs thrown up around spindle hole. Apparatus and Equipment Used—Speed lathe and reamer. Production—800 pieces per hr.

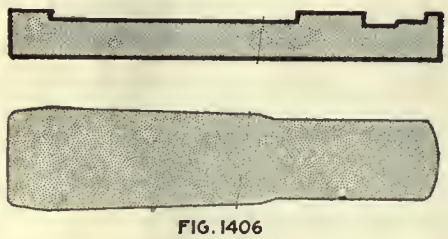
FIG. 1406
OPERATION A

FIG. 1407

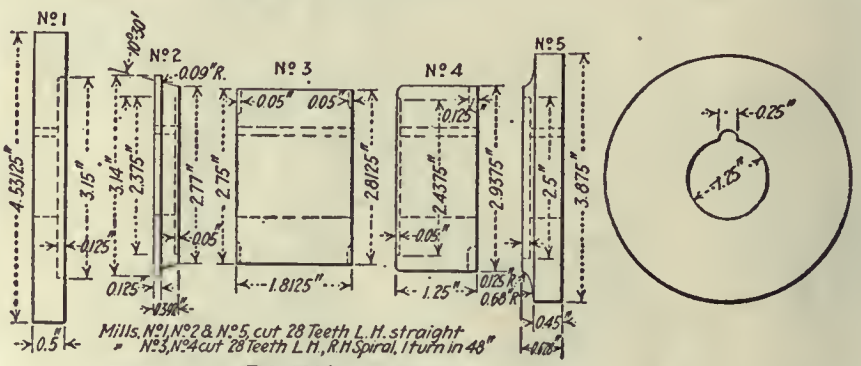

FIG. 1409

FIG. 1410

FIG. 1407, 1408 AND 1409 OPERATION 1 AND 3
FIG. 1410 AND 1411 OPERATION 2

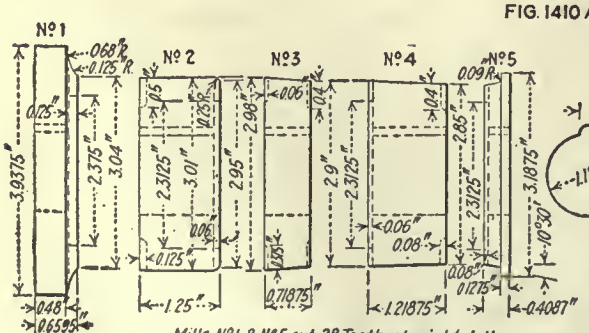

FIG. 1408

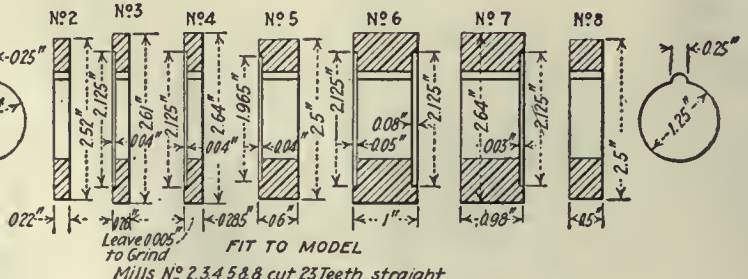

FIG. 1411

OPERATION 12. HAND-MILLING CORNERS, FRONT AND REAR END

Transformation—Fig. 1399. Machine Used—Garvin No. 2 hand miller Number of Operators per Machine—One. Work-Holding Devices—On pin in rotating fixture, Fig. 1400. Tool-Holding Devices—Taper shank Cutting Tools—Pair of milling cutters, Fig. 1401. Number of Cuts—One. Cut Data—650 r.p.m.; hand feed. Coolant—Cutting oil, put on with brush. Average Life of Tool Between Grindings—5,000 pieces. Gages—Fig. 1402, corners gaged from center hole. Production—350 pieces per hr.

OPERATION DD. REMOVING BURRS LEFT BY OPERATION 12

Number of Operators—One. Description of Operation—Removing burrs thrown up by operation 12. Apparatus and Equipment Used—File. Production—500 pieces per hr.

OPERATION 15. REAMING AND COUNTERSINKING SPINDLE HOLE

Number of Operators—One. Description of Operation—Reaming and countersinking hole. Apparatus and Equipment Used—Speed lathe, reamer and countersink. Production—500 pieces per hr.

OPERATION 16. POLISHING OUTER SURFACES

Number of Operators—One. Description of Operation—Polishing all outside surfaces. Apparatus and Equipment Used—Wheel and polishing jack. Production—50 pieces per hr.

OPERATION 17. FILING, GENERAL CORNERING

Number of Operators—One. Description of Operation—Filing and general cornering. Apparatus and Equipment Used—File. Production—90 pieces per hr.

OPERATION 18. CASEHARDENING

Number of Operators—One. Description of Operation—Packed in ¾ bone and ¼ leather; heated to 750 deg. C. (1,382 deg. F.) for 2½ hr.; quenched in water. Apparatus and Equipment Used—Same equipment as previously described.

OPERATION 19. POLISHING "ON" SIDE OF THUMB-PIECE

Number of Operators—One. Description of Operation—Polishing side of thumb-piece stamped "On." Apparatus and Equipment Used—Polishing jack and wheel. Production—350 pieces per hr.

OPERATION 20. ASSEMBLING WITH SCREW, SPRING PLUNGER AND SPINDLE

Number of Operators—One. Description of Operation—Assembling plunger and spring. Apparatus and Equipment Used—Pinchers and hands. Production—150 pieces per hr.

OPERATIONS ON CUTOFF SPINDLE

Operation	
1	Automatic
2	Polishing

OPERATION 1. AUTOMATIC

Transformation—See Fig. 1404. Machine Used—Acme automatic No. 515; tool layout, Fig. 1404. Number of Machines per Operator—Four. Work-Holding Devices—Held in draw-in chuck. Tool-Holding Devices—In turret. Cutting Tools—Tools for automatic, Fig. 1404; forming and cutting-off tools; also, shaving or turning tool. Number of Cuts—Four. Cut Data—1,200 r.p.m.; $\frac{5}{8}$-in. feed. Coolant—Cutting oil, $\frac{5}{8}$-in. stream. Average Life of Tool Between Grindings—1,200 pieces. Gages—For diameter; length; groove at one end, and groove at other end. Production—140 pieces per hr.

OPERATION 2. POLISHING

Number of Operators—One. Description of Operation—Polishing rear end. Apparatus and Equipment Used—Polishing jack and wheel. Production—1,430 pieces per hr. Note—Polish round end.

The Follower

The follower, shown in detail in Fig. 1405, has a rib *A* that serves to locate the cartridge in the magazine and guides the last cartridge into the chamber above. The front stop *B* is for the magazine spring, as is the rear stop *C*. The lugs *D* are the undercuts that hold the small end of the magazine spring.

OPERATIONS ON FOLLOWER

Operation	
A	Forging from bar
B	Annealing
B-1	Pickling
C	Trimming
D	Cold dropping
1 and 3	Milling right and left edges and rear end
2	Milling bottom and front end
AA	Removing burrs left by operation 2
4	Milling top lengthwise (straddle rib)
CC	Removing burrs left by operation 4
5	Profiling for spring, rough (operations 5 and 6 grouped)
6	Profiling for spring, finish
7	Profiling clearance left by rib
DD	Removing burrs left by operation 7
9	Milling top of rib
10	Polishing top, rib, edges and end
11	Filing, general cornering
12	Casehardening

OPERATION A. FORGING FROM BAR

Transformation—Fig. 1406. Number of Operators—One. Description of Operation—Shaping from bar. Apparatus and Equipment Used—Billings & Spencer 400-lb. drop hammer. Production—120 per hr.

OPERATION B. ANNEALING

Transformation—See Fig. 1406. Number of Operators—One. Description of Operation—Placed in iron pots, packed with powdered charcoal, heated to 850 deg. C. (1,562 deg. F.), left over night to cool. Apparatus and Equipment Used—Brown & Sharpe annealing furnace; oil burner and powdered charcoal.

OPERATION B-1. PICKLING

Number of Operators—One. Description of Operation—Placed in wire baskets and then put into the pickling solution, which consists of 1 part sulphuric acid to 9 parts water; left in this from 10 to 12 min. Apparatus and Equipment Used—Wire baskets, wooden pickling tanks, hand hoist.

OPERATION C. TRIMMING

Machine Used—Bliss back-geared press, 2-in. stroke. Number of Operators per Machine—One. Punches and Punch Holders—Square shank. Dies and Die Holders—Held by set-screw on shoe. Average Life of Punches—15,000 pieces. Dies—15,000 pieces. Production—500 per hr.

OPERATION D. COLD DROPPING

Number of Operators—One. Description of Operation—Straightening after trimming. Apparatus and Equipment Used—Billings & Spencer 400-lb. drop hammer. Production—600 per hr.

OPERATIONS 1 AND 3. MILLING RIGHT AND LEFT EDGES AND REAR END

Transformation—Fig. 1407. Machine Used—Pratt & Whitney No. 2 Lincoln miller. Number of Machines per Operator—Six. Work-Holding Devices—Clamped by vise jaws; the same vise holds follower for operations 1, 2 and 3. Tool-Holding Devices—Standard arbor. Cutting Tools—Gang of milling cutters, Figs. 1408 and 1409; one for left, one for right side. Number of Cuts—One. Cut Data—60 r.p.m.; $\frac{5}{8}$-in. feed. Coolant—Cutting oil, put on with brush. Average Life of Tool Between Grindings—5,000 pieces. Gages—Form. Production—35 pieces per hr.

OPERATION 2. MILLING BOTTOM AND FRONT END

Transformation—Fig. 1410. Machine Used—Pratt & Whitney Lincoln miller No. 2. Number of Machines per Operator—Five. Work-Holding Devices—Vise jaws, same as before. Tool-Holding Devices—Standard arbor. Cutting Tools—Gang of milling cutters, Fig. 1411. Number of Cuts—One. Cut Data—60 r.p.m.; $\frac{5}{8}$-in. feed. Coolant—Cutting oil, $\frac{1}{8}$-in. stream. Average Life of Tool Between Grindings—5,000 pieces. Gages—Profile. Production—35 pieces per hr.

OPERATION AA. REMOVING BURRS LEFT BY OPERATION 2

Number of Operators—One. Description of Operation—Removing burrs thrown up by operation 2. Apparatus and Equipment Used—File. Production—Grouped with operation 2.

OPERATION 4. MILLING TOP LENGTHWISE

Transformation—Fig. 1412. Machine Used—Pratt & Whitney No. 2 Lincoln miller. Number of Machines per Operator—Five. Work-Holding Devices—Clamped by vise jaws. Tool-Holding Devices—Standard arbor. Cutting Tools—Straddle milling cutters, 3 in. diameter; one 0.375 in. wide, other 0.50 in. wide. Inside corners rounded with 0.06 radius. Number of Cuts—One. Cut Data—60 r.p.m.; $\frac{5}{8}$-in. feed. Coolant—Cutting oil, put on with brush. Average Life of Tool Between Grindings—5,000 pieces. Gages—Fig. 1413; thickness of sides and thickness of rib. Production—35 pieces per hr.

OPERATION CC. REMOVING BURRS LEFT BY OPERATION 4

Number of Operators—One. Description of Operation—Removing burrs thrown up by operation 4. Apparatus and Equipment Used—File. Production—Grouped with operation 7.

OPERATIONS 5 AND 6. PROFILING FOR SPRING (ROUGH AND FINISH)

Transformation—Figs. 1414 and 1415, rough and finish. Machine Used—Pratt & Whitney No. 2 profiler. Number of Operators per Machine—One. Work-Holding Devices—Held by vise jaws; pushed to a stop, Fig. 1416; this also shows profiling form. Tool-Holding Devices—Cutter, taper shank. Cutting Tools—Milling Cutters, Fig. 1417; roughing and undercutting for spring. Number of Cuts—Two. Cut Data—1,200 r.p.m.; hand feed. Coolant—Cutting oil, ¼-in. stream. Average Life of Tool Between Grindings—350 pieces. Gages—Fig. 1418; width of slot and depth of spring undercut. Production—175 pieces per hr. Note—Operation 6 undercuts the lugs for holding the magazine spring.

OPERATION 7. PROFILING CLEARANCE LEFT BY RIB

Transformation—Fig. 1419. Machine Used—Pratt & Whitney No. 2 profiler. Number of Operators per Machine—One. Work-Holding Devices—On form, held by finger clamp, Fig. 1420; a movable finger is operated by a cam. Tool-Holding Devices—Taper shank. Cutting Tools—Milling, Fig. 1421. Cut Data—1,200 r.p.m.; hand feed. Coolant—Cutting oil, ¼-in. stream. Average Life of Tool Between Grindings—300 pieces. Gages—Profile. Production—80 pieces per hr.

OPERATION DD. REMOVING BURRS LEFT BY OPERATION 7

Number of Operators—One. Description of Operation—Removing burrs left by operation 7. Apparatus and Equipment Used—File. Production—600 pieces per hr

OPERATION 9. MILLING TOP OF RIB

Transformation—Fig. 1422. Machine Used—Pratt & Whitney No. 2 Lincoln millier. Number of Machines per Operator—Five. Work-Holding Devices—Clamped by vise jaws, Fig. 1423. Tool-Holding Devices—Standard arbor. Cutting Tools—Milling cutter, Fig. 1424. Number of Cuts—One. Cut Data—60 r.p.m.; ⅝-in. feed. Coolant—Cutting oil, ½-in. stream. Average Life of Tool Between Grindings—500 pieces. Gages—Fig. 1425; for height of rib. Production—35 pieces per hr., two at a time. Note—Same style of fixture as in operation 4.

OPERATION 10. POLISHING TOP, RIB, EDGES AND END

Number of Operators—One. Description of Operation—Polishing top, edges and ends. Apparatus and Equipment Used—Polishing jack and wheel. Production—35 pieces per hr.

OPERATION 11. FILING, GENERAL CORNERING

Number of Operators—One. Description of Operation—Finishing and cornering. Apparatus and Equipment Used—File. Production—40 pieces per hr.

OPERATION 12. CASEHARDENING

Number of Operators—One. Description of Operation—Packed in whole, new bone; heated to 750 deg. C. (1,382 deg. F.) for 2½ hr.; quenched in oil. Apparatus and Equipment Used—Same as other casehardening equipment.

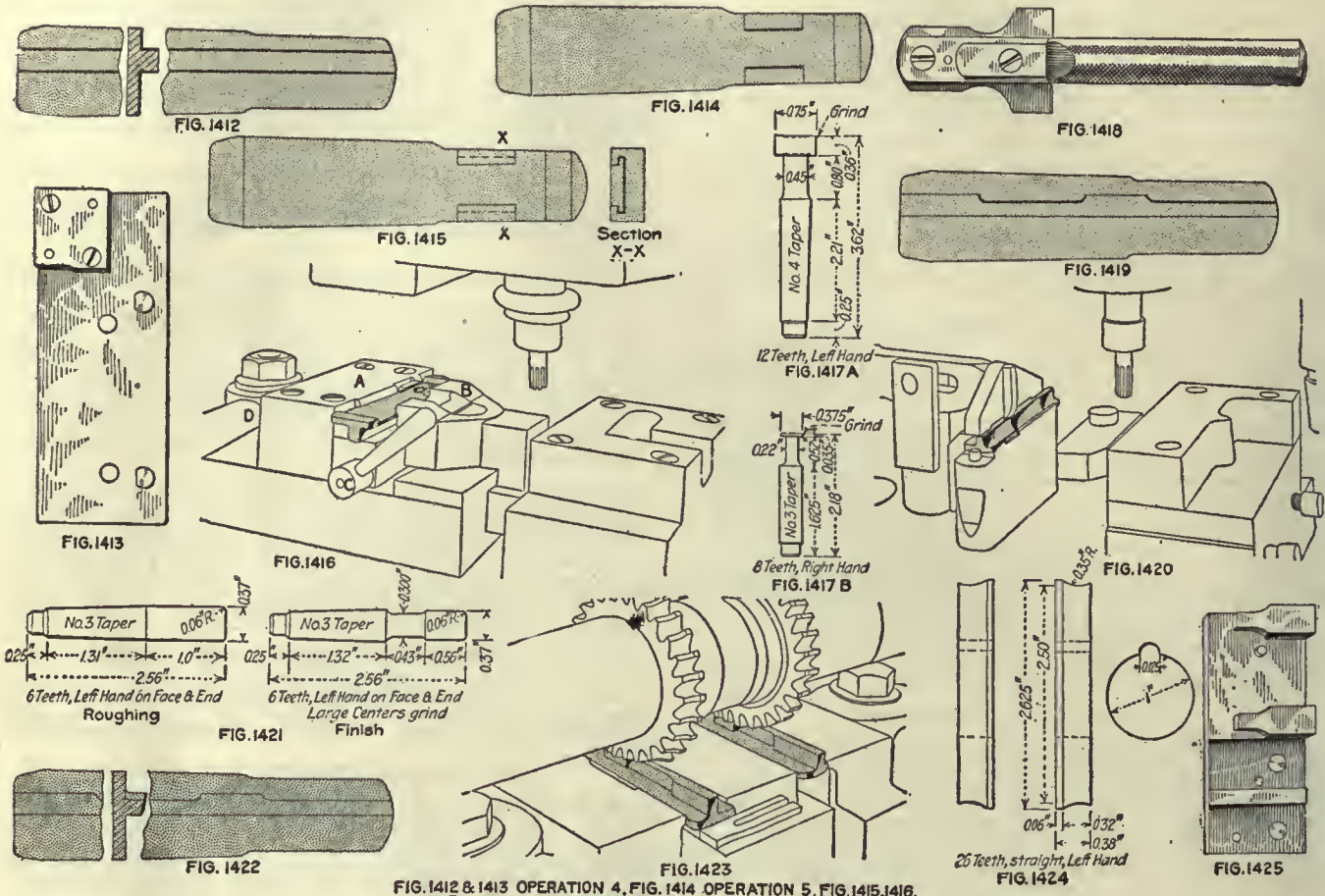

FIG. 1412 & 1413 OPERATION 4, FIG. 1414 OPERATION 5, FIG. 1415, 1416, 1417 & 1418 OPERATION 6, FIG. 1419, 1420 & 1421 OPERATION 7, FIG. 1422, 1423, 1424 & 1425 OPERATION 9

Movable Stud—Front Sight and Movable Base

These have to do with the sighting mechanism, both front and rear. The movable stud carries the front sight and allows it to be adjusted sideways. This movable stud carries the front sight, which is simply a sheet steel stamping as can be seen in Fig. 1450, this being afterward punched, pressed to shape, and then jig filed on the top and to general shape. It is finally spring tempered and left blue.

One of the interesting fixtures is shown in Fig. 1432. Here the pieces are located by the studs *B* and *C* in the swinging arm *A*. After the pieces are located against the stops, they are clamped by the jaws shown and the stop swung out of the way. Another fixture of interest is seen in Fig. 1442, where the movable stud *A* is forced into the holding jaws by the levers *B* and *C* and cam *D*. The movable base, seen in Fig. 1455, is rather a difficult piece.

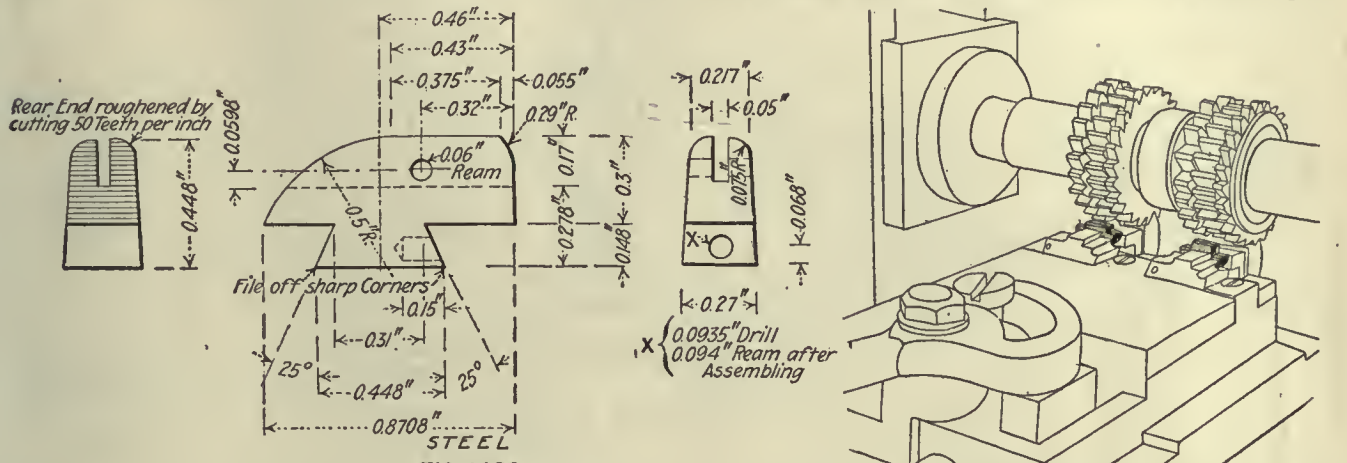

FIG. 1426

FIG. 1430

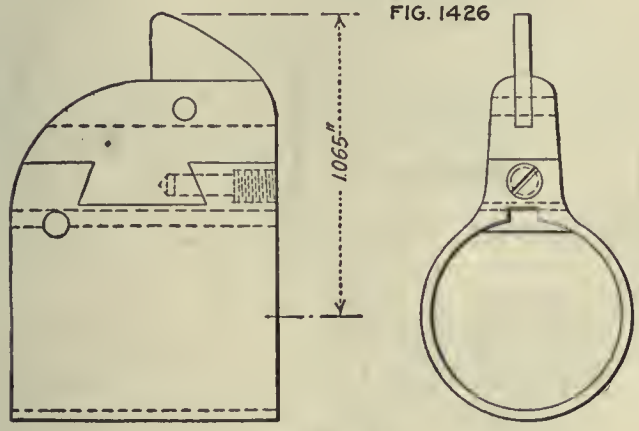

FIG. 1427

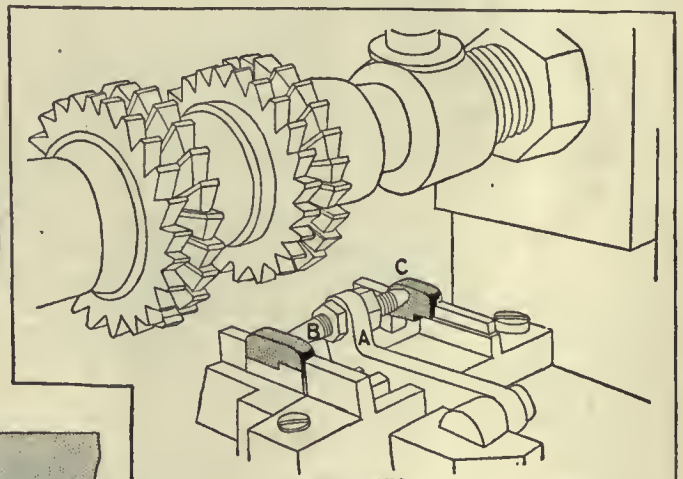

FIG. 1432

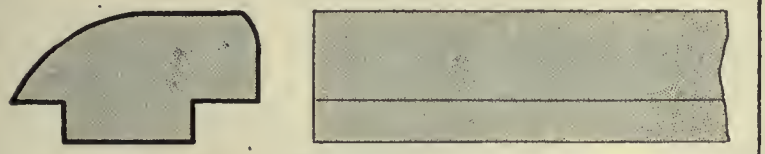

FIG. 1428
OPERATION A

FIG 1429
OPERATION 2

FIG. 1431

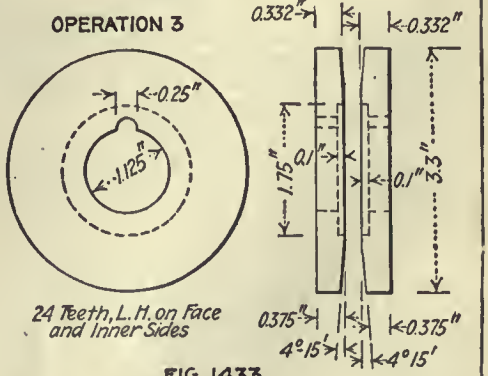

FIG. 1433

OPERATIONS ON THE MOVABLE STUD

Operations

A	Forging from bar
C	Annealing
D	Pickling
B	Trimming
2	Milling bottom crosswise
3	Straddle-milling both sides
4	Milling across top
4½	Burring for operation 4
5	Profiling dovetail
5½	Filing and cornering for operation 5
7	Drilling and reaming pin hole
8	Slotting for front sight
9	Milling serrations on rear face of stud
10	Filing to finish
11	Polishing
12	Bluing

Operation A. FORGING FROM BAR

Transformation—Fig. 1428. Number of Operators—One. Description of Operation—Shaping from bar. Apparatus and Equipment Used—400-lb. Billings & Spencer drop hammer. Production—200 per hr.

OPERATION 3. STRADDLE-MILLING BOTH SIDES

Transformation—Fig. 1431. Machine Used—Pratt & Whitney No. 2 Lincoln miller. Number of Machines per Operator—Four. Work-Holding Devices—Special vise jaws, Fig. 1432. Tool-Holding Devices—Standard arbor. Cutting Tools—Milling cutters, Fig. 1433. Number of Cuts—One. Cut Data—60 r.p.m.; ⅝-in. feed. Coolant—Cutting oil, dropped from tube. Average Life of Tool Between Grindings—5,000 pieces. Gages—Width. Production—60 per hr.

OPERATION 4. MILLING ACROSS TOP

Transformation—Fig. 1434. Machine Used—Pratt & Whitney Lincoln miller. Number of Machines per Operator—Four. Work-Holding Devices—Special fixture, Fig. 1435. Tool-Holding Devices—Standard arbor. Cutting Tools—Milling cutters, Fig. 1436. Number of Cuts—One. Cut Data—60 r.p.m.; ⅝-in. feed. Coolant—Cutting oil, put on with brush. Average Life of Tool Between Grindings—5,000 pieces. Gages—Form. Production—60 per hr.

OPERATION 4½. BURRING FOR OPERATION 4

Number of Operators—One. Description of Operation—Removing burrs left by cutters in operation 4. Apparatus and Equipment Used—File. Production—300 per hr.

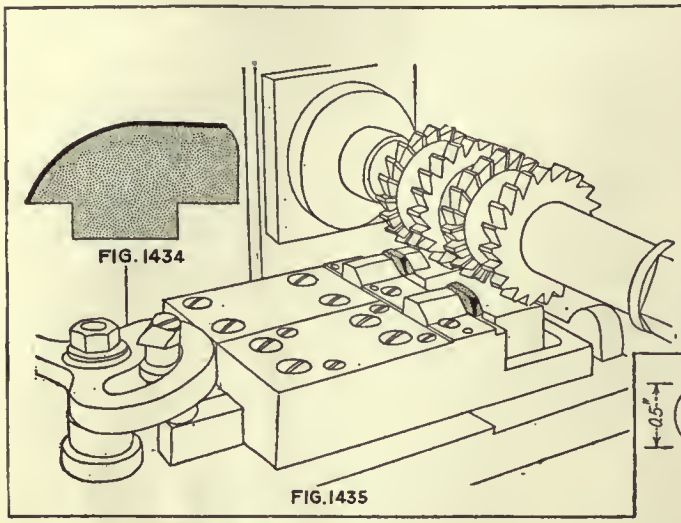

FIG. 1435

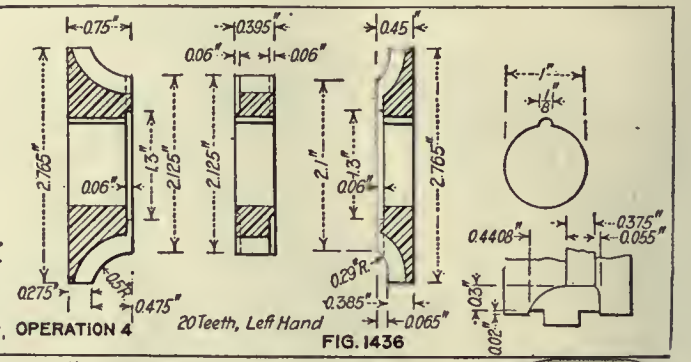

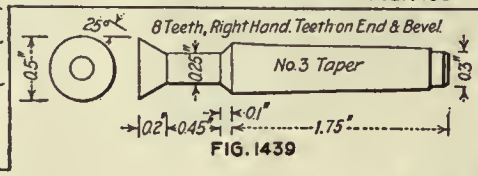

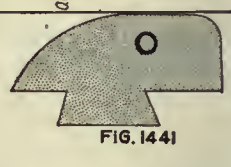

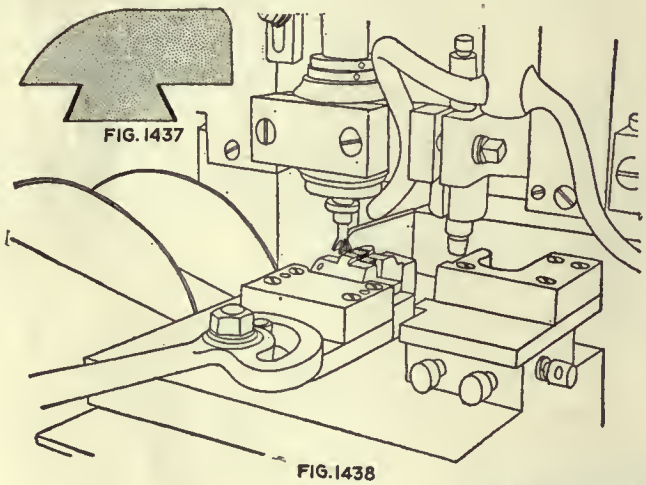

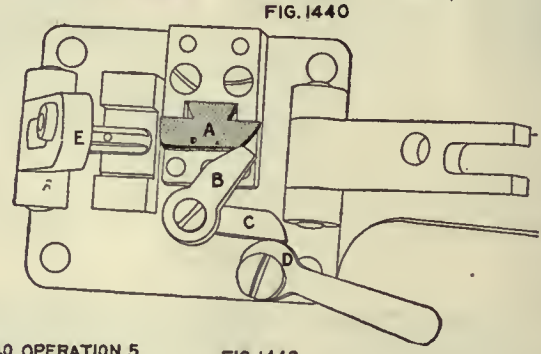

FIG. 1437, 1438, 1439 & 1440 OPERATION 5
FIG. 1441 & 1442 OPERATION 7

OPERATION C. ANNEALING

Description of Operation—Same as all annealing. Apparatus and Equipment Used—Same as all annealing.

OPERATION D. PICKLING

Description of Operation—Same as before. Apparatus and Equipment Used—Same as before.

OPERATION B. TRIMMING

Machine Used—Perkins 3-in. stroke press. Number of Operators per Machine—One. Punches and Punch Holders—Square-shank punch. Dies and Die Holders—Dies held by set-screw in shoe; shoe bolted to bed of press. Stripping Mechanism—Punched down through die. Production—700 per hr.

OPERATION 2. MILLING BOTTOM CROSSWISE

Transformation—Fig. 1429. Machine Used—Pratt & Whitney No. 2 Lincoln miller. Number of Machines per Operator—Four. Work-Holding Devices—Special vise jaws, Fig. 1430. Tool-Holding Devices—Standard arbor. Cutting Tools—Gang of milling cutters. Number of Cuts—One. Cut Data—60 r.p.m.; ⅝-in. feed per minute. Coolant—Cutting oil, put on with brush. Average Life of Tool Between Grindings—5,000 pieces. Gages—Length. Production—60 per hr.

OPERATION 5. PROFILING DOVETAIL

Transformation—Fig. 1437. Machine Used—Pratt & Whitney No. 1 profiler. Number of Operators per Machine—One. Work-Holding Devices—Special vise and jaws, Fig. 1438. Tool-Holding Devices—Taper shank. Cutting Tools—Profiling cutter, Fig. 1439. Number of Cuts—Two. Cut Data—1,200 r.p.m.; hand feed. Coolant—Cutting oil, ⅛-in. stream. Average Life of Tool Between Grindings—500 pieces. Gages—Fig. 1440. Production—35 per hr.

OPERATION 5½. FILING AND CORNERING

Number of Operators—One. Description of Operation—Filing edges and corners. Apparatus and Equipment Used—File. Production—200 per hr.

OPERATION 7. DRILLING AND REAMING PIN HOLE

Transformation—Fig. 1441. Machine Used—Pratt & Whitney three-spindle 16-in. vertical drilling machine. Number of Operators per Machine—One. Work-Holding Devices—Drill jig, Fig. 1442. Tool-Holding Devices—Drill chuck. Cutting Tools—Drills and half-round reamer. Number of Cuts—Three. Cut Data—750 r.p.m.; hand feed. Coolant—Cutting oil, ⅛ in. stream. Average Life of Tool Between Grindings—200. Gages—Plug. Production—60 per hr.

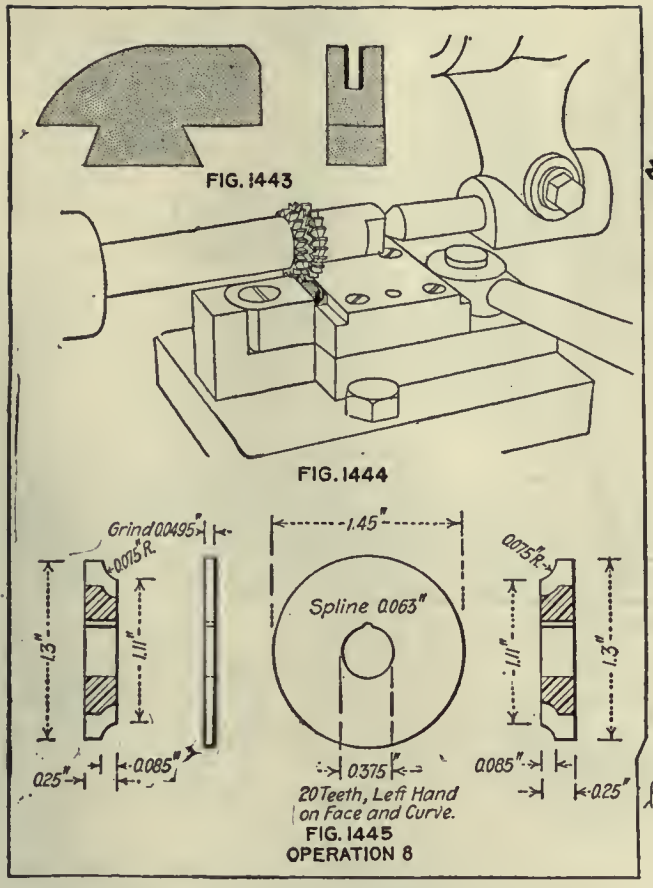

FIG. 1445
OPERATION 8

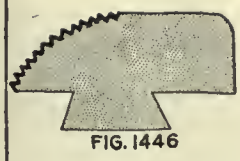

FIG. 1446

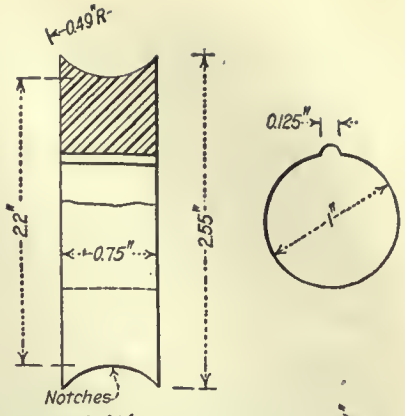

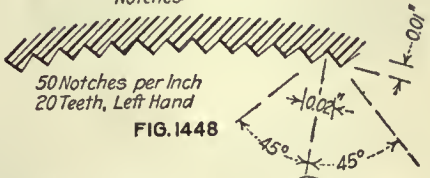

FIG. 1448

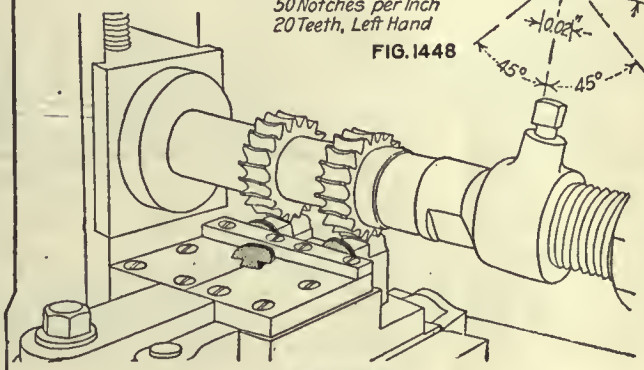

FIG. 1447
OPERATION 9

OPERATION 8. SLOTTING FOR FRONT SIGHT

Transformation—Fig. 1443. Machine Used—Whitney hand miller. Number of Operators per Machine—One. Work-Holding Devices—Special vise jaws, Fig. 1444. Tool-Holding Devices—Standard arbor. Cutting Tools—Slotting cutters, Fig. 1445. Number of Cuts—One. Cut Data—450 r.p.m.; hand feed. Coolant—Cutting oil, ⅛-in. stream. Average Life of Tool Between Grindings—5,000 pieces. Gages—Width of slot. Production—75 per hr.

OPERATION 9. MILLING SERRATIONS ON REAR FACE OF STUD

Transformation—Fig. 1446. Machine Used—Pratt & Whitney No. 2 Lincoln miller. Number of Machines per Operator—Four. Work-Holding Devices—Special vise jaws, Fig. 1447. Tool-Holding Devices—Standard arbor. Cutting Tools—Milling cutters, Fig. 1448. Number of Cuts—One. Cut Data—60 r.p.m.; ⅝-in. feed. Coolant—Cutting oil, put on with brush. Average Life of Tool Between Grindings—5,000 pieces. Gages—None. Production—60 per hr.

OPERATION 10. FILING TO FINISH

Number of Operators—One. Description of Operation—File off burrs from milling cutters. Apparatus and Equipment Used—File. Production—200 per hr.

OPERATION 11. POLISHING

Number of Operators—One. Description of Operation—Polish all over. Apparatus and Equipment Used—Polishing jack and wheel. Production—50 per hr.

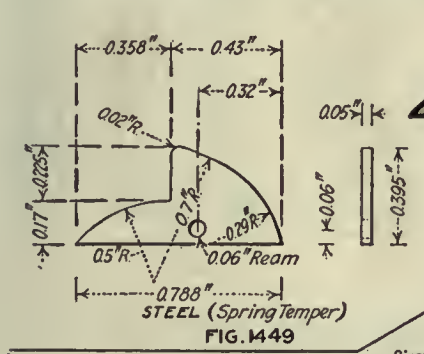

FIG. 1449

FIG. 1450
OPERATION 1

FIG. 1451
OPERATION 3

FIG. 1452

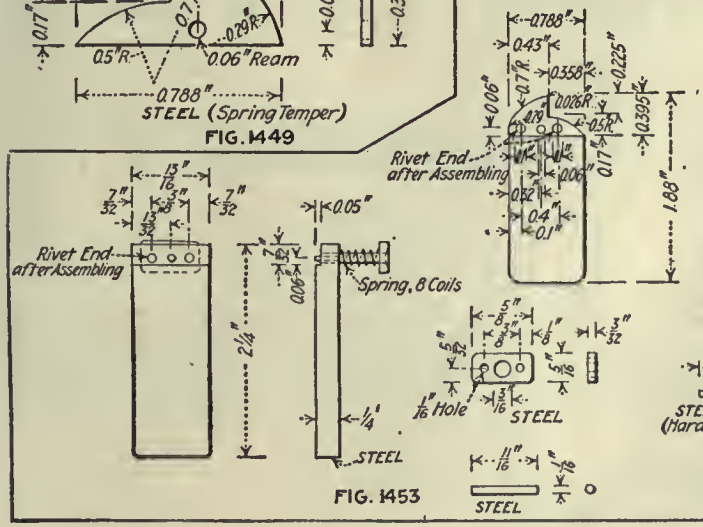

FIG. 1453

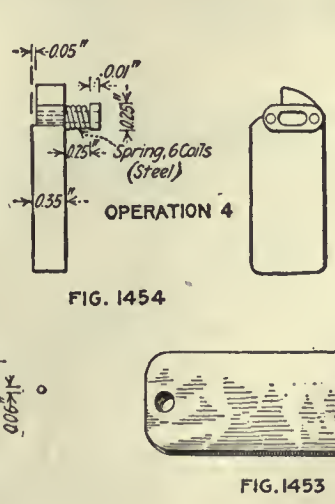

FIG. 1454

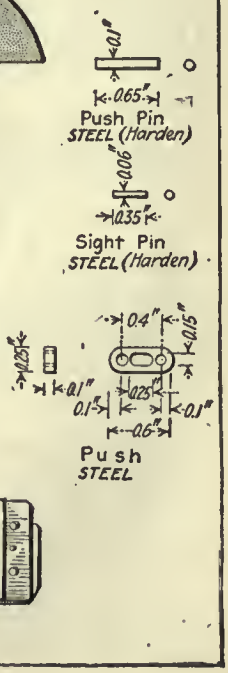

FIG. 1453

OPERATION 12. BLUING

Description of Operation—Same as previous bluing operations. Apparatus and Equipment Used—Same as before.

OPERATIONS ON THE FRONT SIGHT

Operations

1 Blanking from sheet cast steel
3 Punching pin hole
4 Pressing top and bottom to shape
5 Jig-filing top edges to finish height and shape
6 Jig-filing to finish thickness
7 Spring tempering

OPERATION 1. BLANKING FROM SHEET CAST STEEL

Transformation—Fig. 1450. Machine Used—Perkins punch press with roll feed. Number of Machines per Operator—Two. Punches and Punch Holders—Square-shank punch. Dies and Die Holders—Die held in shoe by setscrew. Stripping Mechanism—Steel stripper screwed to face of die. Lubricant—Stock in coils is oiled with cutting oil. Production—1,250 per hr.

OPERATION 3. PUNCHING PIN HOLE

Transformation—Fig. 1451. Machine Used—Perkins No. 19 press, 1½-in. stroke. Number of Machines per Operator—One. Punches and Punch Holders—Square-shank punch. Dies and Die Holders—Die held in shoe by setscrew. Stripping Mechanism—Steel stripper screwed to face of die. Gages—Pin. Production—600 per hr.

The Movable Base

OPERATIONS ON THE MOVABLE BASE

Operation

A Forging from bar
B Annealing
B-1 Pickling
C Trimming
D Cold dropping
1 Grinding bottom
2 Milling right edge and rear end
3 Milling left edge
AA Removing burrs left by operation 2
BB Removing burrs left by operation 3
4 Drilling joint and small hole for pivot
5 Reaming joint and drilling pivot hole, roughing
CC17½ Chambering pivot hole
6 Milling upper surface crosswise to finish
DD Removing burrs left by operation 6
7 Hand milling stud, roughing
9 Hand milling spring opening
10 Shaving spring opening
FF Removing burrs left by operation 10
10½ Straightening
GG Removing burrs from joint hole, reaming

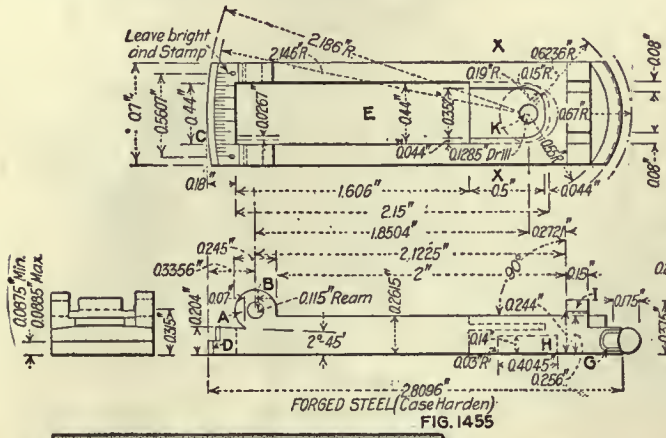

FIG. 1455

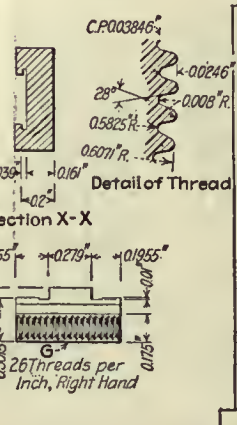

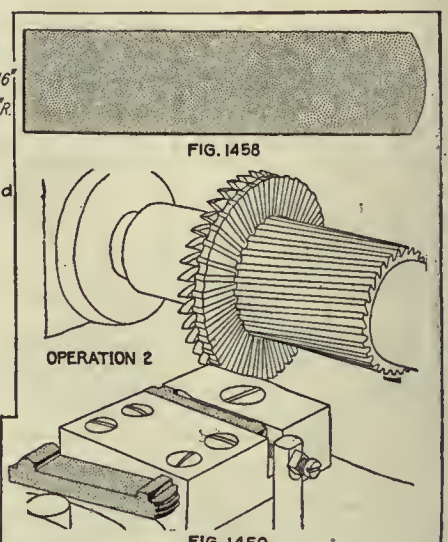

FIG. 1458

OPERATION 2

FIG. 1459

FIG. 1456
OPERATION A

FIG. 1457
OPERATION I

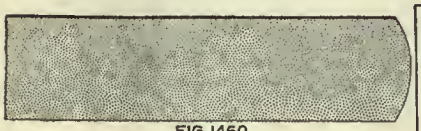

FIG. 1460
OPERATION 3

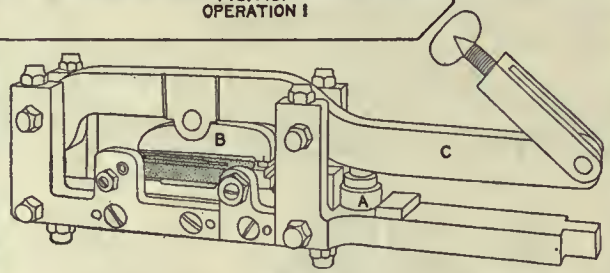

FIG. 1462

OPERATION 4

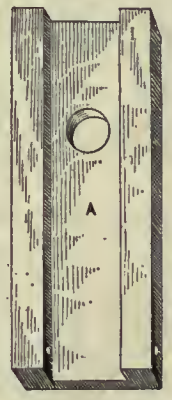

FIG. 1464

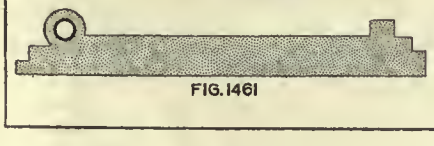

FIG. 1461

FIG. 1463

OPERATION 4. PRESSING TOP AND BOTTOM TO SHAPE

Transformation—Fig. 1452. Machine Used—Punch press, 1½-in. stroke. Number of Operators per Machine—One. Punches and Punch Holders—Square-shank punch and holder. Dies and Die Holders—Shoe bolted to bed of press; piece to be pressed is laid in die, which shapes the top of the sight. Stripping Mechanism—None. Gages—Form. Production—350 per hr.

OPERATION 5. JIG-FILING TOP EDGES TO FINISH HEIGHT AND SHAPE

Number of Operators—One. Description of Operation—Filing upper edges to match gage. Apparatus and Equipment Used—File. Gages—Fig. 1454. Production—80 per hr.

OPERATION 6. JIG-FILING TO THICKNESS

Number of Operators—One. Description of Operation—Filing to correct thickness. Apparatus and Equipment Used—Filing and jig for holding the work. Gages—Thickness. Production—175 per hr.

OPERATION 7. SPRING TEMPERING

Description of Operation—Heating and quenching in usual manner to secure the desired amount of temper. Apparatus and Equipment Used—Muffle furnaces, oil burning; quenching tanks.

12 Hand milling spring seat, roughing; drilling spring seat, roughing; profiling spring seat, upper cut
13 Profiling spring seat, under cut
15 Profiling joint and rear end, top and bottom roughing
14 Hand milling rear of joint
HH Removing burrs left by operation 14
16 Stamping graduations
17 Reaming joint and pivot hole to finish
23 Hand milling rear end to finish
24 Hand milling front end to finish
20 Milling stud to finish
22 Threading front end for windage screw
JJ Removing burrs left by operation 24
16½ Filing bottom and burring spring seat
15½ Filing rear of joint for graduations
25 Polishing sides
26 Filing top between ears to gage and general cornering
27 Spinning in machine
28 Cleaning graduation
29 Casehardening
30 Polishing graduation
31 Assembling with spring
32 Straightening
33 Assembling with slide

FIG. 1465

FIG. 1466

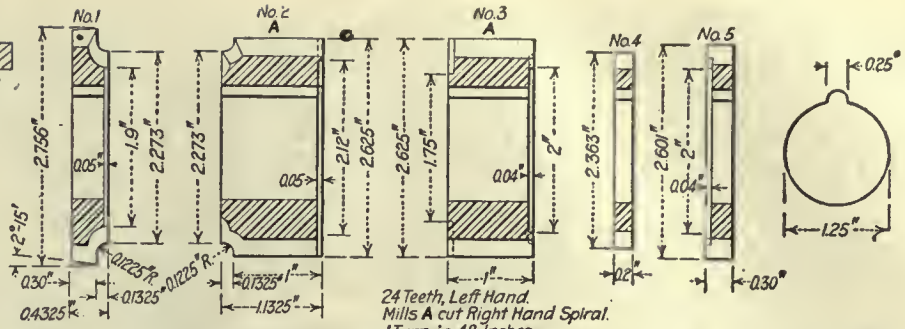

24 Teeth, Left Hand.
Mills A cut Right Hand Spiral.
1 Turn in 48 Inches.

FIG. 1469

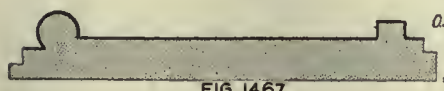

FIG. 1467

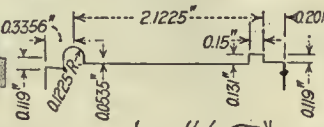

FIG. 1470

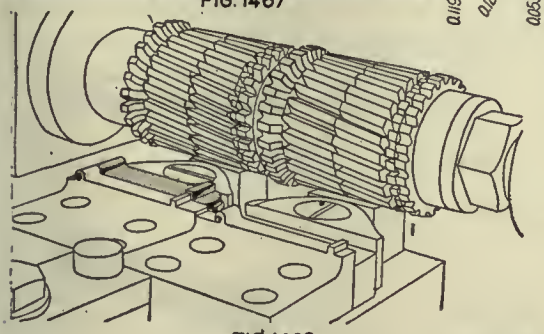

FIG. 1468

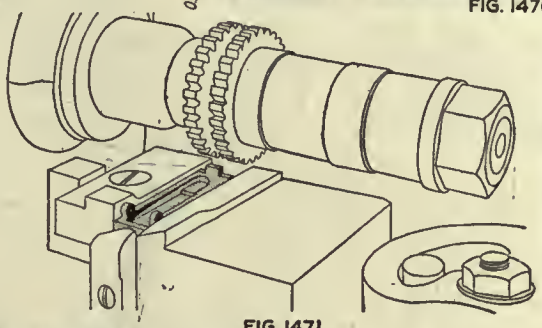

FIG. 1471

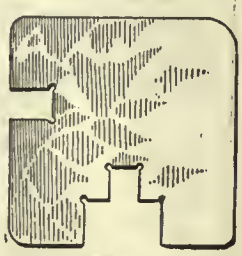

FIG. 1472

FIG. 1465 & 1466 OPERATION 17½, FIG. 1467, 1468 & 1469 OPERATION 6, FIG. 1470, 1471 & 1472 OPERATION 7

FIG. 1473

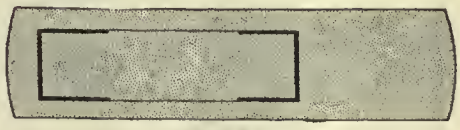

FIG. 1475

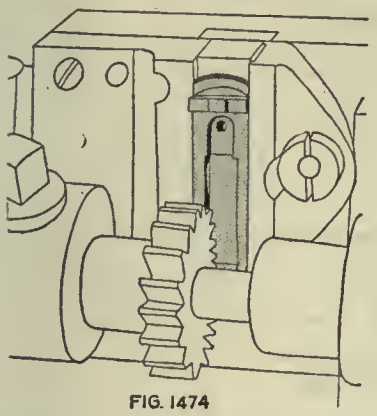

FIG. 1474

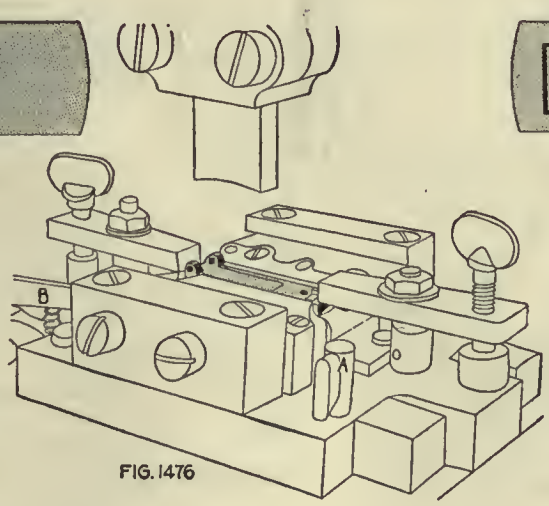

FIG. 1476

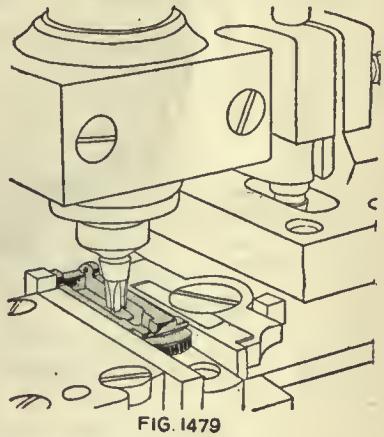

FIG. 1479

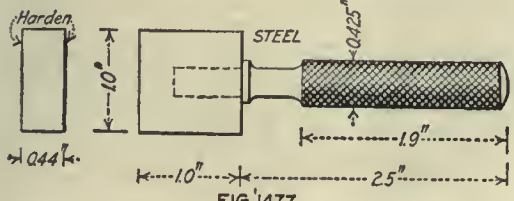

FIG. 1477

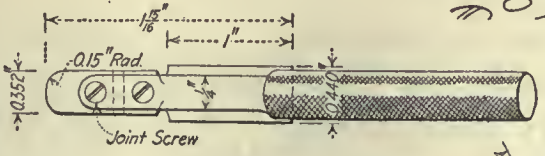

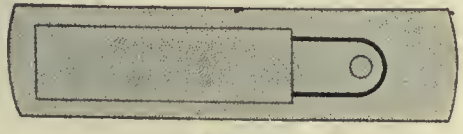

FIG. 1478

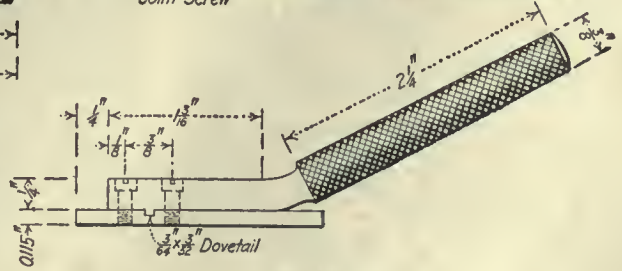

FIG. 1481

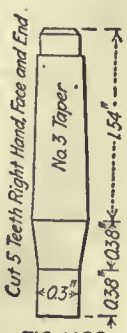

FIG. 1480

FIG. 1473 AND 1474 OPERATION 9, FIG. 1475, 1476 & 1477 OPERATION 10, FIG. 1478, 1479, 1480 & 1481 OPERATION 12

OPERATION A. FORGING FROM BAR

Transformation—Fig. 1456. Number of Operators—One. Description of Operation—Shaping from bar. Apparatus and Equipment Used—Billings & Spencer 600-lb. drop hammer. Production—125 pieces per hr.

OPERATION B. ANNEALING

Number of Operators—One. Description of Operation—Placed in iron pots packed with powdered charcoal, heated to 850 deg. C. (1,562 deg. F.), left over night to cool. Apparatus and Equipment Used—Brown & Sharpe annealing furnace, oil burner, powdered charcoal.

OPERATION B-1. PICKLING

Number of Operators—One. Description of Operation—Placed in wire baskets and then in the pickling solution, which consists of 1 part sulphuric acid to 9 parts water; left in this from 10 to 12 min. Apparatus and Equipment Used—Wire baskets, wooden pickling tanks and hand hoist.

OPERATION C. TRIMMING

Machine Used—Perkins No. 19 press. Number of Operators per Machine—One. Punches and Punch Holders—Square shank. Dies and Die Holders—Setscrew. Stripping Mechanism—Pushed through die. Average Life of Punches—15,000 pieces. Production—450 pieces per hr.

OPERATION D. COLD DROPPING

Number of Operators—One. Description of Operation—Straightening after trimming. Apparatus and Equipment Used—Billings & Spencer 400-lb. drop hammer. Production—600 pieces per hr.

OPERATION 1. GRINDING BOTTOM

Transformation—Fig. 1457. Machine Used—Pratt & Whitney vertical grinder. Number of Operators per Machine—One. Work-Holding Devices—Held on a 30-in. magnetic chuck, between strips of steel. Tool-Holding Devices—Vertical spindle. Cutting Tools—14-in. wheel. Cut Data—1,500 r.p.m.; 15-in. feed. Coolant—Water. Gages—None. Production—250 pieces per hr.

OPERATION 2. MILLING RIGHT EDGE AND REAR END

Transformation—Fig. 1458. Machine Used—Pratt & Whitney No. 2 Lincoln miller. Number of Machines per Operator—Five. Work-Holding Devices—Clamped by special vise jaws, Fig. 1459. Tool-Holding Devices—Standard arbor. Cutting Tools—Milling cutter. Number of Cuts—One. Cut Data—60 r.p.m.; ⅝-in. feed. Coolant—Cutting oil, put on with brush. Average Life of Tool Between Grindings—5,000 pieces. Gages—None. Production—40 pieces per hr. per machine.

OPERATIONS AA AND BB. REMOVING BURRS LEFT BY OPERATIONS 2 AND 3

Number of Operators—One. Description of Operation—Removing burrs thrown up by operations 2 and 3. Apparatus and Equipment Used—File. Production—Grouped with operations 2 and 3.

OPERATION 3. MILLING LEFT EDGE

Transformation—Fig. 1460. Machine Used—Pratt & Whitney No. 2 Lincoln miller. Number of Machines per Operator—Five. Work-Holding Devices—Same as Fig. 1459, except reversed. Tool-Holding Devices—Standard arbor. Cutting Tools—Slab milling cutter. Number of Cuts—One. Cut Data—60 r.p.m.; ⅝-in. feed. Coolant—Cutting oil, put on with brush. Average Life of Tool Between Grindings—5,000 pieces. Gages—Width. Production—40 pieces per hr. per machine.

OPERATIONS CC AND 17½. CHAMBERING PIVOT HOLE FOR PIVOT

Transformation—Fig. 1461. Machine Used—Sigourney Tool Co. Number of Operators per Machine—One. Work-Holding Devices—Drill jig, Fig. 1462; work is forced to place by the cam A and held down by the floating lever B, while the arm C is locked by the swing link. Tool-Holding Devices—Drill chuck. Cutting Tools—Twist drills. Number of Cuts—Two. Cut Data—750 r.p.m.; hand feed. Coolant—Cutting oil, ⅛-in. stream. Average Life of Tool Between Grindings—200 pieces. Gages—See Fig. 1464. Production—60 pieces per hr.

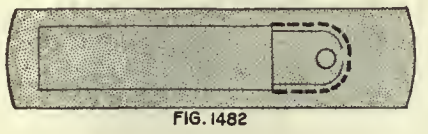

FIG. 1482

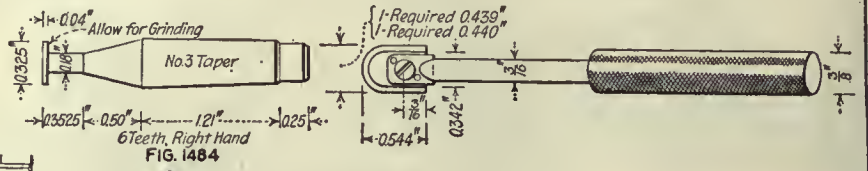

FIG. 1484

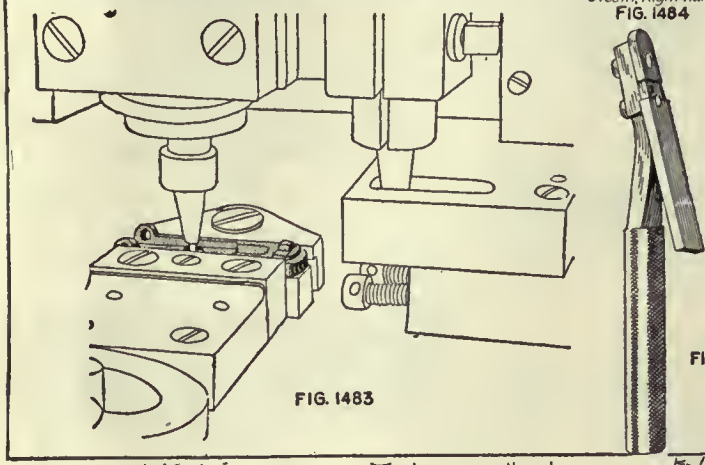

FIG. 1483

FIG. 1485

OPERATION 13

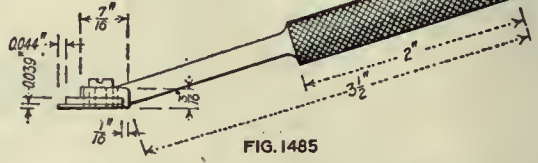

FIG. 1485

FIG. 1486

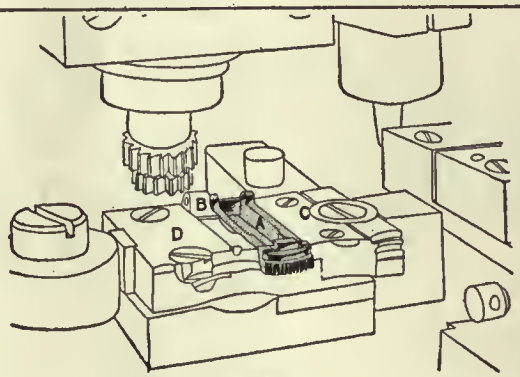

FIG. 1487

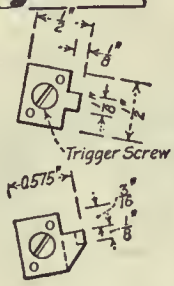

OPERATION 15

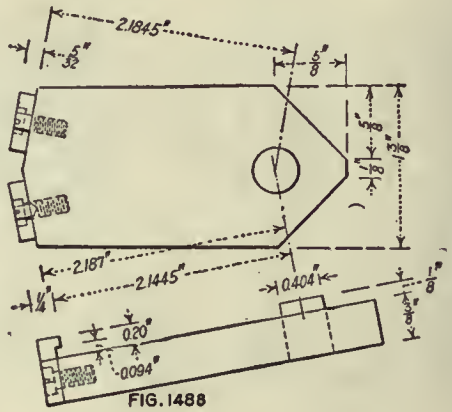

FIG. 1488

OPERATION 5. REAMING JOINT AND DRILLING PIVOT HOLE, ROUGHING

Transformation—Fig. 1463. Machine Used—Pratt & Whitney No. 2 four-spindle upright drill. Number of Operators per Machine—One. Work-Holding Devices—Drill jig, same as Fig. 1462. Tool-Holding Devices—Drill chuck. Cutting Tools—Reamer; also, square-pointed drill for pivot hole. Number of Cuts—Two. Cut Data—Reamer, 650 r.p.m.; bottoming drill, 450 r.p.m. Coolant—Cutting oil, ⅛-in. stream. Average Life of Tool Between Grindings—300 pieces. Gages—Fig. 1464; A, location and diameter of holes; B, depth. Production—60 pieces per hr.

OPERATIONS CC AND 17½. CHAMBERING PIVOT HOLE

Transformation—Fig. 1465. Number of Operators—One. Description of Operation—Rounding corner and burring pivot hole. Apparatus and Equipment Used—Bench lathe and chamfering tool, Fig. 1466. Production—500 pieces per hr.

OPERATION 6. MILLING UPPER SURFACE CROSSWISE TO FINISH

Transformation—Fig. 1467. Machine Used—Pratt & Whitney No. 2 Lincoln miller. Number of Machines per Operator—Five. Work-Holding Devices—Held on pin, clamped with vise, Fig. 1468. Tool-Holding Devices—Standard arbor. Cutting Tools—Milling cutters, Fig. 1469. Number of Cuts—One. Cut Data—60 r.p.m.; ⅝-in. feed. Coolant—Cutting oil.

put on with brush. Average Life of Tool Between Grindings—5,000 pieces. Gages—Form, outline gaged from pin hole in ear; location of all holes. Production—40 pieces per hr.

OPERATION DD. REMOVING BURRS LEFT BY OPERATION 6

Number of Operators—One. Description of Operation—Removing burrs thrown up by operation 6. Apparatus and Equipment Used—File. Production—500 pieces per hr.

OPERATION 7. HAND MILLING STUD, ROUGHING

Transformation—Fig. 1470. Machine Used—Pratt & Whitney No. 2 hand miller. Number of Operators per Machine—One. Work-Holding Devices—Pushed to stop, clamped with vise jaws, Fig. 1471. Tool-Holding Devices—Standard arbor. Cutting Tools—Milling cutters. Number of Cuts—One. Cut Data—450 r.p.m.; hand feed. Coolant—Cutting oil, put on with brush. Average Life of Tool Between Grindings—5,000 pieces. Gages—Fig. 1472, form. Production—115 pieces per hr.

OPERATION 9. HAND MILLING SPRING OPENING

Transformation—Fig. 1473. Machine Used—Garvin No. 3 hand miller. Number of Operators per Machine—One. Work-Holding Devices—Held vertically by vise jaws, Fig. 1474. Tool-Holding Devices—Standard arbor. Cutting Tools—Two ½x½-in. milling cutters. Number of Cuts—One. Cut Data—350 r.p.m.; hand feed. Coolant—Compound, ¼-in. stream. Average Life of Tool Between Grindings—5,000 pieces. Gage—Thickness of side wall. Production—120 pieces per hr.

OPERATION 10. SHAVING SPRING OPENING

Transformation—Fig. 1475. Machine Used—Snow-Brooks No. 2. Number of Operators per Machine—One. Work-Holding Devices—Held on fixture by finger clamps at each end, Fig. 1476; removed by knock-out levers A and B. Tool-Holding Devices—Held in clapper box of press. Cutting Tools—Shaving tool. Cut Data—80 strokes per minute. Coolant—Cutting oil, put on with brush. Average Life of Tool Between Grindings—500 pieces. Gages—Fig. 1477, size of opening, thickness of wall and distance from pivot hole to spring slot. Production—80 pieces per hr.

OPERATION FF. REMOVING BURRS LEFT BY OPERATION 10

Number of Operators—One. Description of Operation—Removing burrs thrown up by operation 10. Apparatus and Equipment Used—File. Production—400 pieces per hr.

OPERATION 10½. STRAIGHTENING

Number of Operators—One. Description of Operation—Straightening. Apparatus and Equipment Used—Lead block, straight-edge and hammer. Production—175 pieces per hr.

OPERATION GG. REMOVING BURRS FROM JOINT HOLE, REAMING

Number of Operators—One. Description of Operation—Removing burrs thrown around hole. Apparatus and Equipment Used—Hand reamer. Production—500 pieces per hr.

OPERATION 12. HAND MILLING SPRING SEAT, ROUGHING; DRILLING SPRING SEAT, ROUGHING; PROFILING SPRING SEAT, UPPER CUT

Transformation—Fig. 1478. Machine Used—Pratt & Whitney No. 1 profiler. Number of Operators per Machine—One. Work-Holding Devices—Centered on side pin, clamped by vise jaws, Fig. 1479. Tool-Holding Devices—Taper shank. Cutting Tools—Milling cutter, Fig. 1480. Number of Cuts—Two. Cut Data—1,200 r.p.m.; hand feed. Coolant—Compound, ¼-in. stream. Average Life of Tool Between Grindings—300 pieces. Gages—Fig. 1481; thickness of spring seat; length and width of spring seat; side location of spring seat with side of spring opening. Production—50 pieces per hr.

OPERATION 13. PROFILING SPRING SEAT, UNDER CUT

Transformation—Fig. 1482. Machine Used—Pratt & Whitney No. 1 profiler. Number of Operators per Machine—One. Work-Holding Devices—Centered on side pin clamped by vise jaws, Fig. 1483. Tool-Holding Devices—Taper shank. Cutting Tools—Under-cut milling cutter, Fig. 1484. Number of Cuts—One. Cut Data—1,200 r.p.m.; hand feed. Coolant—Cutting oil, 1/16-in. stream. Average Life of Tool Between Grindings—200 pieces. Gages—Fig. 1485; thickness of spring seat; thickness and width of undercut; side location of undercut. Production—60 pieces per hr.

OPERATION 15. PROFILING JOINT AND REAR END, TOP AND BOTTOM ROUGHING

Transformation—Fig. 1486. Machine Used—Pratt & Whitney No. 2 profiler. Number of Operators per Machine—One. Work-Holding Devices—Held by vise jaws, Fig. 1487. Tool-Holding Devices—Taper shank. Cutting Tools—Milling cutter. Number of Cuts—Two. Cut Data—1,200 r.p.m.; hand feed. Coolant—Cutting oil, ¼-in. stream. Average Life of Tool Between Grindings—500 pieces. Gages—Fig. 1488; two thicknesses of end; front end from pivot; rear end from pivot; groove for hobbing; finishing for same. Production—80 pieces per hr

OPERATION 17. REAMING JOINT AND PIVOT HOLE TO FINISH

Machine Used—Sigourney Tool Co. 3-spindle 16-in. upright drilling machine. Number of Operators per Machine—One. Work-Holding Devices—Drill jig, same as Fig. 1462. Tool-Holding Devices—Drill chuck. Cutting Tools—Reamers, for pivot hole and for joint holes. Number of Cuts—Two. Cut Data—750 r.p.m.; hand feed. Coolant—Cutting oil, ⅛-in. stream. Average Life of Tool Between Grindings—500 pieces. Gages—Depth of pivot hole. Production—90 pieces per hr.

OPERATION 23. HAND MILLING REAR END TO FINISH

Transformation—Fig. 1496. Machine Used—Whitney hand miller. Number of Operators per Machine—One. Work-Holding Devices—Rotating fixture, Fig. 1499. Tool-Holding Devices—Taper shank. Cutting Tools—Milling cutter. Number of Cuts—One. Cut Data—650 r.p.m.; hand feed. Coolant—Cutting oil, put on with brush. Average Life of Tool Between Grindings—1500 pieces. Gages—Fig. 1497, profile gage. Production—300 pieces per hr.

OPERATION 24. HAND MILLING FRONT END TO FINISH

Transformation—Fig. 1498. Machine Used—Whitney hand miller. Number of Operators per Machine—One. Work-Holding Devices—Rotating fixture, Fig. 1499; lever forced against work by screws. Tool-Holding Devices—Taper shank. Cutting Tools—Pair of milling cutters, Fig. 1500. Number of Cuts—One. Cut Data—650 r.p.m.; hand feed. Coolant—Cutting oil, ⅛-in. stream. Average Life of Tool Between Grindings—1500 pieces. Gages—Fig. 1501; location of shoulder; radius; thickness of tongue. Production—300 pieces per hr.

OPERATION 20. MILLING STUD TO FINISH

Transformation—Fig. 1502. Machine Used—Standard No. 4½ universal. Number of Operators per Machine—One. Work-Holding Devices—Located by stop at end, clamped by vise jaws, double fixture, Fig. 1503. Tool-Holding Devices—Standard arbor. Cutting Tools—Facing and slotting cutters, Fig. 1504. Number of Cuts—One. Cut Data—350 r.p.m.; ⅜-in. feed.

FIG. 1489

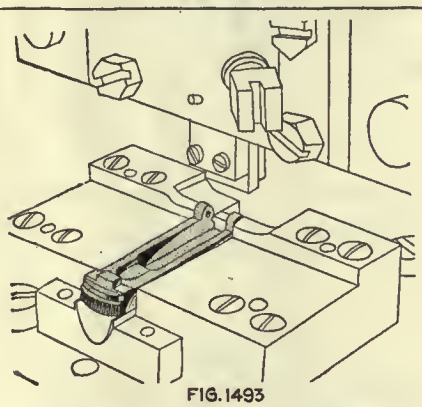

FIG. 1493

OPERATION 14

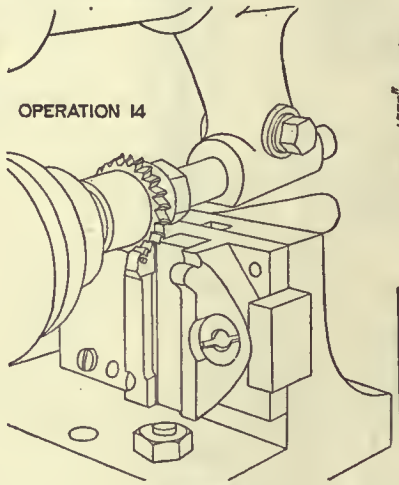

FIG. 1490

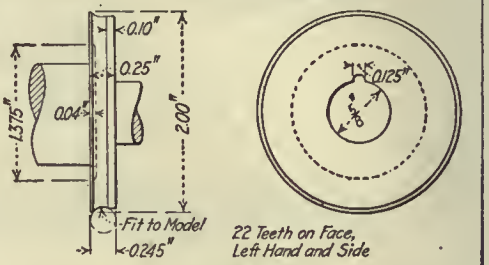

FIG. 1491

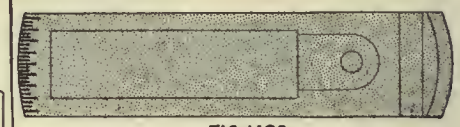

FIG. 1492

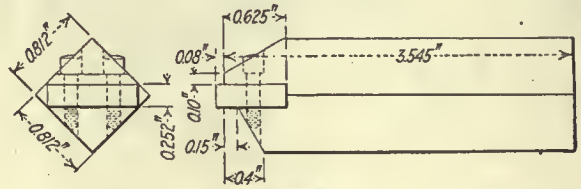

FIG. 1494

OPERATION 16

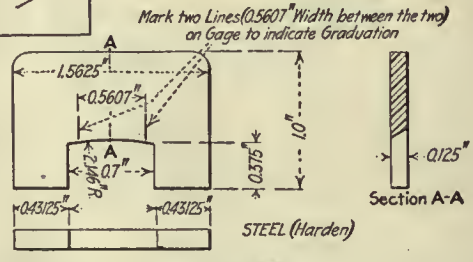

FIG. 1495

OPERATION 14. HAND MILLING REAR OF JOINT

Transformation—Fig. 1489. Machine Used—Whitney hand miller. Number of Operators per Machine—One. Work-Holding Devices—Held on pin, clamped by vise jaws, Fig. 1490. Tool-Holding Devices—Standard arbor. Cutting Tools—Formed cutter, Fig. 1491. Number of Cuts—One. Cut Data—650 r.p.m.; hand feed. Coolant—Cutting oil, put on with brush. Average Life of Tool Between Grindings—5,000 pieces. Gages—Height of under cut from bottom; work goes over block and is gaged by straight-edge across top. Production—175 pieces per hr.

OPERATION HH. REMOVING BURRS LEFT BY OPERATION 14

Number of Operators—One. Description of Operation—Removing burrs thrown up by operation 14. Apparatus and Equipment Used—File. Production—600 pieces per hr.

OPERATION 16. STAMPING GRADUATIONS

Transformation—Fig. 1492. Machine Used—Snow-Brooks No. 0. Number of Operators per Machine—One. Punches and Punch Holders—Square-shank punch, Fig. 1493; punch details in Fig. 1494. Dies and Die Holders—Bolted to bed of press. Gages—Fig. 1495. Production—500 pieces per hr. Note—Fixture screwed to bed of press.

Coolant—Cutting oil, put on with brush. Average Life of Tool Between Grindings—1500 pieces. Gages—Fig. 1505, location of stud at A; width of stud at B and C, limit gages. Production—175 pieces per hr.

OPERATION 22. THREADING FRONT END FOR WINDAGE SCREW

Transformation—Fig. 1506. Machine Used—Special hobbing machine built at shops. Number of Operators per Machine—One. Work-Holding Devices—Clamped by strap A, Figs. 1507 and 1508, to rotating table. Tool-Holding Devices—Taper driver H and female center I, Figs. 1508 and 1509. Cutting Tools—Special hob, Fig. 1509. Number of Cuts—One. Cut Data—70 r.p.m. Coolant—Cutting oil, put on with brush. Special Fixtures—Hobbing machine; hob is driven by pulley C; worm D on same shaft drive gears E F G, which rotate work at proper speed for hobbing; these gears are kept in mesh by spring during feed movement of work; feed lever J gives predetermined feeds for each cut. Production—90 per hr.

OPERATION JJ. REMOVING BURRS LEFT BY OPERATION 24

Number of Operators—One. Description of Operation—Removing burrs thrown up by operation 24. Apparatus and Equipment Used—File. Production—500 pieces per hr.

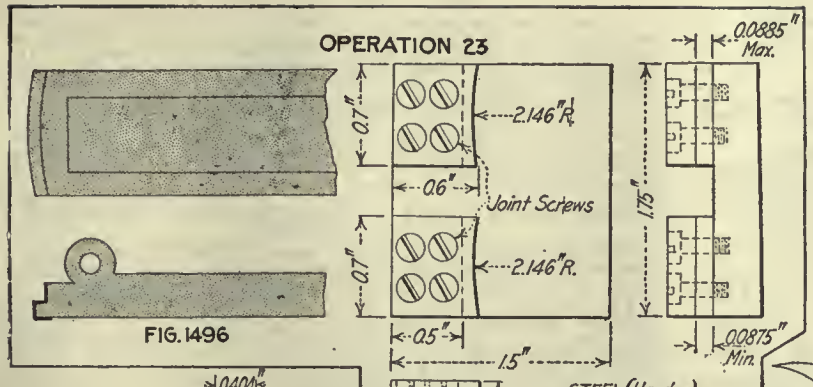

FIG. 1496

FIG. 1498

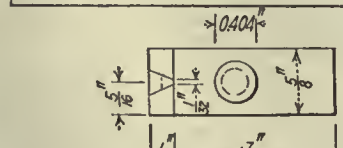

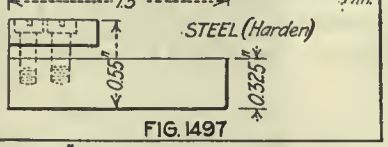

FIG. 1497

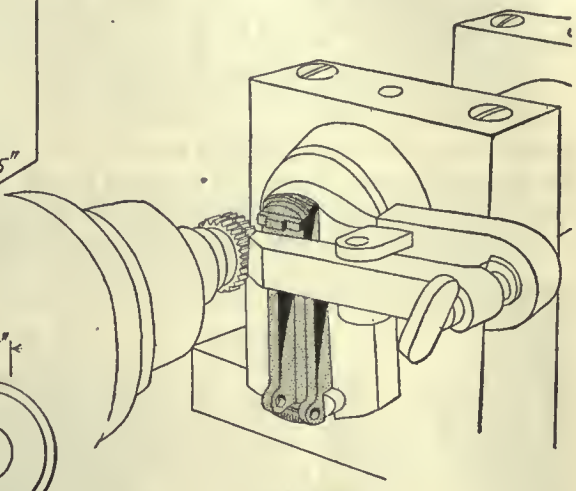

FIG. 1499

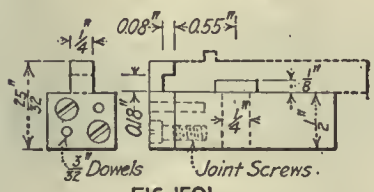

FIG. 1501

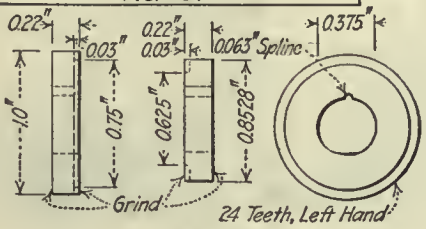

FIG. 1500

OPERATION 24

OPERATION 15½. FILING REAR OF JOINT FOR GRADUATIONS

Number of Operators—One. Description of Operation—Filing joint at rear for graduations. Apparatus and Equipment Used—File. Production—375 pieces per hr.

OPERATION 16½. FILING BOTTOM AND BURRING SPRING SEAT

Number of Operators—One. Description of Operation—Filing bottom and burring. Apparatus and Equipment Used—File. Production—125 pieces per hr.

OPERATION 25. POLISHING SIDES

Number of Operators—One. Description of Operation—Polishing sides. Apparatus and Equipment Used—Polishing jack and wheel. Production—400 pieces per hr.

OPERATION 26. FILING TOP BETWEEN EARS TO GAGE AND GENERAL CORNERING

Number of Operators—One. Description of Operation—Cornering and filing to gage between ears. Apparatus and Equipment Used—File and gage. Gages—For spring opening in base and thickness of side wall. Production—15 pieces per hr.

OPERATION 27. SPINNING IN MACHINE

Machine Used—Machine built in shop, Fig. 1510. Number of Operators per Machine—One. Work-Holding Devices—Pivoted in fixture by stud of fixed base forms holder. Tool-Holding Devices—In spindle, by setscrew. Cutting Tools—None; the teeth are smoothed out by a hardened worm. Number of Cuts—None. Cut Data—1,200 r.p.m.; hand feed. Production—350 pieces per hr. Note—Spindle A of machine drives a hardened worm B, which is a counterpart of the windage screw; movable base pivots on C; as the base is turned by worm, it strikes one of the springs D or E and throws a clutch that reverses the spindle and the direction of rotation of the worm.

OPERATION 28. CLEANING GRADUATIONS

Number of Operators—One. Description of Operation—Cleaning graduations. Apparatus and Equipment Used—Hand brush. Production—175 pieces per hr.

OPERATION 29. CASEHARDENING

Number of Operators—One. Description of Operation—Pack in bone ¾, leather ¼; heat to 750 deg. C. (1,382 deg. F.) for 2½ hr.; quench in oil. Apparatus and Equipment Used—Same as other casehardening equipment.

OPERATION 30. POLISHING GRADUATIONS

Number of Operators—One. Description of Operation—Polishing graduations. Apparatus and Equipment Used—Polishing jack and wheel. Production—375 pieces per hr.

FIG. 1502

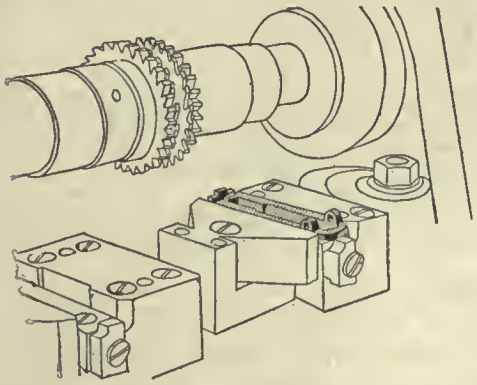

FIG. 1503

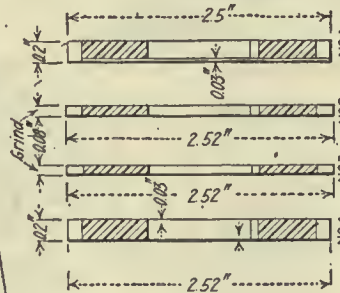

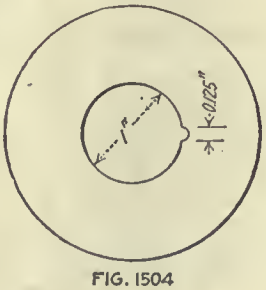

FIG. 1504

OPERATION 20

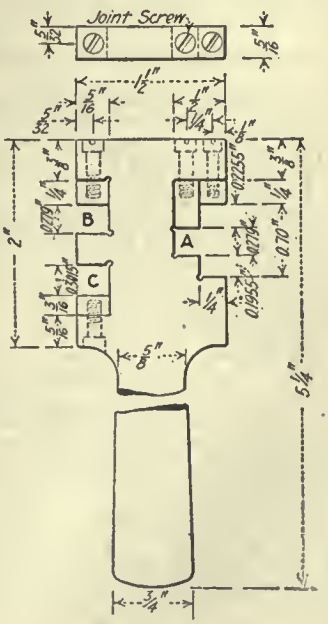

FIG. 1505

OPERATION 31. ASSEMBLING WITH SPRING

Number of Operators—One. Description of Operation—Assembling spring. Apparatus and Equipment Used—Hand and pliers. Production—175 pieces per hr.

OPERATION 32. STRAIGHTENING

Number of Operators—One. Description of Operation—Straightening. Apparatus and Equipment Used—Lead block, hammer and straight-edge. Production—95 pieces per hr.

OPERATION 33. ASSEMBLING WITH SLIDE

Number of Operators—One. Description of Operation—Assembling with slide. Apparatus and Equipment Used—Hands. Production—35 pieces per hr.

The Base Spring

This is a short, stiff spring, which holds the sight leaf in either its horizontal or vertical position. It is blanked out from sheet steel, slides into a groove in the movable base and has a hole in the base end. The spring being of the cantilever type is supported at one end only.

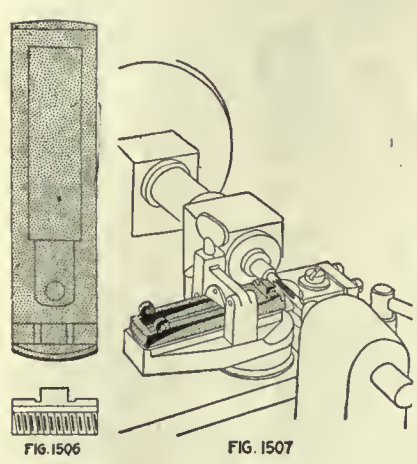

FIG. 1506

FIG. 1507

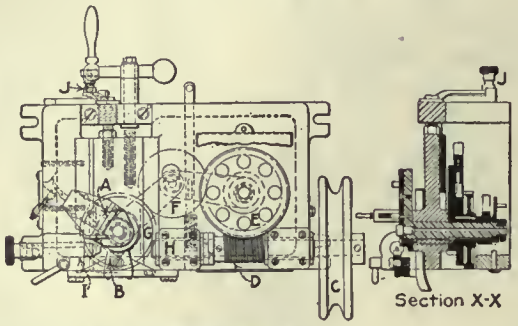

FIG. 1508

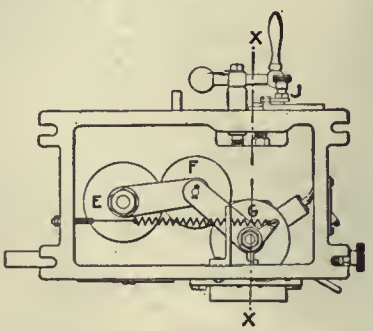

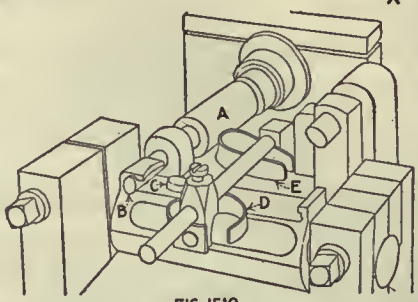

FIG. 1510

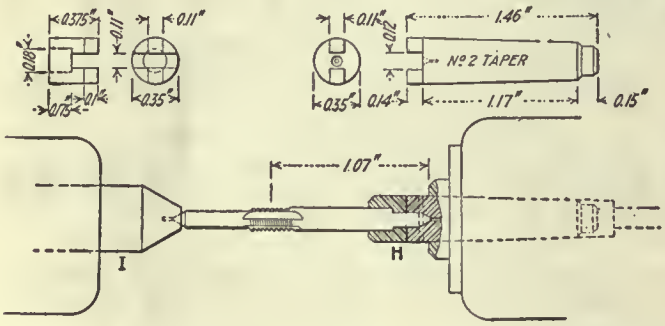

FIG. 1509
OPERATION 22

OPERATIONS ON THE BASE SPRING

Operation	
A	Blanking out spring from sheet cast steel
A–1	Punching dismounting hole
6	Grinding
DD	Reaming assembling hole
4	Milling left edge and front end
5	Milling right edge and front end
7	Milling top and rear end
AA	Reaming burrs on end left by operation 7
BB	Removing burrs on edge left by operation 7
EE	Removing burrs from assembling hole
8	Profiling front end
CC	Removing burrs left by operation 8
C–1	Polishing free end and burring fixed end
9	Bending
10	Tempering and hardening
11	Setting

OPERATION A. BLANKING OUT SPRING FROM SHEET CAST STEEL

Transformation—Fig. 1512. Machine Used—Perkins No. 19 press. Number of Operators per Machine—One. Punches and Punch Holders—Round shank. Dies and Die Holders—Held in shoe by setscrew, compound die. Stripping Mechanism—Steel stripper, screwed to face of die. Average Life of Punches and Dies—25,000 pieces. Lubricant—Stock oil and cutting oil. Production—3,500 pieces per hr.

OPERATION A-1. PUNCHING DISMOUNTING HOLES

Transformation—Fig. 1513. Machine Used—Stiles No. 1 press. Number of Operators per Machine—One. Punches and Punch Holders—Square shank. Dies and Die Holders—Held in shoe by setscrew. Stripping Mechanism—Stripper screwed to face of die. Average Life of Punches and Dies—5,000 pieces. Lubricant—Oil, put on with brush. Production—900 pieces per hr.

OPERATION 6. GRINDING

Transformation—Fig. 1514. Machine Used—Same as was used in grinding operation previously described. Number of Operators per Machine—One. Work-Holding Devices—Fixture, Fig. 1515. Production—144 pieces to a batch, four batches per hr.

OPERATION DD. REAMING ASSEMBLING HOLE

Number of Operators—One. Description of Operation—Reaming assembling hole. Apparatus and Equipment Used—Drilling machine and block. Gages—Fig. 1515, diameter of hole. Production—600 pieces per hr.

OPERATIONS 4 AND 5. MILLING RIGHT EDGE AND FRONT END

Transformation—Fig. 1516. Machine Used—Pratt & Whitney No. 2 Lincoln miller. Number of Machines per Operator—Four. Work-Holding Devices—Held on pins, clamped by vise jaws, Fig. 1517; double fixture, one right and left. Tool-Holding Devices—Standard arbor. Cutting Tools—Milling cutters, Fig. 1518. Number of Cuts—One. Cut Data—60 r.p.m.; 5/8-in. feed. Coolant—Cutting oil, put on with brush. Average Life of Tool Between Grindings—5,000 pieces. Gages—Fig. 1519; opening gages width; other openings gage thickness in operation 7; also gage for form of spring and working gage used at machine. Production—80 pieces per hr.

OPERATION 7. MILLING TOP AND REAR END

Transformation—Fig. 1520. Machine Used—Pratt & Whitney No. 2 Lincoln miller. Number of Machines per Operator—Four. Work-Holding Devices—Held in double vise jaws, Fig. 1521. Tool-Holding Devices—Standard arbor. Cutting Tools—Milling cutter, Fig. 1522. Number of Cuts—One. Cut Data—60 r.p.m.; 5/8-in. feed. Coolant—Cutting oil, put on with brush. Average Life of Tool Between Grindings—5,000 pieces. Gages—See Fig. 1519. Production—80 pieces per hr.

OPERATION AA. REAMING BURRS ON END LEFT BY OPERATION 7

Number of Operators—One. Description of Operation—Reaming burrs from end left by operation 7. Apparatus and Equipment Used—Hand scraper. Production—700 pieces per hr.

OPERATION BB. REMOVING BURRS ON EDGE LEFT BY OPERATION 7

Number of Operators—One. Description of Operation—Removing burrs from edge left by operation 7. Apparatus and Equipment Used—File. Production—Grouped with operation 8.

OPERATION EE. REMOVING BURRS FROM ASSEMBLING HOLE

Number of Operators—One. Description of Operation—Removing burrs from assembling hole. Apparatus and Equipment Used—Hand reamer. Production—Grouped with operation 8.

OPERATION 8. PROFILING FRONT END

Transformation—Fig. 1523. Machine Used—Pratt & Whitney No. 1 profiler. Number of Operators per Machine—One. Work-Holding Devices—On pin held by finger clamps, Fig. 1524; cams lock in place; profile form at side. Tool-Holding Devices—Taper shank. Cutting Tools—Milling cutters and holder. Number of Cuts—Two. Cut Data—1200 r.p.m.; hand feed. Coolant—Cutting oil, ¼-in. stream. Average

Life of Tool Between Grindings—250 pieces. Gages—Width of narrow part and relation to width of spring itself. Production—60 pieces per hr.

OPERATION CC. REMOVING BURRS LEFT BY OPERATION 8

Number of Operators—One. Description of Operation—Removing burrs left by operation 8. Apparatus and Equipment Used—File. Production—Grouped with operation 8.

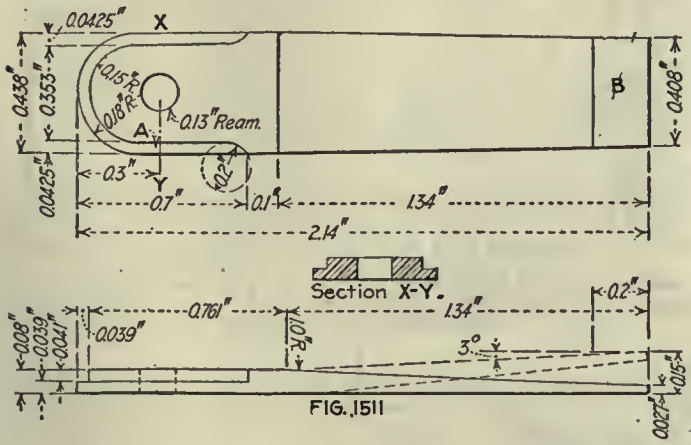

FIG. 1511

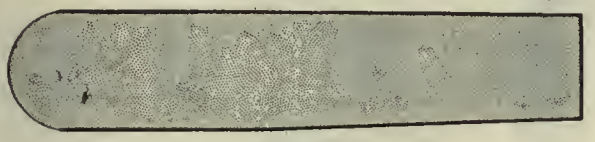

FIG. 1516

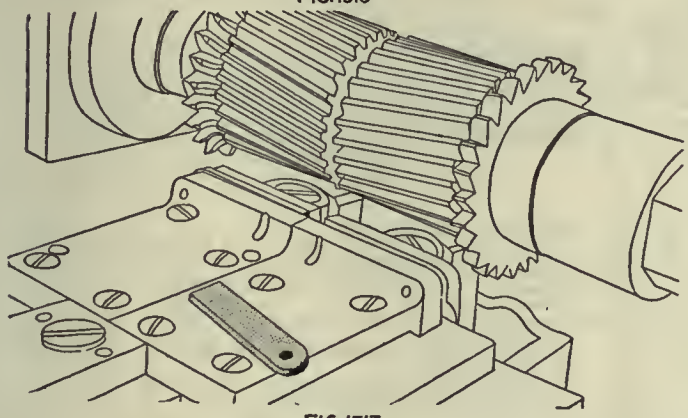

FIG. 1517

FIG. 1519

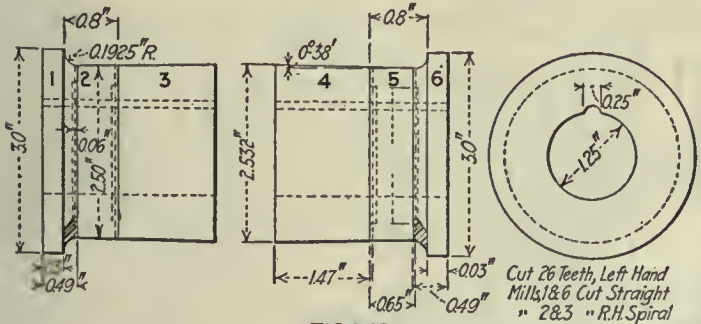

FIG. 1518
OPERATION 4 & 5

OPERATION C-1. POLISHING FREE END AND BURRING FIXED STUD

Number of Operators—One. Description of Operation—Polishing free end, burring fixed stud. Apparatus and Equipment Used—Polishing jack and wheel. Production—350 pieces per hr.

OPERATION 9. BENDING

Transformation—Fig. 1525. Machine Used—Stiles No. 1 press, 1½-in. stroke. Number of Operators per Machine—One. Punches and Punch Holders—Fig. 1526. Dies and Die Holders —Fig. 1526. Stripping Mechanism—None. Average Life of Punches and Dies—Indefinite. Lubricant—None. Gages—Fig. 1527, contour. Production—960 pieces per hr.

OPERATION 10. TEMPERING AND HARDENING

Number of Operators—One. Description of Operation—Heat in open fire to 1,450 deg. F.; quench in oil; temper in lead bath at 900 deg. F. Apparatus and Equipment Used—Same as other equipment for tempering and hardening.

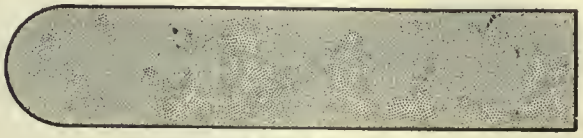

FIG. 1512
OPERATION A

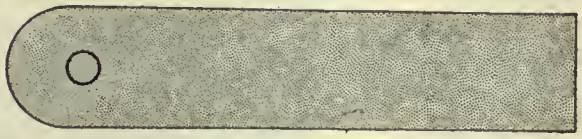

FIG. 1513
OPERATION A_1

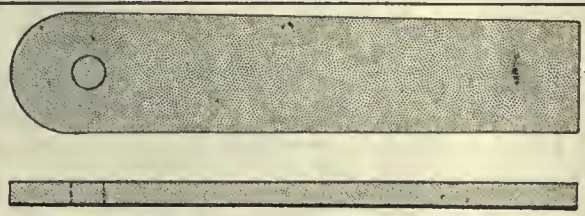

FIG. 1514

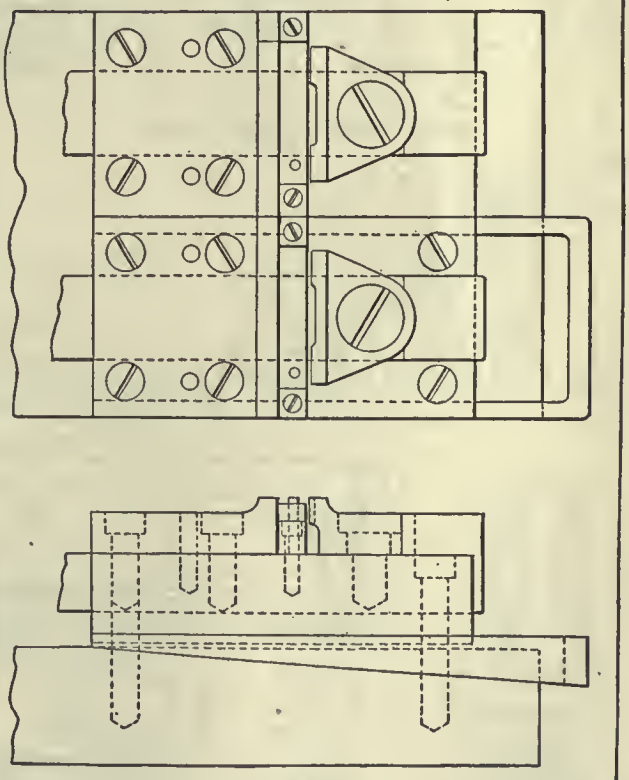

FIG. 1515
OPERATION 6

OPERATION 11. SETTING BASE SPRING AFTER ASSEMBLY

Number of Operators—One. Description of Operation—Leaf is opened and tested for squareness with movable base leg gage, Fig. 1529; if not square, the sight is placed on block, Fig. 1528, with leaf in notch of block; a blunt chisel and a light hammer are used to set spring in either direction, as may be necessary, when it is again tested. Apparatus and Equipment Used—Block, Fig. 1528; gage, Fig. 1529; hammer and blunt chisel. Gages—Fig. 1529. Production—100 per hr.

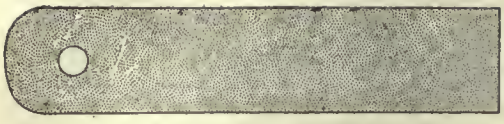

FIG. 1520

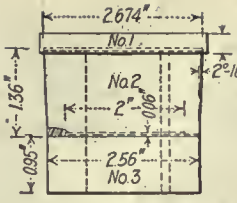

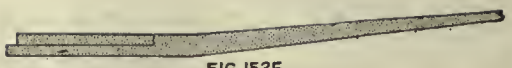

FIG. 1525

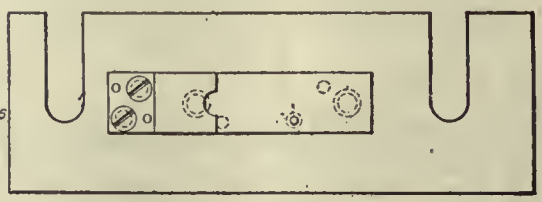

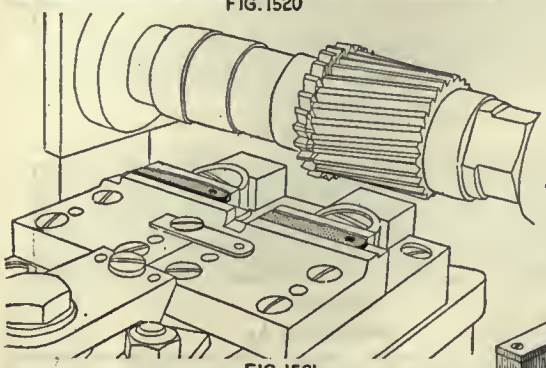

FIG. 1521

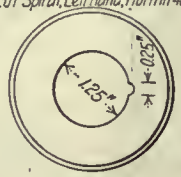

FIG. 1522

FIG. 1520, 1521 & 1522 OP. 7
FIG. 1523 & 1524 OP. 8
FIG. 1525, 1526, 1527, 1528 & 1529
OPERATION 9

This Piece must be fitted to the Machine selected for the Operation

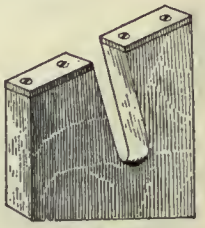

FIG. 1528

FIG. 1529

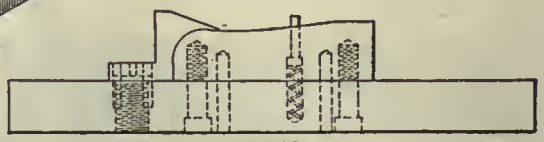

FIG. 1526

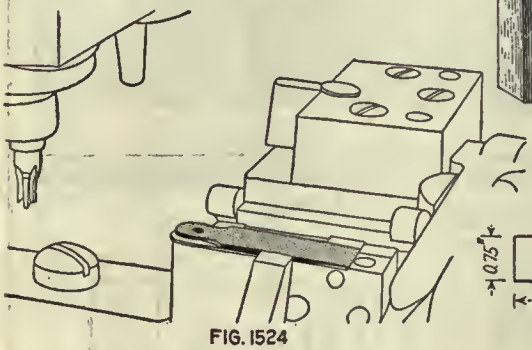

FIG. 1524

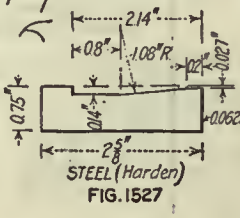

FIG. 1527

FIG. 1523

OPERATIONS ON THE LEAF

Operation	
A	Forging from bar
B	Annealing
B-1	Pickling
C	Trimming
D	Cold dropping
1	Grinding top
2	Milling right edge and rear end
3	Milling left edge
5	Drilling joint pin hole
6	Reaming joint pin hole
7	Milling bottom, roughing
8	Milling bottom to finish
CC	Removing burrs left by operation 8
8½	Draw filing for graduation
9	Stamping graduations
10	Filing edge to remove burrs left by operation 9
GG	Removing burrs from joint pin hole (reamer)
10½	Milling top of joint, crossing
FF	Removing burrs left by operation 10½
12	Milling slide slot
DD	Removing burrs left by operation 12
13	Shaving slide slot
14	Removing burrs left by operation 13
15	Straightening
17	Countersinking sighting-notch clearance
18	Hand milling sighting notch
EE	Removing burrs left by operation 18
20	Hand milling rear end of joint
15½	Filing graduation
16	Profiling drift-slide notch
HH	Removing burrs left by operation 16

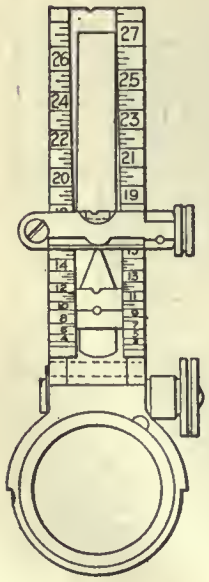

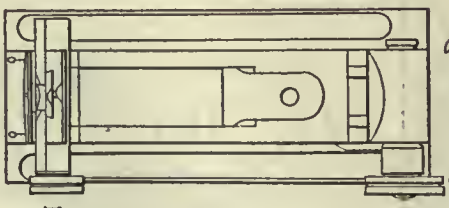

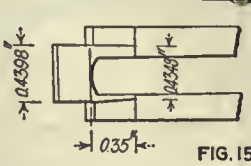

FIG. 1530

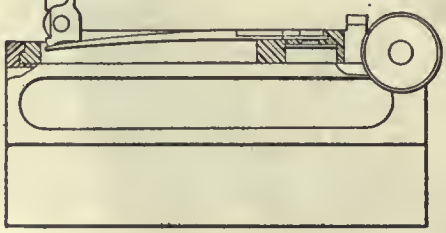

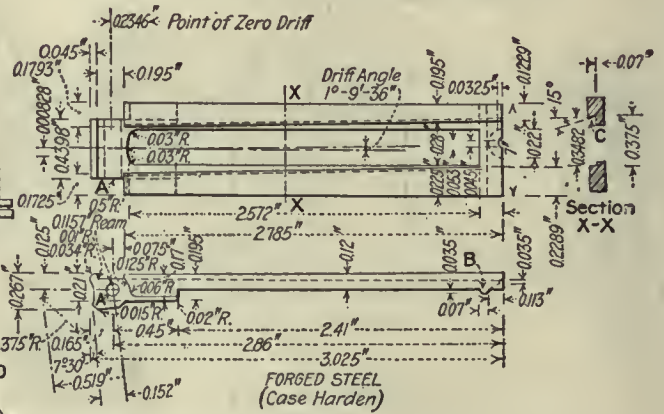

19	Counterboring joint
21	Hand milling straddle joint
22	Hand milling joint, swing fixture
23	Countersinking and reaming joint pin hole
24	Filing to gage for thickness, width, width of straight slot, width of joint and general cornering
25	Cleaning graduation
26	Filing edges of drift slot to remove burrs
27	Casehardening
28	Straightening
29	Polishing graduations with emery cloth
30	Assembling with movable base.

OPERATION A. FORGING FROM BAR

Transformation—Fig. 1531. Number of Operators—One. Description of Operation—Shaping from bar. Apparatus and Equipment Used—Billings & Spencer 600-lb. drop hammer. Production—125 pieces per hr.

OPERATION B. ANNEALING

Number of Operators—One. Description of Operation—Placed in iron pots packed with powdered charcoal, heated to 850 deg. C. (1,562 deg. F.), left over night to cool. Apparatus and Equipment Used—Brown & Sharpe annealing furnace, oil burner and powdered charcoal.

OPERATION B-1. PICKLING

Number of Operators—One. Description of Operation—Placed in wire baskets and then in the pickling solution, which consists of 1 part suiphuric acid to 9 parts water, and left in this from 10 to 12 min. Apparatus and Equipment Used—Wire basket, wooden pickling tanks, hand hoist.

OPERATION C. TRIMMING

Machine Used—Snow-Brooks No. 2 two-inch stroke. Number of Operators per Machine—One. Punches and Punch Holders—Round shank. Dies and Die Holders—Held in shoe by setscrew. Stripping Mechanism—Punched down through die. Production—500 pieces per hr.

OPERATION D. COLD DROPPING

Number of Operators—One. Description of Operation—Straightening after trimming. Apparatus and Equipment Used—Billings & Spencer 400-lb. drop hammer. Production—600 pieces per hr.

FIG. 1531
OPERATION A

FIG. 1534
OPERATION 2

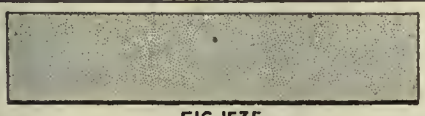

FIG. 1535

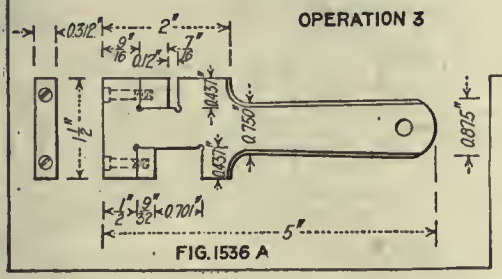

FIG. 1536 A

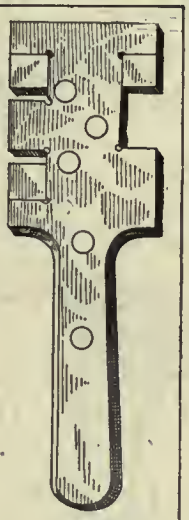

FIG. 1536

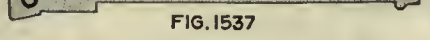

FIG. 1537

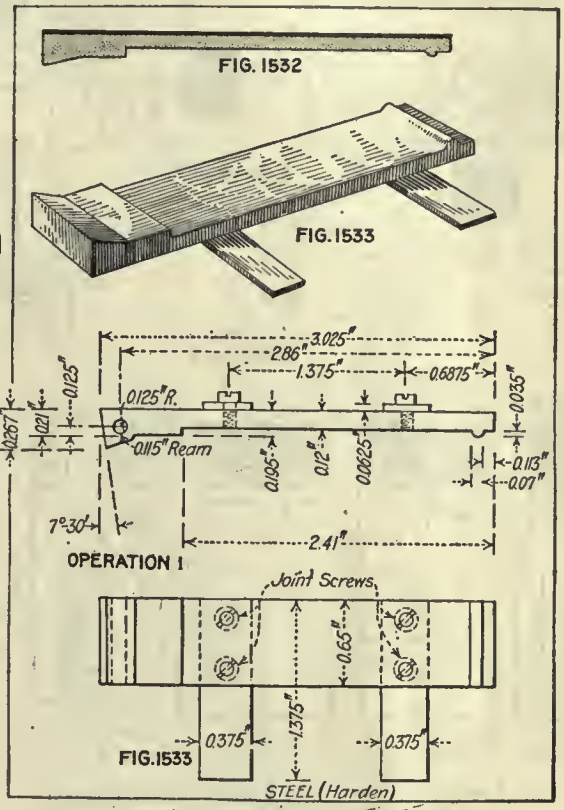

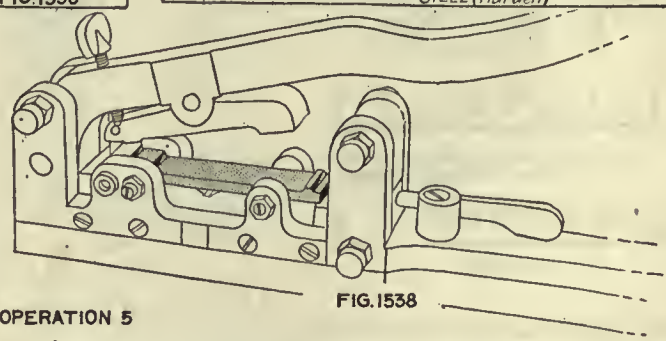

FIG. 1538

OPERATION 5

OPERATION 1. GRINDING TOP

Transformation—Fig. 1532. Machine Used—Pratt & Whitney vertical grinder. Number of Operators per Machine—One. Work-Holding Devices—30-in. magnetic chuck between strips. Tool-Holding Devices—Vertical spindle. Cutting Tools—14-in. wheel. Number of Cuts—About 15 trips of table. Cut Data—1500 r.p.m.; 15-in. feed. Coolant—Water. Gages—Fig. 1533, lay leaf on arms and see if it will clean up in future operations. Production—550 per hr.

OPERATION 2. MILLING RIGHT EDGE AND REAR END

Transformation—Fig. 1534. Machine Used—Pratt & Whitney No. 2 Lincoln miller. Number of Machines per Operator—Five. Work-Holding Devices—Special vise jaws. Tool-Holding Devices—Standard arbor. Cutting Tools—Milling cutter. Number of Cuts—One. Cut Data—70 r.p.m.; ⅛-in. feed. Coolant—Cutting oil, put on with brush. Average Life of Tool Between Grindings—5,000 pieces. Gages—None. Production—75 pieces per hr.

OPERATION 3. MILLING LEFT EDGE

Transformation—Fig. 1535. Machine Used—Pratt & Whitney No. 2 Lincoln miller. Number of Machines per Operator—Five. Work-Holding Devices—Vise jaws, same as for operation 2. Tool-Holding Devices—Standard arbor. Cutting Tools—Milling cutter similar to operation 2. Number of Cuts—One. Cut Data—70 r.p.m.; ⅛-in. feed. Coolant—Cutting oil, put on with brush. Average Life of Tool Between Grindings—5000 pieces. Gages—Fig. 1536, width. Production—75 pieces per hr.

OPERATION 5. DRILLING JOINT PIN HOLE

Transformation—Fig. 1537. Machine Used—Ames two-spindle 16-in. upright drilling machine. Number of Operators per Machine—One. Work-Holding Devices—Drill jig, Fig. 1538. Tool-Holding Devices—Drill chuck. Number of Cuts—One. Cut Data—1200 r.p.m.; hand feed. Coolant—Cutting oil, ⅛-in. stream. Average Life of Tools Between Grindings—250 pieces. Production—60 pieces per hr.

OPERATION 6. REAMING JOINT PIN HOLE

Machine Used—Ames two-spindle 16-in. upright. Number of Operators per Machine—One. Work-Holding Devices—Work held in block by thumb-screw, Fig. 1539. Tool-Holding Devices—Drill chuck. Cutting Tools—Reamer, Fig. 1540. Number of Cuts—One. Cut Data—1,200 r.p.m.; hand feed. Coolant—Cutting oil, ⅛-in. stream. Average Life of Tool Between Grindings—250 pieces. Gages—Fig 1541; diameter of hole; squareness of hole with side of leaf. Production—350 pieces per hr.

OPERATIONS 7 AND 8. MILLING BOTTOM, ROUGHING AND FINISHING

Transformation—Fig. 1542. Machine Used—Pratt & Whitney No. 2 Lincoln miller. Number of Machines per Operator—Four. Work-Holding Devices—Special vise jaws. Tool-Holding Devices—Standard arbor. Cutting Tools—Milling cutters, Fig. 1543. Number of Cuts—One. Cut Data—70 r.p.m.; ⅛-in. feed. Coolant—Cutting oil, put on with brush. Average Life of Tool Between Grindings—5,000 pieces. Gages—Width and thickness. Production—50 pieces per hr. of each operation.

OPERATION CC. REMOVING BURRS LEFT BY OPERATION 8

Number of Operators—One. Description of Operation—Removing burrs from operation 8. Apparatus and Equipment Used—File. Production—Grouped with operation 8.

OPERATION 8½. DRAW FILING FOR GRADUATIONS

Number of Operators—One. Description of Operation—Draw filing for graduations. Apparatus and Equipment Used—File. Production—275 pieces per hr.

OPERATION 9. STAMPING GRADUATIONS

Transformation—Fig. 1544. Machine Used—Roll stamping machine rebuilt at Hill shop, similar to machine for receivers. Number of Operators per Machine—One. Work-Holding Devices—Set in fixture, centered by pin in joint hole, Fig. 1545. Tool-Holding Devices—Roll; see Fig. 1546. Number of Cuts—One. Gages—Fig. 1547. Production—175 pieces per hr.

OPERATION 10. FILING EDGE TO REMOVE BURRS LEFT BY OPERATION 9

Number of Operators—One. Description of Operation—Filing edges. Apparatus and Equipment Used—File. Production—Grouped with operation 9.

OPERATION FF. REMOVING BURRS LEFT BY OPERATION 10½

Number of Operators—One. Description of Operation—Removing burrs from operation 10½. Apparatus and Equipment Used—File. Production—Grouped with operation 10½.

OPERATION 12. MILLING SLIDE SLOT

Transformation—Fig. 1550. Machine Used—Pratt & Whitney No. 2 Lincoln miller. Number of Operators per Machine—One. Work-Holding Devices—In elevating fixture, held by vise jaws, Fig. 1551. Tool-Holding Devices—Standard arbor. Cutting Tools—Milling cutter. Number of Cuts—

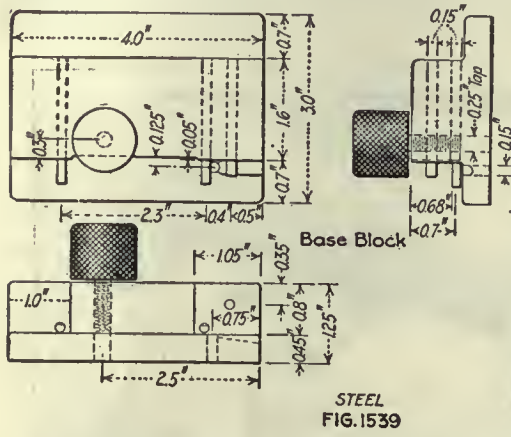

FIG. 1539

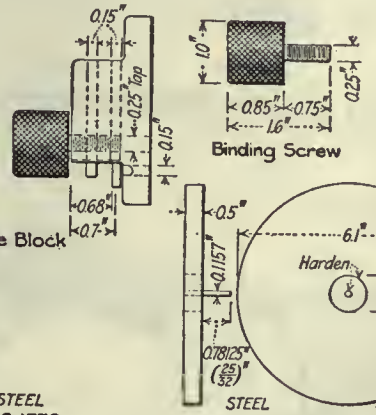

FIG. 1541

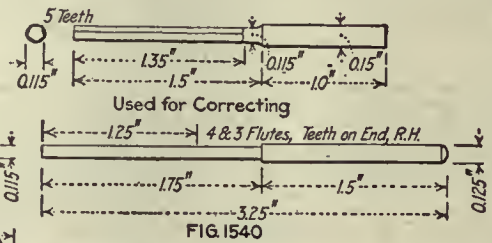

FIG. 1540

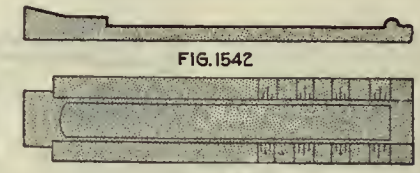

FIG. 1542

FIG. 1544

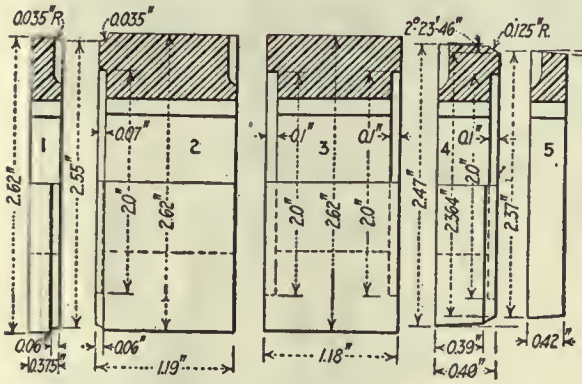

26 Teeth Left Hand, Mills 2 & 3 Spiral Left Hand, One Turn in 48 Inches, others Straight; 24 Teeth for Operation 7, Roughing

FIG. 1543

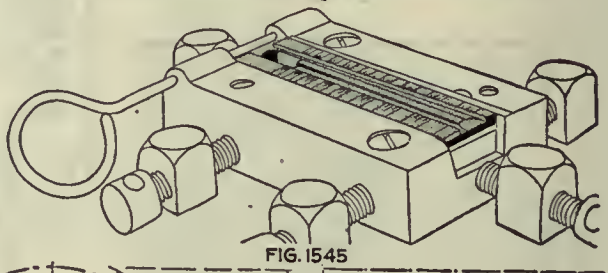

FIG. 1545

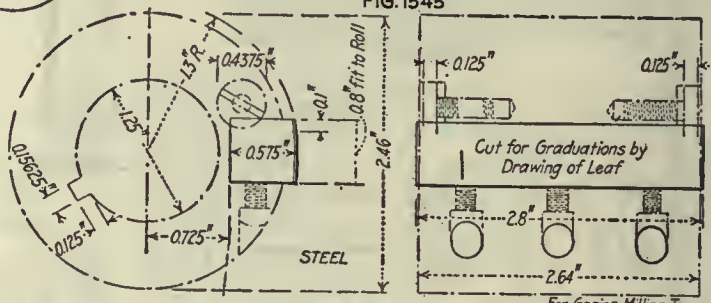

FIG. 1546

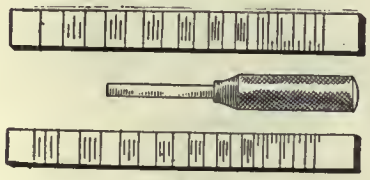

FIG. 1547

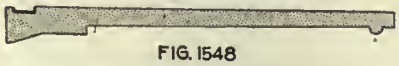

FIG. 1548

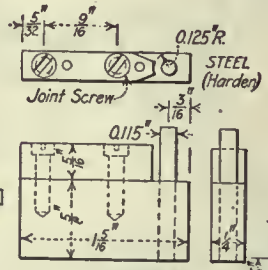

FIG. 1549-A

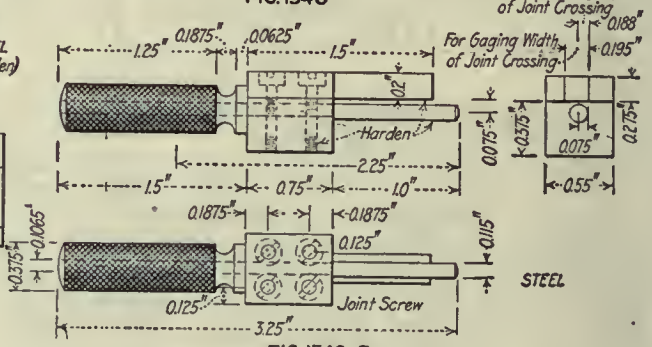

FIG. 1549-B

FIG. 1542, 1543, OP. 7 & 8
FIG. 1544, 1546, 1547 OP. 9
FIG. 1548, 1549 OP. 10½

OPERATION GG. REMOVING BURRS FROM JOINT PIN HOLE (REAMER)

Number of Operators—One. Description of Operation—Removing burrs from pin hole. Apparatus and Equipment Used—Hand reamer. Production—Grouped with operations 9 and 10.

OPERATION 10½. MILLING TOP OF JOINT, CROSSING

Transformation—Fig. 1548. Machine Used—Pratt & Whitney No. 2 Lincoln miller. Number of Machines per Operator—Four. Work-Holding Devices—Held in vise jaws on pin. Tool-Holding Devices—Standard arbor. Cutting Tools—Milling Cutter. Number of Cuts—One. Cut Data—70 r.p.m.; §-in. feed. Coolant—Cutting oil, put on with brush. Average Life of Tool Between Grindings—5000 pieces. Gages—Fig. 1549; A, radius over joint on each side; B, across both ears. Production—40 pieces per hr.

One. Cut Data—70 r.p.m.; hand feed. Coolant—Cutting oil, ⅛-in. stream. Average Life of Tool Between Grindings—5,000 pieces. Gages—Width of slot. Production—100 pieces per hr. Note—Handle at rear of fixture is for elevating fixture for width of slot.

OPERATION DD. REMOVING BURRS LEFT BY OPERATION 12

Number of Operators—One. Description of Operation—Removing burrs from operation 12. Apparatus and Equipment Used—File. Production—Grouped with operation 12.

OPERATION 13. SHAVING SLIDE SLOT

Transformation—Fig. 1552. Machine Used—Perkins-Snow No. 2 one-inch stroke press. Number of Operators per Machine—One. Punches and Punch Holders—Round shank, Fig. 1553. Dies and Die Holders—Fixture screwed to bed of press, Fig. 1554. Stripping Mechanism—None. Average Life of

Punches and Dies—700 pieces. Lubricant—Cutting or fish oil, put on with brush. Gages—Fig. 1555; width of slot; end of slot from pin; length of slot. Production—75 pieces per hr.

OPERATION 14. REMOVING BURRS LEFT BY OPERATION 13

Number of Operators—One. Description of Operation—Removing burrs from operation 13. Apparatus and Equipment Used—File. Production—Grouped with operation 13.

OPERATION 15. STRAIGHTENING

Number of Operators—One. Description of Operation—Straightening. Apparatus and Equipment Used—Lead block, hammer and straight-edge. Production—350 pieces per hr.

OPERATION 17. COUNTERSINKING SIGHTING-NOTCH CLEARANCE

Transformation—Fig. 1556. Machine Used—Sigourney three-spindle 18-in. upright drilling machine. Number of Operators per Machine—One. Work-Holding Devices—Drill jig, Fig. 1557. Tool-Holding Devices—Drill chuck. Cutting Tools—Special twist drill. Number of Cuts—One. Cut Data—900 r.p.m.; hand feed. Coolant—Cutting oil, $\frac{1}{8}$-in. stream. Average Life of Tool Between Grindings—500 pieces. Gages—Fig. 1558; depth of counterbore; the point must cover the counterbore to give distance from end. Production—75 pieces per hr.

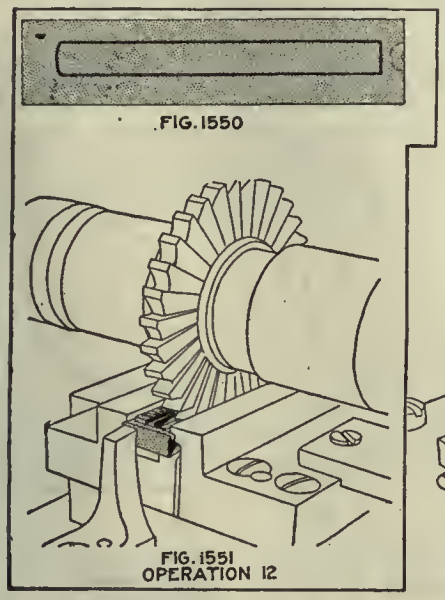

FIG. 1550

FIG. 1552

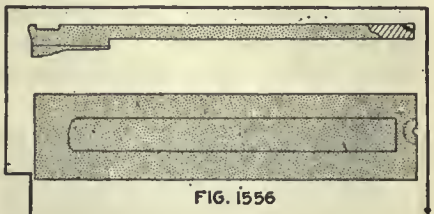

FIG. 1556

FIG. 1551
OPERATION 12

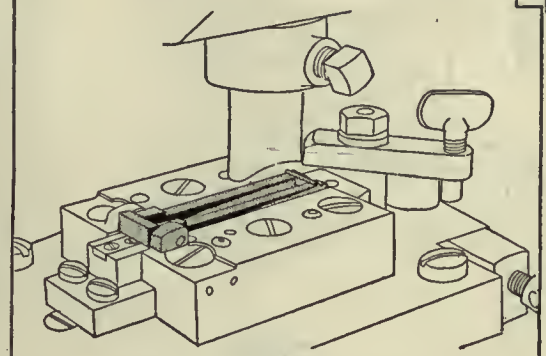

FIG. 1553

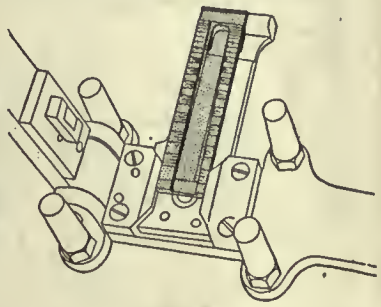

FIG. 1557

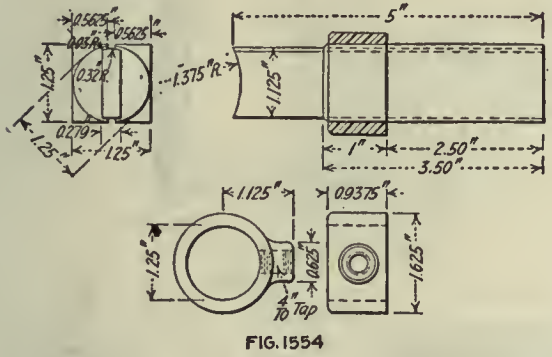

FIG. 1554

FIG. 1555

OPERATION 13

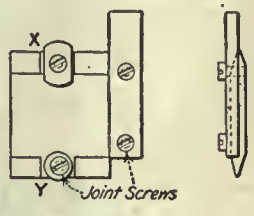

FIG. 1558
OPERATION 17

Slide and Cap

This gets us down to the smaller, if not the smallest, parts of the rifle. The slide and cap dovetail together and make practically one piece, joined around the leaf. There is no strain on these parts and it seems as though die castings would answer equally well, in which case the cost as well as the production time would be greatly reduced in making these small parts.

OPERATION EE. REMOVING BURRS LEFT BY OPERATION 18

Number of Operators—One. Description of Operation—Removing burrs from operation 18. Apparatus and Equipment Used—File. Production—Grouped with operation 18.

OPERATION 20. HAND MILLING REAR END OF JOINT

Transformation—Fig. 1563. Machine Used—Whitney hand miller. Number of Operators per Machine—One. Work-Holding Devices—Held in vise jaws, Fig. 1564. Tool-Holding Devices—Standard arbor. Cutting Tools—Form milling cutter,

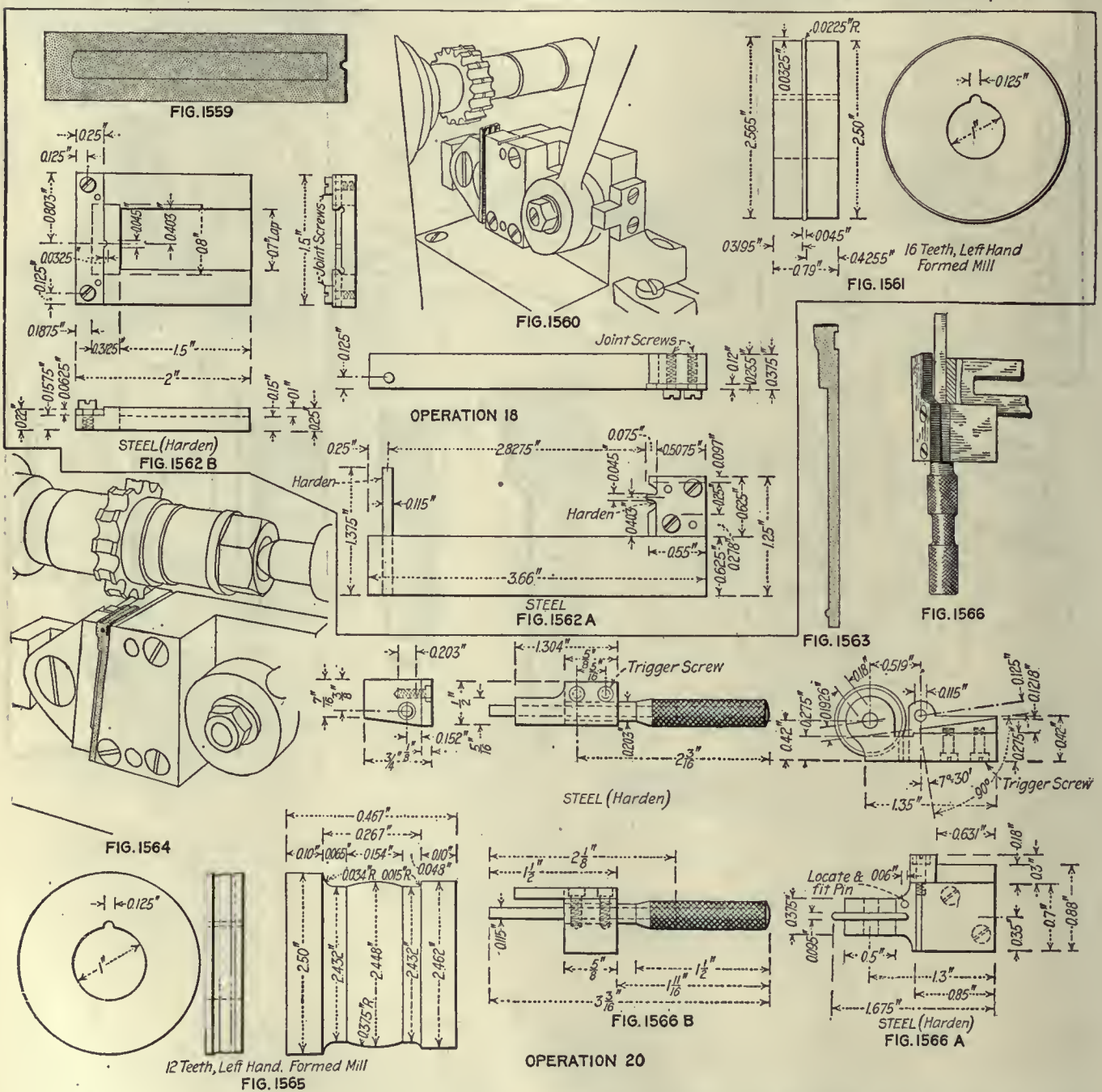

OPERATION 18. HAND MILLING SIGHTING NOTCH

Transformation—Fig. 1559. Machine Used—Garvin No. 3 hand miller. Number of Operators per Machine—One. Work-Holding Devices—Held upright in vise jaws, Fig. 1560. Tool-Holding Devices—Standard arbor. Cutting Tools—Milling cutter, Fig. 1561. Number of Cuts—One. Cut Data—450 r.p.m.; hand feed. Coolant—Cutting oil, put on with brush. Average Life of Tool Between Grindings—5000 pieces. Gages—Fig. 1562; A, location from side; B, location from hole. Production—350 pieces per hr.

Fig. 1565. Number of Cuts—One. Cut Data—600 r.p.m.; hand feed. Coolant—Cutting oil, $\frac{1}{16}$-in. stream. Average Life of Tool Between Grindings—5000 pieces. Gages—Fig. 1566; A, contour of end; B, squareness with hole. Production—175 pieces per hr.

OPERATION 15½. FILING GRADUATIONS

Number of Operators—One. Description of Operation—Filing burrs from graduations. Apparatus and Equipment Used—File. Production—350 pieces per hr.

OPERATION 16. PROFILING DRIFT-SLIDE NOTCH

Transformation—Fig. 1567. Machine Used—Pratt & Whitney No. 1 profiler. Number of Operators per Machine—One. Work-Holding Devices—Vise jaws, Fig. 1568. Tool-Holding Devices—Taper shank. Cutting Tools—Profiling cutter, Fig. 1569. Number of Cuts—Two. Cut Data—1200 r.p.m.; hand feed. Coolant—Cutting oil, ¼-in. stream. Average Life of Tool Between Grindings—500 pieces. Gages—Fig. 1570; A, size and angle of slot; B, angle of drift slot with sides. Production—45 pieces per hr.

OPERATION HH. REMOVING BURRS LEFT BY OPERATION 16

Number of Operators—One. Description of Operation—Removing burrs from operation 16. Apparatus and Equipment Used—File. Production—Grouped with operation 16.

OPERATION 19. COUNTERBORING JOINT

Transformation—Fig. 1571. Machine Used—Sigourney 16-in. three-spindle upright. Number of Operators per Machine—One. Work-Holding Devices—Drill jig, Fig. 1572. Tool-Holding Devices—Drill chuck. Cutting Tools—Counterbore. Number of Cuts—Two. Cut Data—750 r.p.m.; hand feed. Coolant—Cutting oil, ⅛-in. stream. Average Life of Tool Between Grindings—500 pieces. Gages—Diameter of counterbore. Production—55 pieces per hr.

OPERATION 21. HAND MILLING STRADDLE JOINT

Transformation—Fig. 1573. Machine Used—Whitney hand miller. Number of Operators per Machine—One. Work-Holding Devices—Pushed to stop, clamped by vise jaws, Fig. 1574. Tool-Holding Devices—Standard arbor. Cutting Tools—Straddle mills. Number of Cuts—One. Cut Data—650 r.p.m.; hand feed. Coolant—Cutting oil, put on with brush. Average Life of Tool Between Grindings—5,000 pieces. Gages—Fig. 1575; width of joint, and also its relation to the leaf; thickness. Production—175 pieces per hr.

OPERATION 22. HAND MILLING JOINT, SWING FIXTURE

Transformation—Fig. 1576. Machine Used—Garvin No. 3 hand miller. Number of Operators per Machine—One. Work-Holding Devices—Pushed to stop, clamped by jaws A, cam B and knock-out C, indexing fixture, Fig. 1577. Tool-Holding Devices—Standard arbor. Cutting Tools—Milling cutter, Fig. 1578. Number of Cuts—One. Cut Data—450 r.p.m.; hand feed. Coolant—None. Average Life of Tool Between Grindings—5000 pieces. Gages—Upper edge of joint. Production—350 pieces per hr.

OPERATION 23. COUNTERSINKING AND REAMING JOINT PIN HOLE

Number of Operators—One. Description of Operation—Countersinking and reaming pin hole. Apparatus and Equipment Used—Countersink, Fig. 1579, reamer and bench lathe. Gages—Pin. Production—450 pieces per hr.

OPERATION 24. FILING TO GAGE FOR THICKNESS, WIDTH, WIDTH OF STRAIGHT SLOT, WIDTH OF JOINT AND GENERAL CORNERING

Number of Operators—One. Description of Operation—Filing thickness to gage and width of slot, joint and general cornering. Apparatus and Equipment Used—File and gage. Gages—Width. Production—13 pieces per hr.

OPERATION 25. CLEANING GRADUATIONS

Number of Operators—One. Description of Operation—Cleaning graduations. Apparatus and Equipment Used—Hand pick. Production—35 pieces per hr.

OPERATION 26. FILING EDGES OF DRIFT SLOT TO REMOVE BURRS

Number of Operators—One. Description of Operation—Removing burrs from drift-slot edges. Apparatus and Equipment Used—File. Production—350 pieces per hr.

OPERATION 27. CASEHARDENING

Number of Operators—One. Description of Operation—Pack in ¾ bone, ¼ leather; heat to 750 deg. C. (1,382 deg F.) for 2½ hr.; quench in oil. Apparatus and Equipment Used—Same as for all other casehardening.

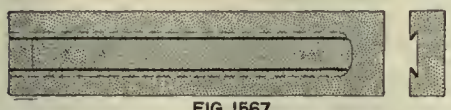
FIG. 1567

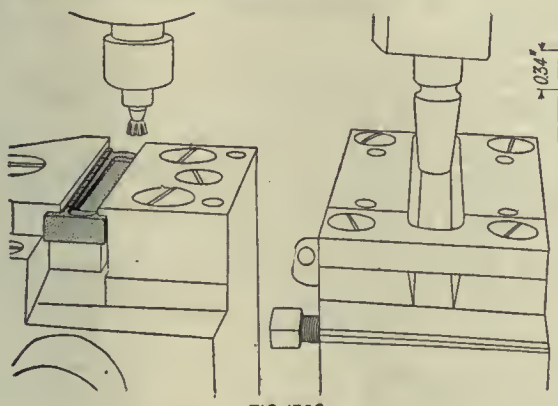
FIG. 1568

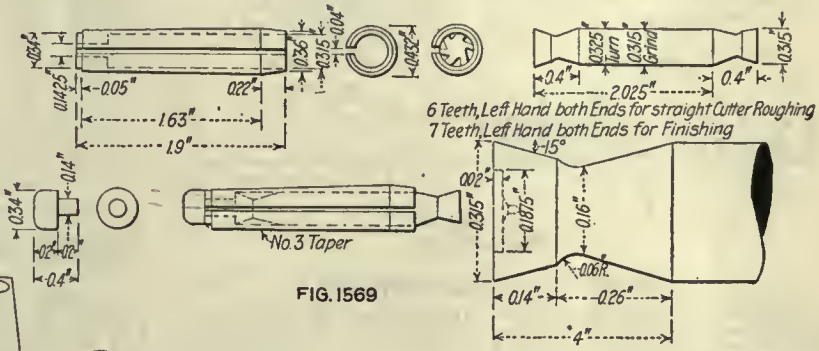

FIG. 1569

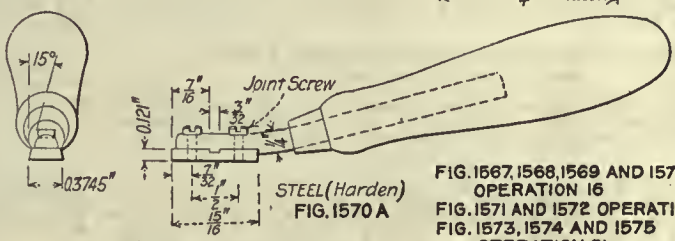

FIG. 1570 A

FIG. 1567, 1568, 1569 AND 1570 OPERATION 16
FIG. 1571 AND 1572 OPERATION 19
FIG. 1573, 1574 AND 1575 OPERATION 21

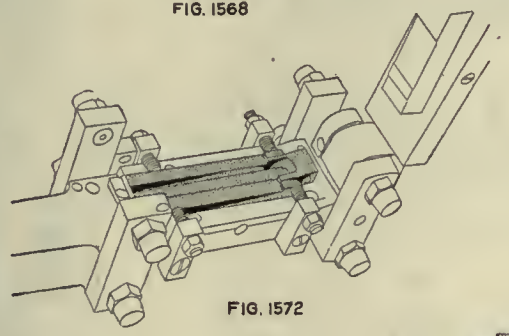
FIG. 1572

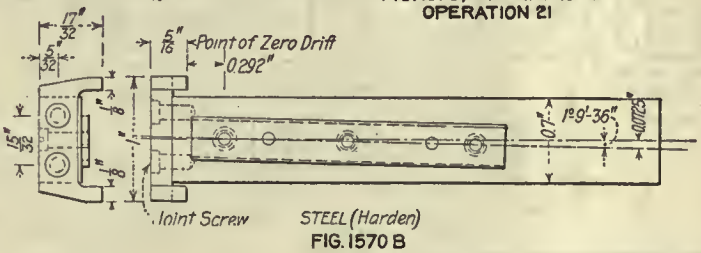

FIG. 1570 B

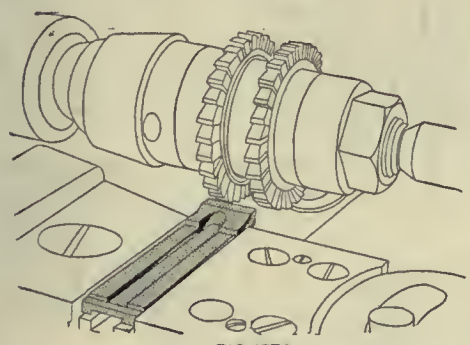
FIG. 1574

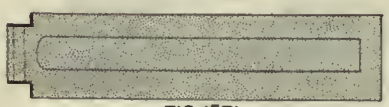
FIG. 1571

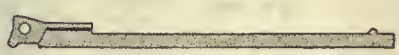
FIG. 1573

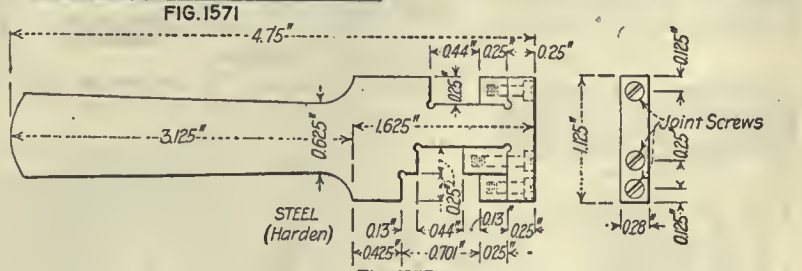

FIG. 1575

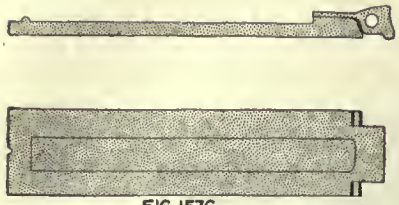

FIG. 1576

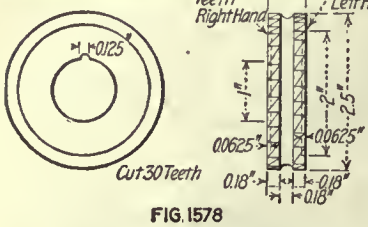

FIG. 1578

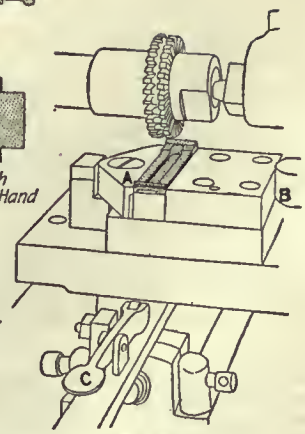

FIG. 1577

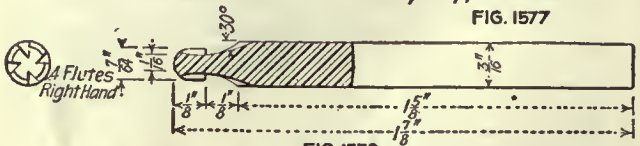

FIG. 1579
OPERATION 22

OPERATION 28. STRAIGHTENING

Number of Operators—One. Description of Operation—Straightening after hardening. Apparatus and Equipment Used—Lead block, hammer and straight-edge. Production—350 pieces per hr.

OPERATION 29. POLISHING GRADUATIONS WITH EMERY CLOTH

Number of Operators—One. Description of Operation—Polishing graduations. Apparatus and Equipment Used—Emery cloth, 000 grit. Production—350 pieces per hr.

OPERATION 30. ASSEMBLING WITH MOVABLE BASE

Number of Operators—One. Description of Operation—Assembling with movable base. Apparatus and Equipment Used—Hand and light hammer. Production—90 pieces per hr.

OPERATIONS ON THE SLIDE—FIG. 1580

Operation	
A	Forging from bar
B	Annealing
B–1	Pickling
C	Trimming
1	Grinding bottom
AA	Removing burrs left by operation 2
3	Drilling capscrew, binding-screw and pin holes
BB	Removing burrs left by operation 3
4	Reaming capscrew and binding-screw holes
CC	Removing burrs left by operation 4
2, 5, 6	Milling front and rear and both ends
DD	Removing burrs left by operation 5
EE	Removing burrs left by operation 6
7, 8	Milling top and leaf slot, rough and finish
FF	Removing burrs left by operation 7
GG	Removing burrs left by operation 8
9, 12	Tapping binding-screw holes
10, 11	Profiling cap slot
13	Tapping capscrew holes
13–A	Reaming pin hole
14	Filing to gage
15	Assembling with cap
16	Polishing ends, sides and bottom
17	Filing top and general cornering
18	Reaming pin hole, tapping slide-screw hole and turning back assembling screws
18–A	Bluing

OPERATION A. FORGING FROM BAR

Transformation—Fig. 1581. Number of Operators—One. Description of Operation—Shaping from bar. Apparatus and Equipment Used—Billings & Spencer 400-lb. drop hammer. Production—200 pieces per hr.

OPERATION B. ANNEALING

Number of Operators—One. Description of Operation—Packed in iron pots with powdered charcoal and heated to 850 deg. C. (1,562 deg. F.); left over night to cool. Apparatus and Equipment Used—Brown & Sharpe annealing furnace, oil burner and powdered charcoal.

OPERATION B-1. PICKLING

Number of Operators—One. Description of Operation—Placed in wire baskets and then in the pickling solution (1 part sulphuric acid and 9 parts water); left in this from 10 to 12 min. Apparatus and Equipment Used—Wire baskets, wooden pickling tanks and hand hoist.

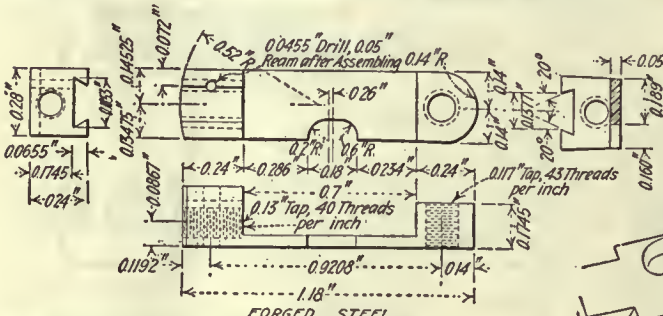

FIG. 1580

FIG. 1582

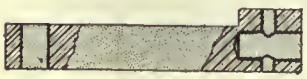

FIG. 1583

FIG. 1586

FIG. 1581

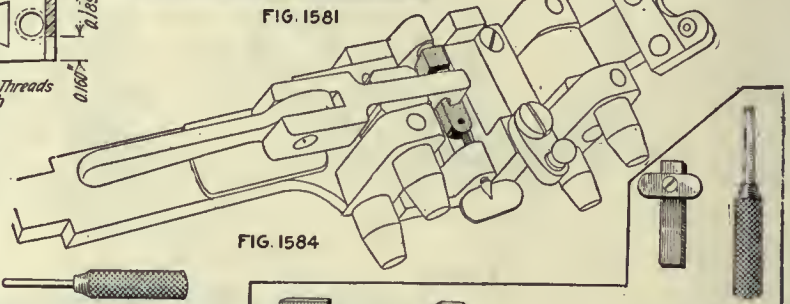

FIG. 1584

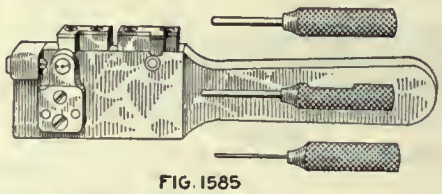

FIG. 1585

FIG. 1589

FIG. 1581 OP. A - FIG. 1582 OP. 1 - FIG. 1583, 1584, 1585 OP. 3
FIG. 1586, 1587, 1588, 1589 OP. 2, 5 & 6

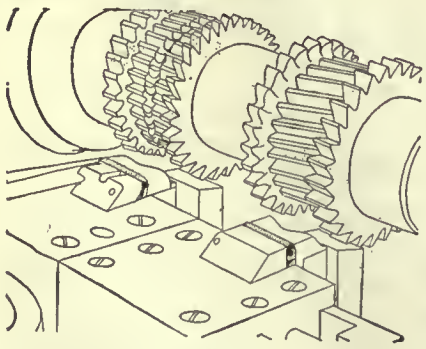

FIG. 1587

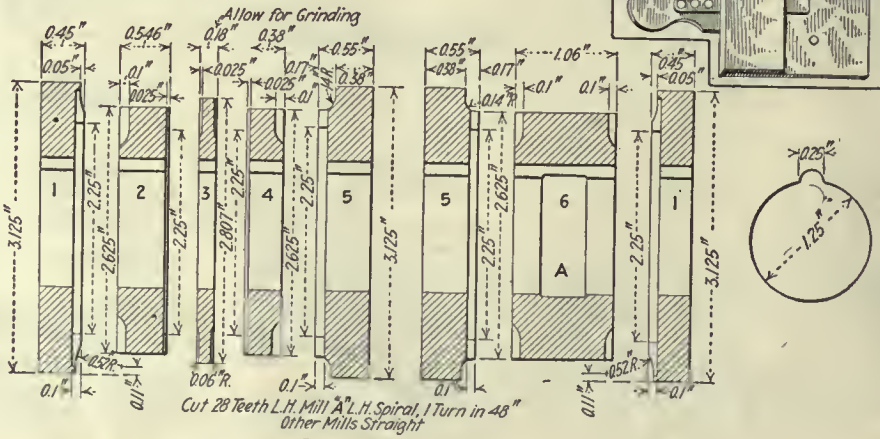

FIG. 1588

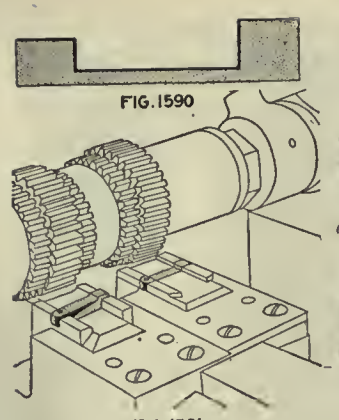

FIG. 1590

FIG. 1591

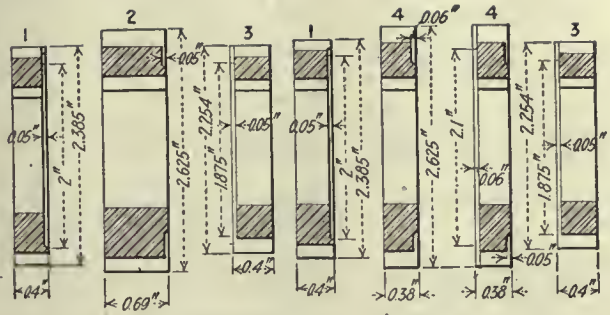

ROUGH, OPERATION 7 FINISH, OPERATION 8

FIG. 1592

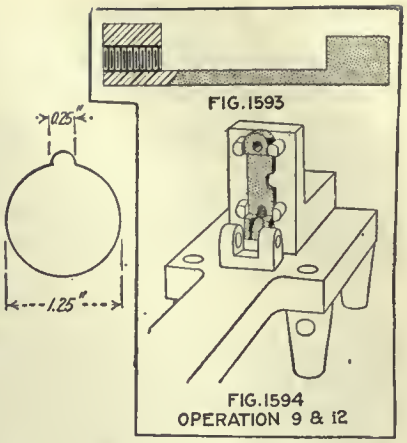

FIG. 1593

FIG. 1594
OPERATION 9 & 12

OPERATION C. TRIMMING

Machine Used—Perkins No. 19 press. Number of Operators per Machine—One. Punches and Punch Holders—Square shank. Dies and Die Holders—Held in shoe by setscrew. Stripping Mechanism—Pushed down through die. Average Life of Punches and Dies—15,000 pieces. Production—650 pieces per hr.

OPERATION 1. GRINDING

Transformation—Fig. 1582. Machine Used—Pratt & Whitney vertical grinder. Number of Operators per Machine—One. Work-Holding Devices—30-in. magnetic chuck, between strips. Tool-Holding Devices—Vertical spindle. Cutting Tools—14-in. wheel. Number of Cuts—15 passes. Cut Data—1,500 r.p.m.; 15-in. feed. Coolant—Water. Gages—None. Productions—350 per hr.

OPERATION AA. REMOVING BURRS LEFT BY OPERATION 2

Number of Operators—One. Description of Operation—Removing burrs from operation 1. Apparatus and Equipment Used—File. Production—Grouped with operation 3.

OPERATION 3. DRILLING CAPSCREW, BINDING-SCREW AND PIN HOLES

Transformation—Fig. 1583. Machine Used—Sigourney 16-in. three-spindle. Number of Operators per Machine—One. Work-Holding Devices—Drill jig, Fig. 1584. Tool-Hoiding Devices—Drill chuck. Cutting Tools—Twist drills. Number of Cuts—Two. Cut Data—900 r.p.m. Cooiant—Cutting oil, $\frac{1}{8}$-in. stream. Average Life of Tool Between Grindings—250 pieces. Gages—Fig. 1585. Production—80 pieces per hr.

OPERATION BB. REMOVING BURRS LEFT BY OPERATION 4

Number of Operators—One. Description of Operation—Removing burrs left by operation 3. Apparatus and Equipment Used—File. Production—Grouped with operations 3 and 4.

OPERATION 4. REAMING CAPSCREW AND BINDING-SCREW HOLES

Machine Used—Sigourney 16-in. three-spindle. Number of Operators per Machine—One. Work-Holding Devices—Drill jig. Tool-Holding Devices—Drill chuck. Cutting Tools—Reamer. Number of Cuts—Two. Cut Data—900 r.p.m. Coolant—Cutting oil, $\frac{1}{8}$-in. stream. Average Life of Tool Between Grindings—250 pieces. Gages—See Fig. 1585. Production—175 pieces per hr.

OPERATION CC. REMOVING BURRS LEFT BY OPERATION 4

Number of Operators—One. Description of Operation—Removing burrs thrown up by operation 4. Apparatus and Equipment Used—File. Production—Grouped with operations 3 and 4.

OPERATIONS 2, 5, 6. MILLING FRONT AND REAR AND BOTH ENDS

Transformation—Fig. 1586. Machine Used—Pratt & Whitney No. 2 Lincoln miiier. Number of Machines per Operator—Five. Work-Hoiding Devices—Miller vise jaws, Fig. 1587.

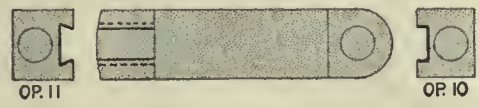

FIG. 1595

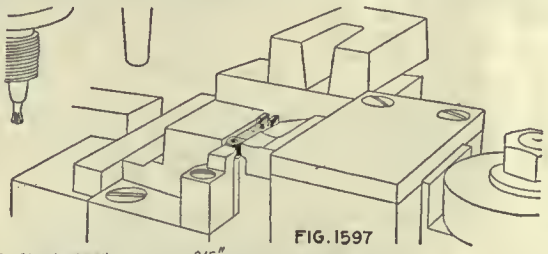

FIG. 1597

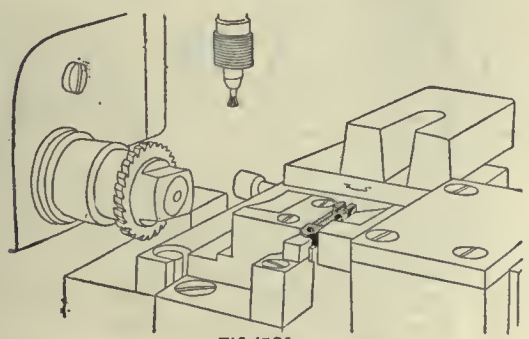

FIG. 1596

FIG. 1599

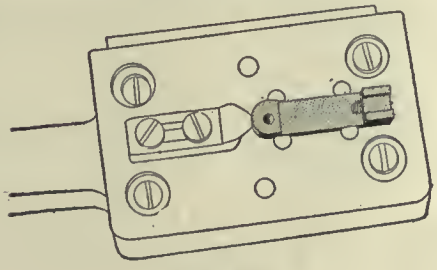

FIG. 1600

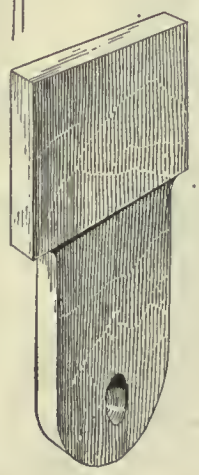

FIG. 1601

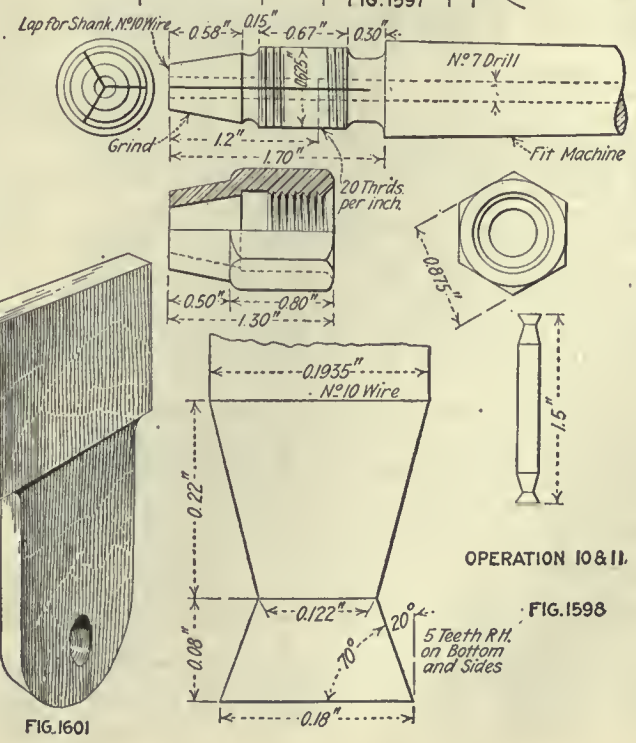

OPERATION 10 & 11.

FIG. 1598

Tool-Holding Devices—Standard arbor. Cutting Tools—Two gangs of cutters, Fig. 1588. Number of Cuts—One. Cut Data—70 r.p.m.; ⅛-in. feed. Coolant—Cutting oil, put on with brush. Average Life of Tool Between Grindings—5000 pieces. Gages—Fig. 1589. Production—30 pieces per hr.

OPERATION DD. REMOVING BURRS LEFT BY OPERATION 5

Number of Operators—One. Description of Operation—Removing burrs thrown up by operation 5. Apparatus and Equipment Used—File. Production—Grouped with operations 2, 5 and 6.

OPERATION EE. REMOVING BURRS LEFT BY OPERATION 6

Number of Operators—One. Description of Operation—Removing burrs from operation 6. Apparatus and Equipment Used—File. Production—Grouped with operations 2, 5 and 6.

OPERATIONS 7 AND 8. MILLING TOP AND LEAF SLOT, ROUGH AND FINISH

Transformation—Fig. 1590. Machine Used—Pratt & Whitney No. 2 Lincoln miller. Number of Machines per Operator—Five. Work-Holding Devices—Special vise jaws, Fig. 1591; work located on pin. Tool-Holding Devices—Standard arbor. Cutting Tools—Fig. 1592. Number of Cuts—One. Cut Data—70 r.p.m.; ⅛-in. feed. Coolant—Cutting oil, put on with brush. Average Life of Tool Between Grindings—5000 pieces. Gages—Width of slot. Production—30 pieces per hr.

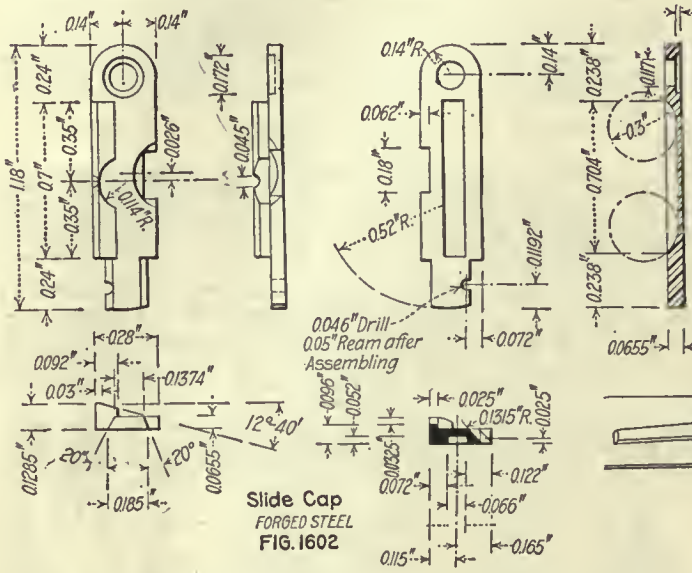

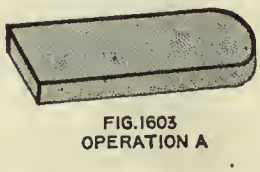

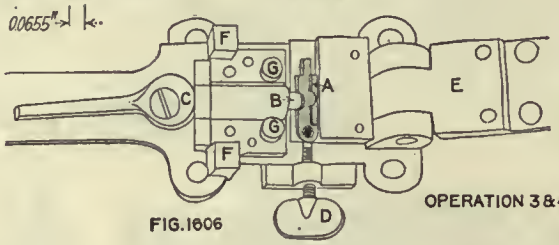

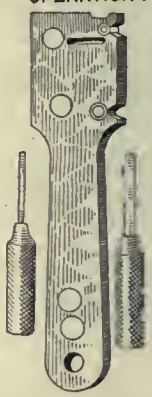

OPERATION FF. REMOVING BURRS LEFT BY OPERATION 7

Number of Operators—One. Description of Operation—Removing burrs from operation 7. Apparatus and Equipment Used—File. Production—Grouped with operations 7 and 8.

OPERATION GG. REMOVING BURRS LEFT BY OPERATION 8

Number of Operators—One. Description of Operation—Removing burrs from operation 8. Apparatus and Equipment Used—File. Production—Grouped with operations 7 and 8.

OPERATIONS 9 AND 12. TAPPING CAPSCREW HOLES

Transformation—Fig. 1593. Machine Used—Garvin upright tapping machine. Number of Operators per Machine—One. Work-Holding Devices—Tapping jig, Fig. 1594. Tool-Holding Devices—Drill chuck. Cutting Tools—Tap. Number of Cuts—One. Cut Data—50 r.p.m. Coolant—Cutting oil, ⅛-in. stream. Average Life of Tool Between Grindings—300 pieces. Gages—Threaded plug. Production—350 pieces per hr.

OPERATIONS 10 AND 11. PROFILING CAP SLOT

Transformation—Fig. 1595. Machine Used—Pratt & Whitney No. 1 profiler; milling attachment in Fig. 1596. Number of Operators per Machine—One. Work-Holding Devices—Held on pin, clamped by vise jaws; milling fixture, profiling fixture and form in Fig. 1597. Tool-Holding Devices—Taper shank. Cutting Tools—Milling cutter, Fig. 1598; profiling cutter. Number of Cuts—Two. Cut Data—1200 r.p.m.; hand feed. Coolant—Cutting oil, ⅛-in. stream. Average Life of Tool Between Grindings—300 pieces. Gages—Form of slot. Production—65 pieces per hr.

OPERATION 13. TAPPING CAPSCREW HOLES

Transformation—Fig. 1599. Machine Used—Garvin upright tapping machine. Number of Operators per Machine—One. Work-Holding Devices—Tapping jig, Fig. 1600. Tool-Holding Devices—Drill chuck. Cutting Tools—Tap. Number of Cuts—One. Cut Data—50 r.p.m. Coolant—Cutting oil, ⅛-in. stream. Average Life of Tool Between Grindings—300 pieces. Gages—Threaded plug. Production—400 pieces per hr.

OPERATION 13-A. REAMING PIN HOLE

Number of Operators—One. Description of Operation—Reaming pin hole and removing burrs thrown down by milling. Apparatus and Equipment Used—Bench lathe and reamer. Production—350 pieces per hr.

OPERATION 14. FILING TO GAGE

Number of Operators—One. Description of Operation—Filing inside of slide to gage. Apparatus and Equipment Used—File and gage. Gages—Fig. 1601, size of leaf. Production—125 pieces per hr.

OPERATION 15. ASSEMBLING WITH CAP

Number of Operators—One. Description of Operation—Assembling with cap. Apparatus and Equipment Used—Hand screwdriver. Production—350 pieces per hr.

OPERATION 16. POLISHING ENDS, SIDE AND BOTTOM

Number of Operators—One. Description of Operation—Polishing outside. Apparatus and Equipment Used—Polishing jack and wheel. Production—80 pieces per hr.

OPERATION 17. FILING TOP AND GENERAL CORNERING

Number of Operators—One. Description of Operation—Filing and cornering. Apparatus and Equipment Used—File. Production—35 pieces per hr.

OPERATION 18-A. BLUING

Number of Operators—One. Description of Operation—Heated to 800 deg. F. in niter. Apparatus and Equipment Used—Same as for other bluing operations.

OPERATION 18. REAMING PIN HOLE, TAPPING SLIDE-SCREW HOLE AND TURNING BACK ASSEMBLING SCREWS

Number of Operators—One. Description of Operation—Reaming pin and tap hole, tapping slide-screw hole, retapping hole. Apparatus and Equipment Used—Speed lathe and reamer. Gages—None. Production—175 pieces per hr.

OPERATIONS ON SLIDE CAP—FIG. 1602

Operation	
A	Forging from bar
B	Annealing
B-1	Pickling
C	Trimming
1	Grinding bottom
3	Drilling capscrew and pin holes
4	Reaming capscrew hole
BB	Removing burrs left by operation 4
5 and 6	Milling front and rear edges and both ends
CC	Removing burrs left by operation 5
DD	Removing burrs left by operation 6
7	Milling top, lengthwise
EE	Removing burrs left by operation 7
II	Removing burrs from capscrew hole (reamer)
8	End milling peep-notch clearance
9	Countersinking field-view clearance
10	Milling top, buckhorn and peep notch
FF	Removing burrs left by operation 10
11	Hand milling dovetail
12	Hand milling slot for drift-slide pin
GG	Removing burrs left by operations 11 and 12
13	Counterboring screw hole
HH	Removing burrs left by operation 13
14	Filing off burrs
15	Filing in jig

OPERATION A. FORGING FROM BAR

Transformation—Fig. 1603. Number of Operators—One. Description of Operation—Shaping from bar. Apparatus and Equipment Used—Billings & Spencer 400-lb. drop hammer. Production—200 pieces per hr.

OPERATION B. ANNEALING

Number of Operators—One. Description of Operation—Placed in iron pots packed with powdered charcoal and heated to 850 deg. C. (1,562 deg. F.); left over night to cool. Apparatus and Equipment Used—Brown & Sharpe annealing furnace, oil burner and powdered charcoal.

OPERATION B-1. PICKLING

Number of Operators—One. Description of Operation—Put in wire baskets and placed in the pickling solution (1 part sulphuric acid to 9 parts water) and left in this from 10 to 12 min. Apparatus and Equipment Used—Wire baskets, wooden pickling tanks, hand hoist.

OPERATION C. TRIMMING

Machine Used—Perkins No. 19 press, 1½-in. stroke. Number of Operators per Machine—One. Punches and Punch Holders—Square shank. Dies and Die Holders—In shoe by setscrew. Stripping Mechanism—Pushed down through die. Average Life of Punches and Dies—15,000 pieces. Production—600 pieces per hr.

OPERATION 1. GRINDING BOTTOM

Transformation—Fig. 1604. Machine Used—Pratt & Whitney vertical grinder. Number of Operators per Machine—One. Work-Holding Devices—30-in. magnetic chuck, between steel strips. Tool-Holding Devices—Vertical spindle. Cutting Tools—14-in. wheel. Number of Cuts—15 trips of table. Cut Data—1,500 r.p.m.; 15-in. feed. Coolant—Water. Production—574 per hr.

OPERATIONS 3 AND 4. DRILLING AND REAMING CAPSCREW AND PIN HOLES

Transformation—Fig. 1605. Machine Used—Sigourney 16-in. three-spindle drill. Number of Operators per Machine—One. Work-Holding Devices—Drill jig, Fig. 1606; work held at A by plunger B; moved by cam C; positioned by thumbscrew D; bushings are in leaf E, which is held between ears F; positioned by studs GG. Tool-Holding Devices—Drill chuck. Cutting Tools—Reamer. Number of Cuts—Two. Cut Data—750 r.p.m.; hand feed. Coolant—Cutting oil, $\frac{1}{8}$-in. stream. Average Life of Tool Between Grindings—250 pieces. Gages—Location and diameter of holes, Fig. 1607. Production—350 pieces per hr.

OPERATION BB. REMOVING BURRS LEFT BY OPERATION 4

Number of Operators—One. Description of Operation—Removing burrs thrown up by operation 4. Apparatus and Equipment Used—File. Production—Grouped with operation 4.

OPERATIONS 5 AND 6. MILLING FRONT AND REAR EDGES AND BOTH ENDS

Transformation—Fig. 1608. Machine Used—Pratt & Whitney No. 2 Lincoln miller. Number of Machines per Operator—Five. Work-Holding Devices—Held on pin, clamped by vise jaws. Tool-Holding Devices—Standard arbor. Cutting Tools—Gang of milling cutters, Fig. 1609. Number of Cuts—One. Cut Data—70 r.p.m.; $\frac{1}{8}$-in. feed. Coolant—Cutting oil, put on with brush. Average Life of Tool Between Grindings—10,000 pieces. Gages—Length and width; location of slot from pin. Production—30 pieces per hr. Note—Work is located from hole at end.

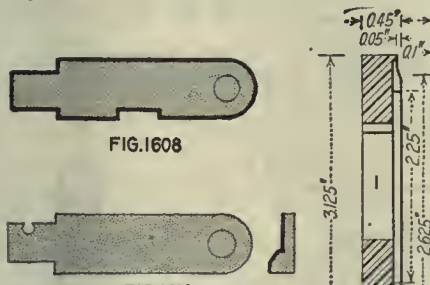
FIG.1608

FIG.1610

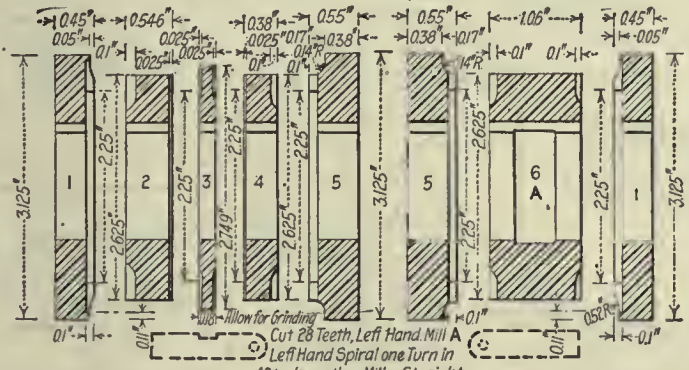

FIG.1609

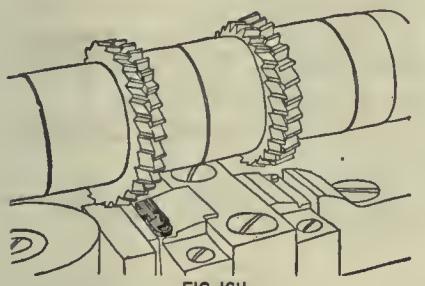
FIG.1611

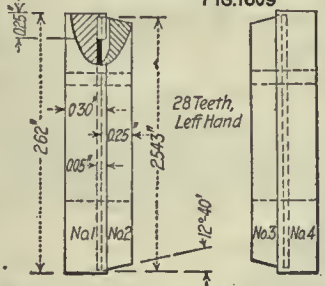

Mills No.1&3 Left Hand Spiral 1 Turn in 26.67 Inches
Mills No.2&4 Right Hand Spiral 1 Turn in 26.67 Inches
FIG.1612

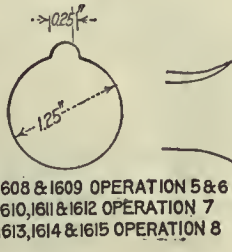

FIG.1608 & 1609 OPERATION 5 & 6
FIG.1610, 1611 & 1612 OPERATION 7
FIG.1613, 1614 & 1615 OPERATION 8

OPERATION CC. REMOVING BURRS LEFT BY OPERATION 5

Number of Operators—One. Description of Operation—Removing burrs from operations 5 and 6. Apparatus and Equipment Used—File. Production—Grouped with operations 5 and 6.

OPERATION DD. REMOVING BURRS FROM OPERATION 6

Number of Operators—One. Description of Operation—Removing burrs from operation 6. Apparatus and Equipment Used—File. Production—Grouped with operations 5 and 6.

OPERATION 7. MILLING TOP LENGTHWISE

Transformation—Fig. 1610. Machine Used—Pratt & Whitney No. 2 Lincoln miller. Number of Machines per Operator—Five. Work-Holding Devices—Held on pin, clamped by vise jaws, Fig. 1611. Tool-Holding Devices—Standard arbor. Cutting Tools—Milling cutter, Fig. 1612. Number of Cuts—One. Cut Data—70 r.p.m; $\frac{1}{8}$-in. feed. Coolant—Cutting oil, put on with brush. Average Life of Tool Between Grindings—10,000 pieces. Gages—Thickness. Production—30 pieces per hr.

OPERATION EE. REMOVING BURRS LEFT BY OPERATION 7

Number of Operators—One. Description of Operation—Removing burrs from operation 7. Apparatus and Equipment Used—File. Production—Grouped with operation 7.

OPERATION II. REMOVING BURRS FROM CAPSCREW HOLE

Number of Operators—One. Description of Operation—Removing burrs from capscrew hole. Apparatus and Equipment Used—Hand reamer. Production—Grouped with operation 8.

OPERATION 8. END MILLING PEEP-NOTCH CLEARANCE

Transformation—Fig. 1613. Machine Used—Sigourney 16-in. three-spindle. Number of Operators per Machine—One. Work-Holding Devices—Drill jig; work held on pin, Fig. 1614. Tool-Holding Devices—Drill chuck. Cutting Tools—Counterbore or end mill. Number of Cuts—One. Cut Data—900 r.p.m.; hand feed. Coolant—Cutting oil, $\frac{1}{8}$-in. stream. Average Life of Tool Between Grindings—500 pieces. Gages—Fig. 1615, location of counterbore from pin hole. Production—200 pieces per hr.

OPERATION 9. COUNTERSINKING FIELD-VIEW CLEARANCE

Transformation—Fig. 1616. Machine Used—Sigourney Tool Co. 16-in. three-spindle. Number of Operators per Machine—One. Work-Holding Devices—Drill jig, Fig. 1617; work held by clamp A, which also guides end of countersink, in connection with swinging leaf B. Tool-Holding Devices—Drill chuck. Cutting Tools—Round-ended countersink, Fig. 1618. Number of Cuts—One. Cut Data—750 r.p.m.; hand feed. Coolant—Cutting oil, $\frac{1}{8}$-in. stream. Average Life of Tool Between Grindings—500 pieces. Gages—Contour and angle of countersink. Production—350 pieces per hr.

OPERATION 10. MILLING TOP, BUCKHORN AND PEEP NOTCH

Transformation—Fig. 1619. Machine Used—Pratt & Whitney No. 2 Lincoln miller. Number of Machines per Operator—Five. Work-Holding Devices—Held on pin, clamped by vise jaws, Fig. 1620. Tool-Holding Devices—Standard arbor. Cutting Tools—Milling cutters, Fig. 1621. Number of Cuts—One. Cut Data—70 r.p.m.; $\frac{1}{8}$-in. feed. Coolant—Cutting oil, put on with brush. Average Life of Tool Between Grindings—10,000 pieces. Gages—Fig. 1622; contour; location of notch; cap fits over pin X at end, and plug Y gages and locates. Production—30 pieces per hr.

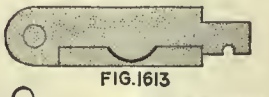
FIG.1613

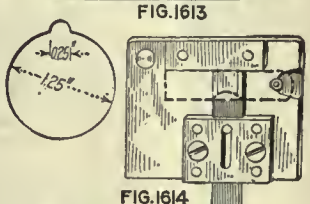

FIG.1614

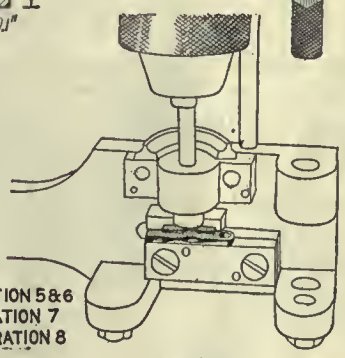
FIG.1615

OPERATION FF. REMOVING BURRS LEFT BY OPERATION 10

Number of Operators—One. Description of Operation—Removing burrs thrown up by operation 10. Apparatus and Equipment Used—File. Production—Grouped with operation 11.

OPERATION 11. HAND MILLING DOVETAIL

Transformation—Fig. 1623. Machine Used—Whitney hand miller. Number of Operators per Machine—One. Work-Holding Devices—Held on pin, indexing fixture, Fig. 1624; work located on pin, held by bar A, which is locked by clamp B; fixture indexes in two positions to mill both sides of dovetail. Tool-Holding Devices—Taper shank. Cutting Tools—Milling cutters. Number of Cuts—One. Cut Data—650 r.p.m.; hand feed. Coolant—Cutting oil. Average Life of Tool Between Grindings—5000 pieces. Gages—Fig. 1625, size of dovetail. Production—350 pieces per hr.

OPERATION 12. HAND MILLING SLOT FOR DRIFT-SLIDE PIN

Transformation—Fig. 1626. Machine Used—Whitney hand miller. Number of Operators per Machine—One. Work-Holding Devices—Held on pin, clamped by vise jaws, Fig. 1627; vise has stops A and B to limit movement. Tool-Holding Devices—Taper shank. Cutting Tools—Milling cutter, Fig. 1628. Cut Data—900 r.p.m.; hand feed. Coolant—Cutting oil, $\frac{1}{8}$-in. stream. Average Life of Tool Between Grindings—1500 pieces. Gages—Fig. 1629; location of slot from side, and width of slot. Production—350 pieces per hr.

FIG. 1616

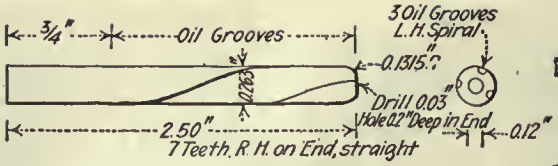

FIG. 1618

FIG. 1619

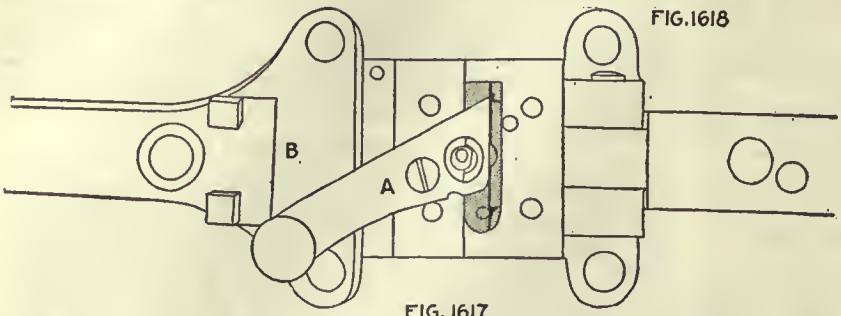

FIG. 1617

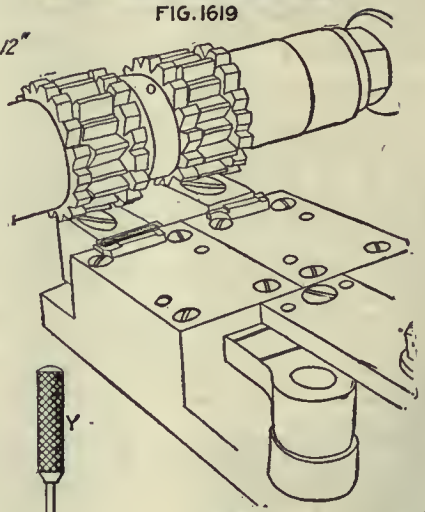

FIG. 1620

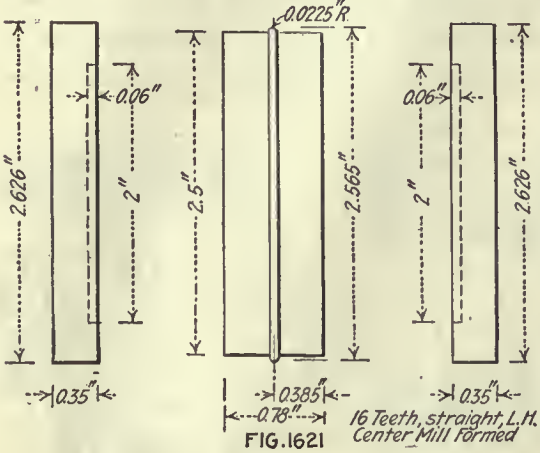

FIG. 1621

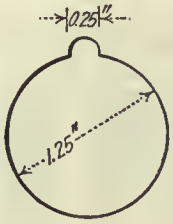

FIG. 1616, 1617, 1618 OP. 9
FIG. 1619, 1620, 1621, 1622 OP. 10

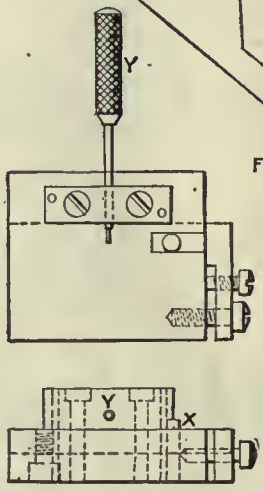

FIG. 1622

OPERATION GG. REMOVING BURRS LEFT BY OPERATIONS 11 AND 12

Number of Operators—One. Description of Operation—Removing burrs left by operations 11 and 12. Apparatus and Equipment Used—File. Production—Grouped with operations 11 and 12.

OPERATION 13. COUNTERBORING SCREW HOLES

Transformation—Fig. 1630. Machine Used—Bench lathe. Number of Operators per Machine—One. Cutting Tools—Counterbore. Gages—Diameter and depth, for screw body and head. Production—500 pieces per hr.

OPERATION HH. REMOVING BURRS

Number of Operators—One. Description of Operation—Removing burrs from operation 13. Apparatus and Equipment Used—File. Production—Grouped with operations 11, 12 and 13.

OPERATION 14. FILING OFF BURRS

Number of Operators—One. Description of Operation—Filing off burrs. Apparatus and Equipment Used—File. Production—Grouped with operation 15.

OPERATION 15. FILING IN JIG

Number of Operators—One. Description of Operation—Jig filing to shape. Apparatus and Equipment Used—File and jig. Production—350 pieces per hr.

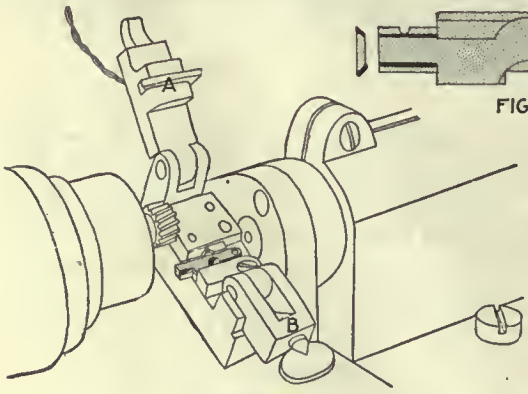

FIG. 1624

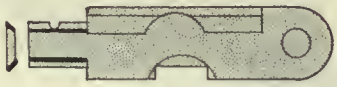

FIG. 1623

FIG. 1626

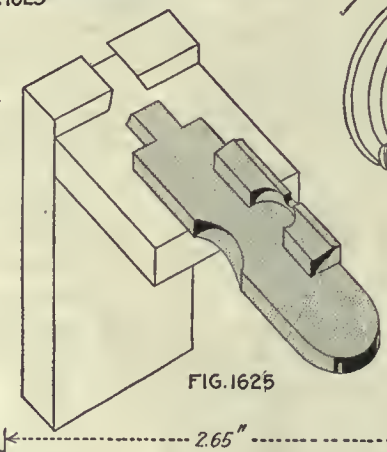

FIG. 1625

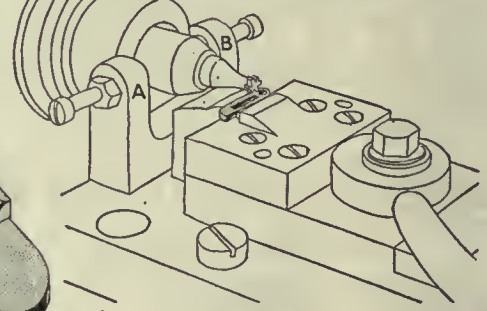

FIG. 1627

FIG. 1629

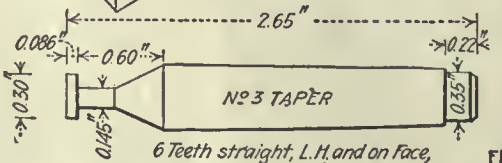

FIG. 1628

FIG. 1630

FIG. 1623, 1624, 1625 OP. 11
FIG. 1626, 1627, 1628, 1629 OP. 12
FIG. 1630

Drift Slides, Windage Screw, and Butt Plate

The standard peep sight has a hole 0.05 in. in diameter, but drawings for both the 0.04 and 0.06 in. sight are given. These are forged and then milled to fit the dovetail in the leaf, in which the sight slides.

The windage screw, which swings the movable base to allow for side wind on the bullet, is shown in Fig. 1654. This is cut with a special attachment made for this purpose.

*Copyright, 1917, McGraw-Hill Publishing Co., Inc.

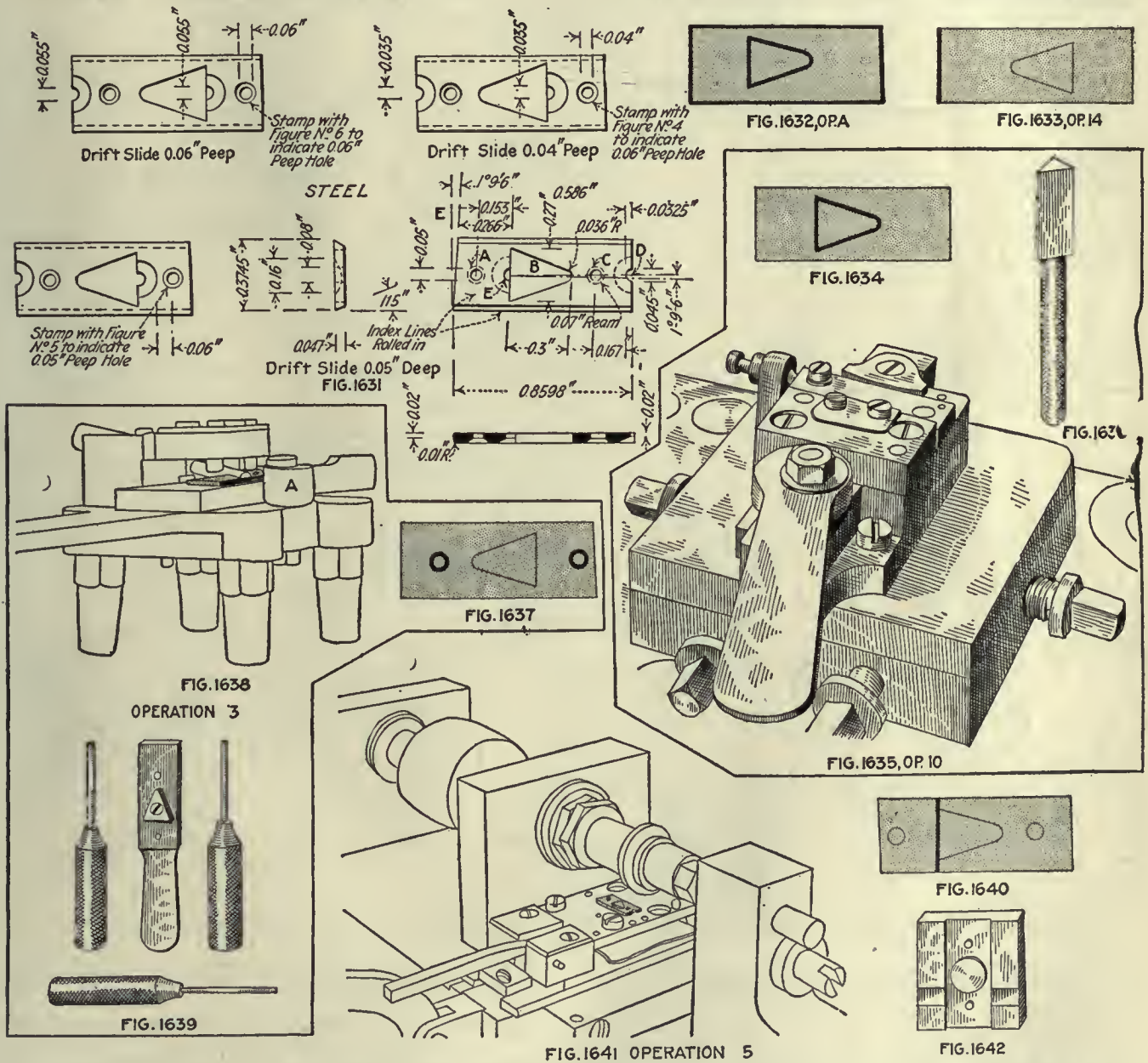

OPERATIONS ON THE DRIFT SLIDE, 0.05 PEEP

Operation	
A	Blanking
B	Cold dropping
14	Hand milling rear end
10	Shaving field view
CC	Removing burrs left by operation 10
3	Drilling pin and peep holes
AA	Removing burrs left by operation 3
4	Reaming pin and peep holes
5	Stamping index lines
BB	Removing burrs left by operation 4
9	Countersinking pin and peep holes and sighting notch
DD	Removing burrs left by operation 9
GG	Reaming burrs left by indexing and countersinking
13	Milling edges
EE	Removing burrs left by operation 13
11	Milling front end
12	Milling rear end
FF	Removing burrs left by operations 11 and 12
15	Filing, general cornering
16	Assembling with pin
17	Reaming peep hole
19	Bluing

OPERATION A. BLANKING

Transformation—Fig. 1632. Machine Used—Perkins No. 5, 1½-in. stroke, automatic rod feed. Number of Operators per Machine—One. Punches and Punch Holders—Square shank. Dies and Die Holders—Setscrew. Stripping Mechanism—Steel stripper curved to face of die. Average Life of Punches and Dies—20,000 pieces. Lubricant—Stock oil with cutting oil. Production—4000 pieces per hr.

OPERATION B. COLD DROPPING

Number of Operators—One. Description of Operation—Straightening after blanking. Apparatus and Equipment Used—Billings & Spencer 400-lb. drop hammer. Prod.—900 per hr.

OPERATION 14. HAND MILLING REAR END

Transformation—Fig. 1633. Machine Used—Garvin No. 3. Number of Operators per Machine—One. Work-Holding Devices—Held on mandrel and milled, 30 or 40 pieces at a time. Tool-Holding Devices—Standard arbor. Cutting Tools—Plain milling cutter. Number of Cuts—One. Cut Data—450 r.p.m.; hand feed. Coolant—Cutting oil, put on with brush. Average Life of Tool Between Grindings—25,000 pieces. Production—900 pieces per hr.

OPERATION 10. SHAVING FIELD VIEW

Transformation—Fig. 1634. Machine Used—Snow-Brooks No. 0 press. Number of Operators per Machine—One. Punches and Punch Holders—Held in round shank. Dies and Die Holders—Fixture screwed to bed, Fig. 1635. Stripping Mechanism—None. Average Life of Punches and Dies—10,000 pieces. Lubricant—Cutting oil, put on with brush. Gages—Fig. 1636, size and shape of hole. Production—350 pieces per hr. Note—Work held on pins clamped by jaws.

OPERATION 4. REAMING PIN AND PEEP HOLES

Machine Used—Sigourney Tool Co. three-spindle 10-in. upright. Number of Operators per Machine—One. Work-Holding Devices—Drill jig, same as Fig. 1638. Tool-Holding Devices—Drill chuck. Cutting Tools—Reamer. Number of Cuts—Two. Cut Data—1200 r.p.m.; hand feed. Coolant—Cutting oil, ⅛-in. stream. Average Life of Tool Between Grindings—200 pieces. Gages—Fig. 1639; sight is held on triangle while pins gage diameter and location of hole. Production—125 pieces per hr.

OPERATION 5. STAMPING INDEX LINES

Transformation—Fig. 1640. Number of Operators—One. Description of Operation—Rolling index lines. Apparatus and Equipment Used—Special machine on bench, Fig. 1641. Gages—Fig. 1642; locates slide on pins and gages location of lines. Production—600 pieces per hr.

FIG.1643

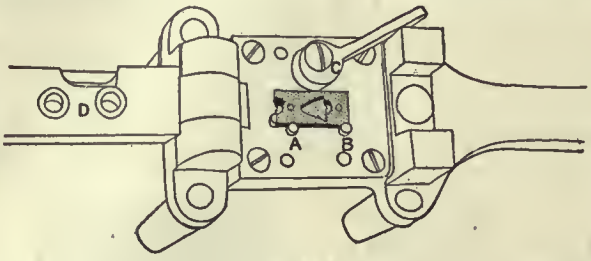

FIG.1644

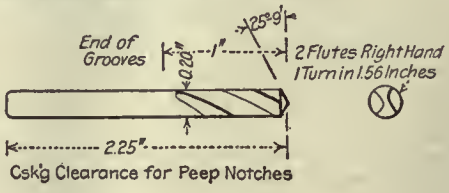

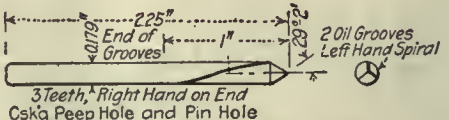

FIG.1645

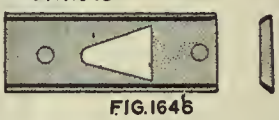
FIG.1646

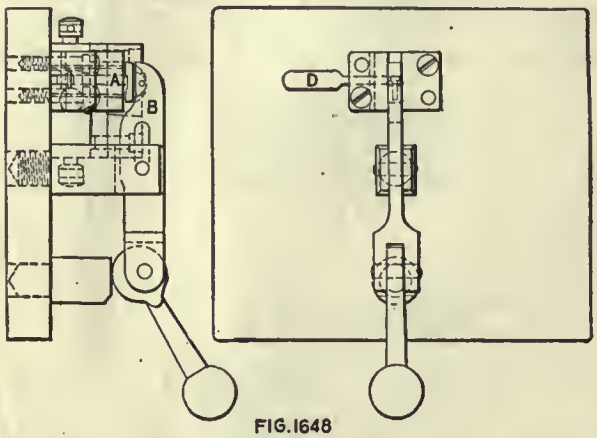

FIG.1648

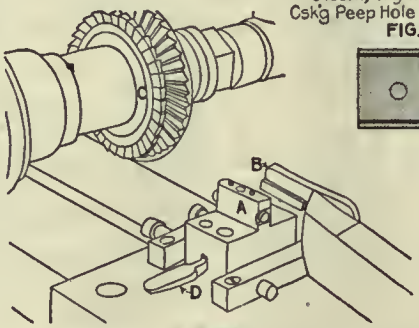

FIG.1647

FIG.1643,1644 & 1645 OPERATION 9
FIG.1646,1647,1648 & 1649 OP. 13
FIG.1650,1651,1652 & 1653 OP. 11 & 12

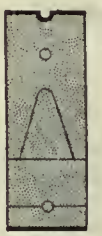
FIG.1650

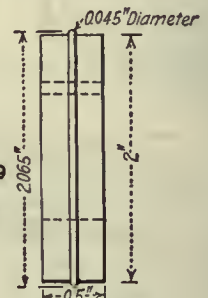

FIG.1652

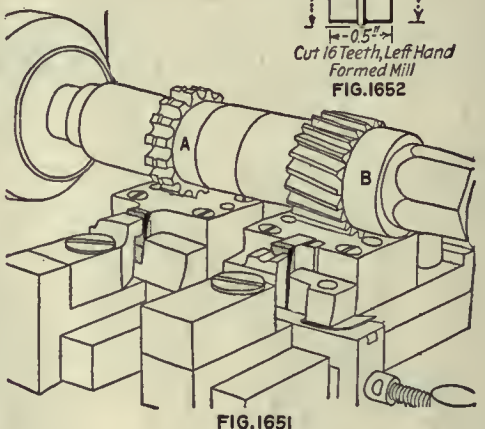

FIG.1651

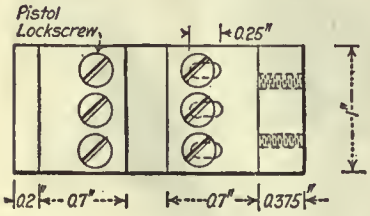

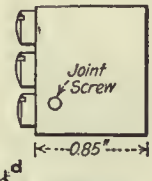

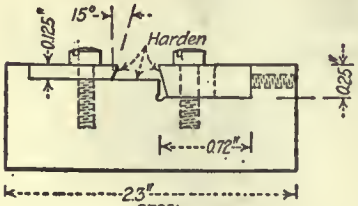

FIG. 1649

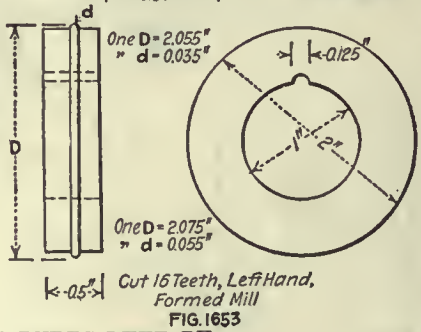

FIG.1653

OPERATION CC. REMOVING BURRS LEFT BY OPERATION 10

Number of Operators—One. Description of Operation—Removing burrs from operation 10. Apparatus and Equipment Used—File. Production—Grouped with operation 10.

OPERATION 3. DRILLING PIN AND PEEP HOLES

Transformation—Fig. 1637. Machine Used—Sigourney Tool Co. three-speed. Number of Operators per Machine—One. Work-Holding Devices—Drill jig, Fig. 1638; work wedged against pins at back by cam A. Tool-Holding Devices—Drill chuck. Cutting Tools—Twist drills. Number of Cuts—Two. Cut Data—1,200 r.p.m.; hand feed. Coolant—Cutting oil, ⅛-in. stream. Average Life of Tool Between Grindings—200 pieces. Gages—None. Production—80 pieces per hr.

OPERATION AA. REMOVING BURRS LEFT BY OPERATION 3

Number of Operators—One. Description of Operation—Removing burrs left by operation 3. Apparatus and Equipment Used—File. Production—Grouped with operation 3.

OPERATION BB. REMOVING BURRS LEFT BY OPERATION 4

Number of Operators—One. Description of Operation—Removing burrs from operation 4. Apparatus and Equipment Used—File. Production—Grouped with operation 5.

OPERATION 9. COUNTERSINKING PIN AND PEEP HOLES AND SIGHTING NOTCH

Transformation—Fig. 1643. Machine Used—Sigourney Tool Co. three-spindle 16-in. upright. Number of Operators per Machine—One. Work-Holding Devices—Drill jig, Fig. 1644; work is held against pins A and B by cam C; bushings are carried in leaf D. Tool-Holding Devices—Drill chuck. Cutting Tools—Countersink, Fig. 1645. Number of Cuts—Two. Cut Data—1,200 r.p.m.; hand feed. Coolant—Cutting oil, ⅛ in. stream. Average Life of Tool Between Grindings—200 pieces. Gages—None. Production—100 pieces per hr. Note—Sights are countersunk through holes in leaf of jig, then pin holes are trimmed out with leaf swung back.

OPERATION DD. REMOVING BURRS LEFT BY OPERATION 9

Number of Operators—One. Description of Operation—Removing burrs from operation 9. Apparatus and equipment Used—File. Production—Grouped with operation 9.

OPERATION GG. REAMING BURRS LEFT BY INDEXING AND COUNTERSINKING

Number of Operators—One. Description of Operation—Removing burrs from pin and peep holes. Apparatus and Equipment Used—Hand reamer. Production—Grouped with operation 9.

OPERATION 13. MILLING EDGES

Transformation—Fig. 1646. Machine Used—Whitney hand miller. Number of Operators per Machine—One. Work-Holding Devices—Located on pins, clamped by finger clamp, Fig. 1647; pins are shown at A, holding finger at B; mills C straddle work and mill both sides at once; lever D operates a knock-off; details in Fig. 1648. Tool-Holding Devices—Standard arbor. Cutting Tools—Side-cutting rivets to give 15-deg. angle to sides of slide. Number of Cuts—One. Cut Data—450 r.p.m.; hand feed. Coolant—Cutting oil, put on with brush. Average Life of Tool Between Grindings—5000 pieces. Gages—Fig. 1649, sides of dovetail. Production—120 pieces per hr. Note—This operation was formerly profiled.

OPERATION FF. REMOVING BURRS LEFT BY OPERATIONS 11 AND 12

Number of Operators—One. Description of Operation—Removing burrs from operations 11 and 12. Apparatus and Equipment Used—File. Production—Grouped with operations 11 and 12.

OPERATION 15. FILING, GENERAL CORNERING

Number of Operators—One. Description of Operation—Filing and cornering. Apparatus and Equipment Used—File Production—75 pieces per hr.

OPERATION 16. ASSEMBLING WITH PIN

Number of Operators—One. Description of Operation—Riveting in place. Apparatus and Equipment Used—Riveting hammer and block. Production—125 pieces per hr.

OPERATION 17. REAMING PEEP HOLE

Number of Operators—One. Description of Operation—Reaming peep hole. Apparatus and Equipment Used—Speed lathe and reamer. Fig. 1873. Production—1000 pieces per hr.

OPERATION 19. BLUING

Number of Operators—One. Description of Operation—Blue in niter at 800 deg. F. Apparatus and Equipment Used—Usual equipment.

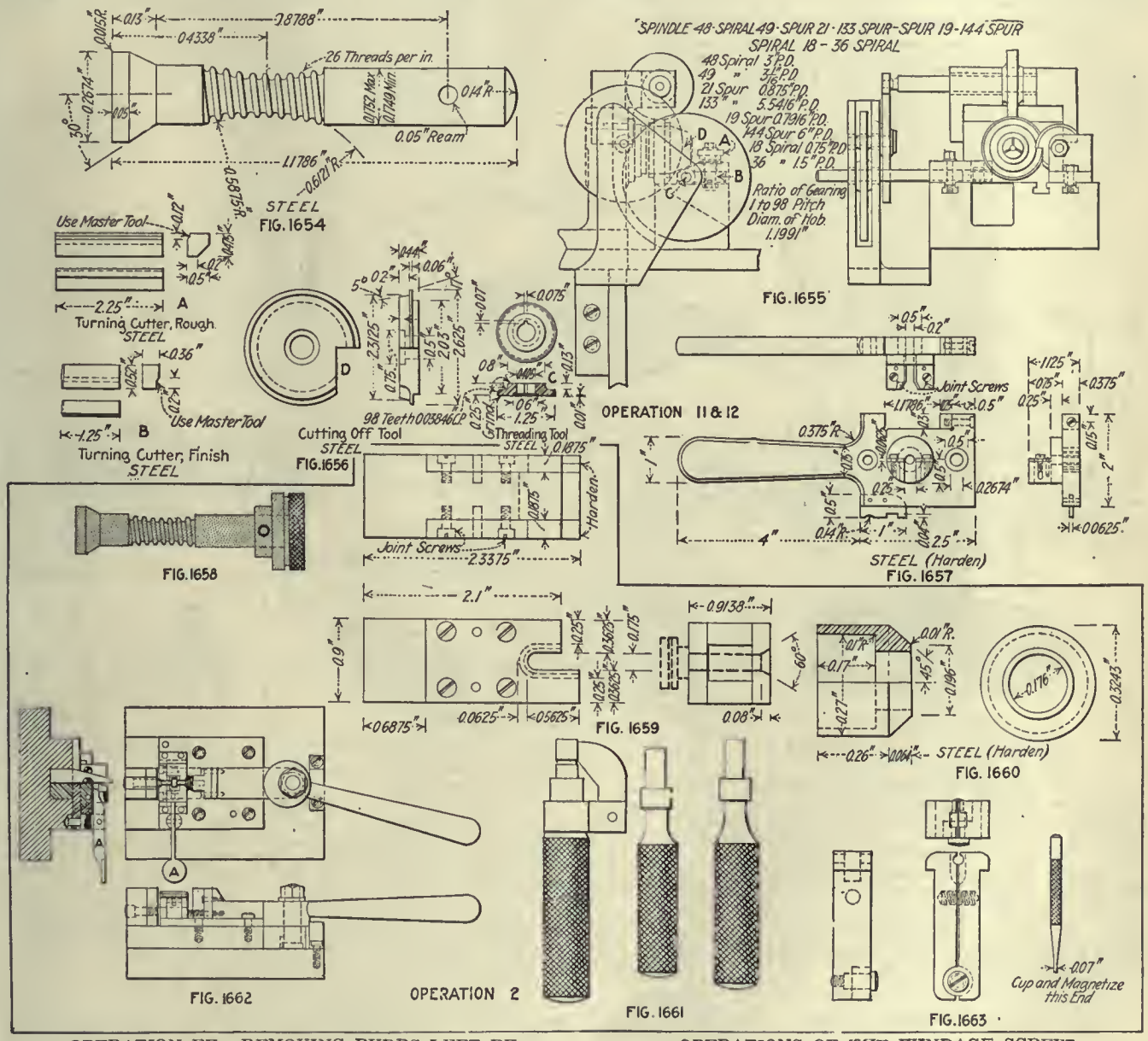

OPERATION EE. REMOVING BURRS LEFT BY OPERATION 13

Number of Operators—One. Description of Operation—Removing burrs thrown up by operation 13. Apparatus and Equipment Used—File. Production—Grouped with operation 13.

OPERATIONS 11 AND 12. MILLING FRONT AND REAR ENDS

Transformation—Fig. 1650. Machine Used—Standard No. 4½ universal. Number of Operators per Machine—One. Work-Holding Devices—Located on pins, clamped by vise jaws, Fig. 1651. Tool-Holding Devices—Standard arbor. Cutting Tools—Two milling cutters, Fig. 1652, for upper and for lower end; a special cutter is shown in Fig. 1653. Number of Cuts—One. Cut Data—450 r.p.m.; hand feed. Coolant—None. Average Life of Tool Between Grindings—5000 pieces. Gages—None. Production—120 pieces per hr.

OPERATIONS OF THE WINDAGE SCREW

Operation

1 Automatic
2 Drilling knob and screw
7 Windage screw collar on automatic
3 Pinning
4 Polishing
5 Bluing
6 Filing

OPERATION 1. AUTOMATIC

Machine Used—Pratt & Whitney automatic with special hobbing attachment. Number of Machines per Operator—Four. Work-Holding Devices—Held in draw-in chuck. Tool-Holding Devices—Turret of machine. Cutting Tools—Hobbing attachment, Fig. 1655; hob A is revolved by

worm and worm gear B and C, while screw is supported by back rest D; other tools in Fig. 1656; A and B, turning tools; C, hob; D, circular cutoff tool. Number of Cuts—Four. Cut Data—700 r.p.m.; 3/8-in. feed. Coolant—Cutting oil, 3/8-in. stream. Average Life of Tool Between Grindings—2000 pieces. Gages—Fig. 1657, length, diameter of body and head, rounded end, etc. Production—40 pieces per hr.

OPERATION 2. DRILLING KNOB AND SCREW

Transformation—Fig. 1658. Machine Used—Any drilling machine. Number of Operators per Machine—One. Work-Holding Devices—Drill jig, inch V-blocks. Tool-Holding Devices—Drill chuck. Cutting Tools—Twist drills. Cut Data—900 r.p.m.; hand feed. Coolant—Cutting oil, 1/8-in. stream. Average Life of Tool Between Grindings—150 pieces. Gages—Fig. 1659, distance between collar and knob. Production—60 pieces per hr.

OPERATION 1. AUTOMATIC

Transformation—See Fig. 1882. Machine Used—Cleveland 3/8-in. automatic. Number of Machines per Operator—Four. Work-Holding Devices—Held in draw-in chuck. Tool-Holding Devices—Turret of machine. Cutting Tools—Regular layout. Number of Cuts—Four. Cut Data—900 r.p.m.; 1/16-in. feed. Coolant—Cutting oil, 3/8-in. stream. Average Life of Tool Between Grindings—1500 pieces. Gages—Fig. 1661. Production—60 pieces per hr.

OPERATION 3. ASSEMBLING AND PINNING KNOB

Transformation—See assembled rear sight in Fig. 1427. Number of Operators—One. Description of Operation—Pinning and assembling collar spring and knob, using the vise shown in Fig. 1662 for compressing spring and holding while driving the pin; lever A forces the assembled piece out of the vise. Apparatus and Equipment Used—Special vise, Fig. 1662; holder and set, Fig. 1663; the set is magnetized to pick up pin, and the end is cupped. Production—125 per hr.

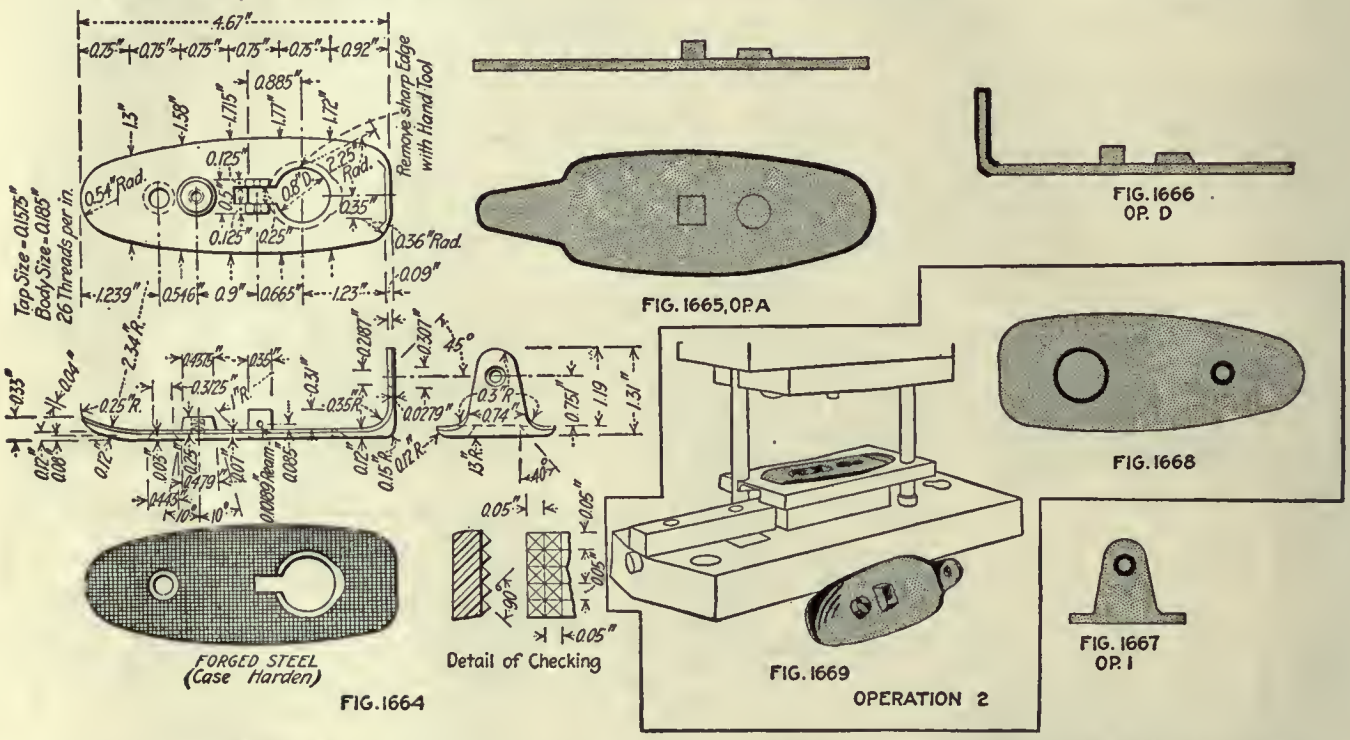

OPERATION 4. POLISHING

Number of Operators—One. Description of Operation—Polishing end of knob. Apparatus and Equipment Used—Polishing jack and wheel. Production—900 pieces per hr.

OPERATION 5. BLUING

Number of Operators—One. Description of Operation—Blue in niter at 800 deg. F. Apparatus and Equipment Used—Usual equipment.

OPERATION 6. FILING

Number of Operators—One. Description of Operation—Filing burrs. Apparatus and Equipment Used—File held in hand. Production—250 per hr.

Butt Plate

The butt plate, Fig. 1664, is made of Class D steel, of 0.88x0.48-in. rectangular section. The service of the butt plate is very severe, as the rifle is dropped several inches to the ground in many drill evolutions. It must protect the end of the gun stock from local stresses and shocks which would splinter it unless effectually covered in this way. The butt plate is checked by milling it in two directions, so as to prevent its slipping when in position against a man's shoulder.

OPERATIONS ON THE BUTT PLATE

Operation	
A	Blocking from bar and hot trimming
A-1	Pickling
B	Dropping
B-1	Pickling
C	Trimming
D	Dropping and bending tang
F	Annealing
F-1	Pickling
G	Cold dropping
1	Punching screw holes in tang
2	Punching screw and thong-case holes
3	Milling edges of tang
4½	Burring operations 2, 3 and 4 (5, 12, 12½, 11 grouped)
5	Milling top of plate, top and sides of hinge lug and top of spring-screw boss crosswise
6	Hand-milling both sides and slot in hinge lug lengthwise
7-B	Drilling for spring screw
10	Counterboring screw holes in plate and tang
11	Milling surface of tang lengthwise
7	Drilling pin hole in hinge lugs
14	Hand-milling thumb notch
9	Hand-milling slot in plate for tang of cap
17	Filing hinge lugs and spring-screw boss and fitting
18	Assembling butt plate with butt-plate cap
18½	Straightening and burring
12	Checking bottom of plate lengthwise
12½	Checking bottom of plate crosswise
13	Tapping spring-screw hole
8	Beveling edges of thong-case hole
19	Polishing
20	Assembling butt-plate cap spring to butt plate
20-A	Countersinking
21	Casehardening

OPERATION A. BLOCKING FROM BAR AND HOT TRIMMING

Transformation—Fig. 1665. Number of Operators—One. Description of Operation—Shaping from bar. Apparatus and Equipment Used—Billings & Spencer 800-lb. drop hammer. Production—100 pieces per hr. Note—Trimmed in old Bliss press, 3-in. stroke.

OPERATION A-1. PICKLING

Number of Operators—One. Description of Operation—Put in wire baskets and placed in the pickling solution, 1 part sulphuric acid and 9 parts water, and left in this from 10 to 12 min. Apparatus and Equipment Used—Wire baskets, wooden pickling tanks and hand hoist.

OPERATION B. DROPPING

Number of Operators—One. Description of Operation—Same as operation A. Apparatus and Equipment Used—Same as operation A. Production—125 pieces per hr. Note—In this operation the tang is left straight; the plate is heated for this.

OPERATION B-1. PICKLING

Number of Operators—One. Description of Operation—Same as previous pickling.

OPERATION C. TRIMMING

Machine Used—Perkins press, 1½-in. stroke. Number of Operators per Machine—One. Punches and Punch Holders—Square shank. Dies and Die Holders—In shoe, by setscrew. Stripping Mechanism—Pushed through die. Average Life of Punches and Dies—15,000 pieces. Lubricant—None. Gages—None. Production—500 pieces per hr.

OPERATION D. DROPPING AND BENDING TANG

Transformation—Fig. 1666. Number of Operators—One. Description of Operation—Heating and bending tang. Appar-

atus and Equipment Used—Billings & Spencer 400-lb. drop hammer. Production—130 pieces per hr.

OPERATION F. ANNEALING

Number of Operators—One. Description of Operation—Placed in iron pots with powdered charcoal, heated to 850 deg. C. (1562 deg. F.), left over night to cool. Apparatus and Equipment Used—Iron pots, Brown & Sharpe annealing furnace, oil burners, powdered charcoal.

OPERATION F-1. PICKLING

Number of Operators—One. Description of Operation—Same as previous pickling.

OPERATION G. COLD DROPPING

Number of Operators—One. Description of Operation—Straightening to shape. Apparatus and Equipment Used—Billings & Spencer 400-lb. drop hammer. Production—500 pieces per hr.

OPERATION 1. PUNCHING SCREW HOLES IN TANG

Transformation—Fig. 1667. Machine Used—Garvin No. 1, with 1½-in. stroke. Number of Operators per Machine—One. Punches and Punch Holders—Round shank. Dies and Die Holders—Screwed to plate bolted to bed of press. Stripping Mechanism—Steel stripper screwed to face of die. Average Life of Punches and Dies—10,000 pieces. Gages—See Fig. 1673. Production—700 pieces per hr. Note—Speed, 120 strokes per min.

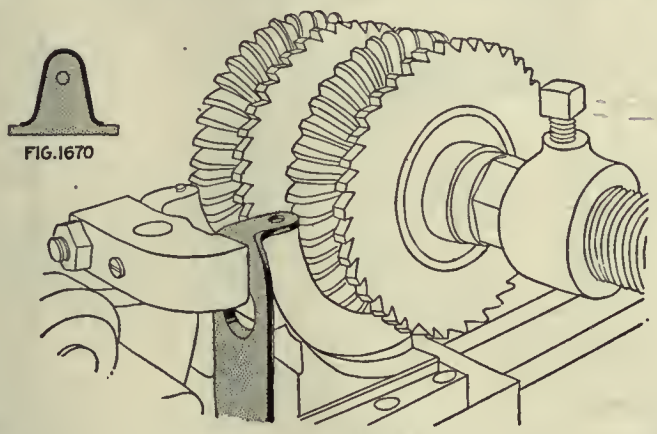

FIG. 1670

FIG. 1671

OPERATION 5. MILLING TOP OF PLATE, TOP AND SIDES OF HINGE LUG AND TOP OF SPRING-SCREW BOSS CROSSWISE

Transformation—Fig. 1674. Machine Used—Pratt & Whitney No. 2 Lincoln miller. Number of Machines per Operator—Five. Work-Holding Devices—Located on pin A, clamped with vise jaws, Fig. 1675. Tool-Holding Devices—Standard arbor. Cutting Tools—Milling cutters, Fig. 1676. Number of Cuts—One. Cut Data—60 r.p.m.; ⅝-in. feed. Coolant—Cutting oil, put on with brush. Average Life of Tool Between Grindings—5000 pieces. Gages—Work gage and inspecting-room gage for tang, etc. Production—35 pieces per hr.

OPERATION 6. HAND-MILLING BOTH SIDES AND SLOT IN HINGE LUG LENGTHWISE

Transformation—Fig. 1677. Machine Used—Reed hand miller. Number of Operators per Machine—One. Work-Holding Devices—Located on pin, clamped from sides, similar to Fig. 1675. Tool-Holding Devices—Standard arbor. Cutting Tools—Gang of three milling cutters, 1.625 in. in diameter, 0.25 and 0.375 in. wide, spaced as shown. Number of Cuts—One. Cut Data—200 r.p.m.; hand feed. Coolant—Cutting oil, put on with brush. Average Life of Tool Between Grindings—5000 pieces. Gages—Fig. 1678. Production—125 pieces per hr. Note—Same fixture as operation 9.

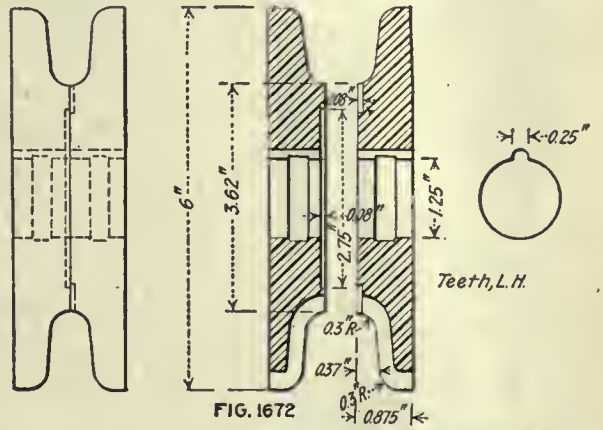

FIG. 1672

OPERATION 3

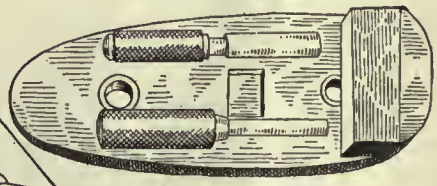

FIG. 1673

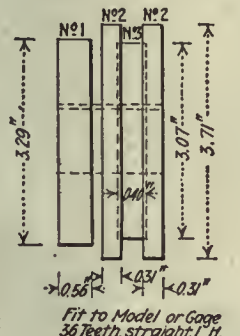

FIG. 1676

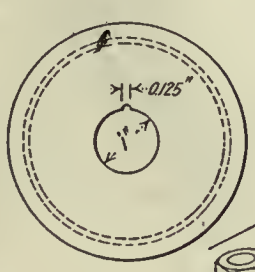

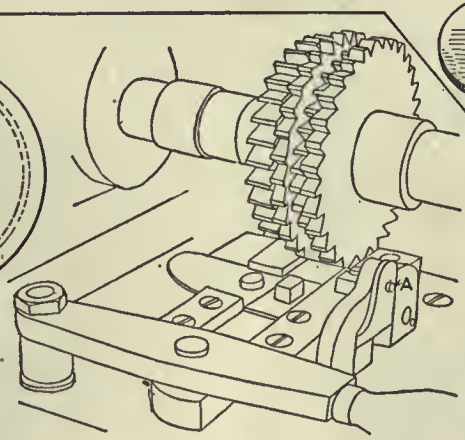

OPERATION 5

FIG. 1675

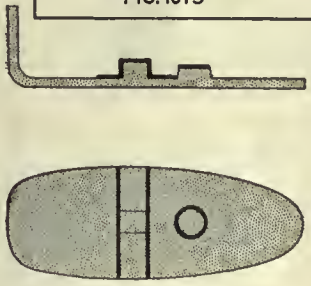

FIG. 1674

OPERATION 2. PUNCHING THONG-CASE HOLES

Transformation—Fig. 1668. Machine Used—Bliss No. 21 back-geared press. Number of Operators per Machine—One. Punches and Punch Holders—Square shank, Fig. 1669; punch screwed to plate, plate bolted to bed of press. Dies and Die Holders—Die screwed to punch holder; trims the outside of butt plate. Stripping Mechanism—Plates are forced out of die and punch holder by pins, which are controlled by guide pins on the side of the die; these pins project down through the shoe with nuts and washers on the bottom end; as the press goes back into position, these pins force the plate down out of the die. Average Life of Punches and Dies—10,000 pieces. Lubricant—Punches oiled with cutting oil. Gages—Plug, for diameter. Production—300 pieces per hr.

OPERATION 3. MILLING EDGES OF TANG

Transformation—Fig. 1670. Machine Used—Pratt & Whitney No. 3 Lincoln miller. Number of Machines per Operator—Five. Work-Holding Devices—Work located on pin, clamped with finger clamps, Fig. 1671. Tool-Holding Devices—Standard arbor. Cutting Tools—Pair of formed cutters, Fig. 1672. Number of Cuts—One. Cut Data—60 r.p.m.; ⅝-in. feed. Coolant—Cutting oil, put on with brush. Average Life of Tool Between Grindings—5000 pieces. Gages—Fig. 1673, form of tang and holes. Production—25 pieces per hr.

OPERATION 4½. BURRING OPERATIONS 2, 3 AND 4

Number of Operators—One. Description of Operation—Removing burrs from operations 2, 3 and 4. Apparatus and Equipment Used—File. Production—Grouped with 5 and 12.

OPERATION 7-B. DRILLING FOR SPRING SCREW

Transformation—Fig. 1679. Machine Used—Dwight-Slate 16-in. upright drilling machine. Number of Operators per Machine—One. Work-Holding Devices—Drill jig of types previously shown. Tool-Holding Devices—Drill chuck. Cutting Tools—Twist drill for 0.1575-in. tap, 26 threads per inch. Number of Cuts—One. Cut Data—750 r.p.m.; hand feed. Coolant—Cutting oil, ⅛-in. stream. Average Life of Tool Between Grindings—300 pieces. Gages—None. Production—125 pieces per hr.

OPERATION 10. COUNTERBORING SCREW HOLES IN PLATE AND TANG

Transformation—Fig. 1680. Machine Used—Ames two-spindle 16-in. upright. Number of Operators per Machine—One. Work-Holding Devices—Held in block, Fig. 1681, with hole in block to allow for counterbore; stop screwed to plate to hold work from swinging; block A counterbores tang, B the other hole. Tool-Holding Devices—Taper shank. Cutting Tools—Counterbores, for each hole. Number of Cuts—Two. Cut Data—250 r.p.m.; hand feed. Coolant—Cutting oil, ⅛-in. stream. Average Life of Tool Between Grindings—500 pieces. Gages—Fig. 1682, double-ended bevel. Production—120 pieces per hr.

OPERATION 11. MILLING SURFACE OF TANG LENGTHWISE

Transformation—Fig. 1683. Machine Used—Pratt & Whitney No. 2 Lincoln miller. Number of Machines per Operator—Five. Work-Holding Devices—Work held upright, located on

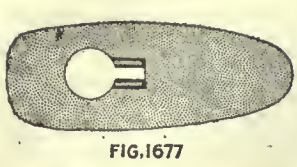

FIG. 1677

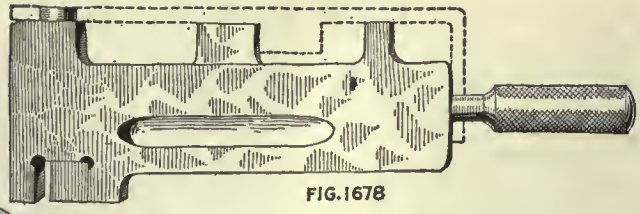

FIG. 1678

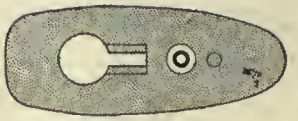

FIG. 1679

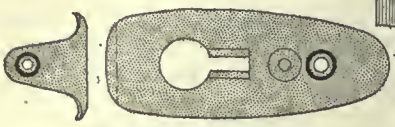

FIG. 1680

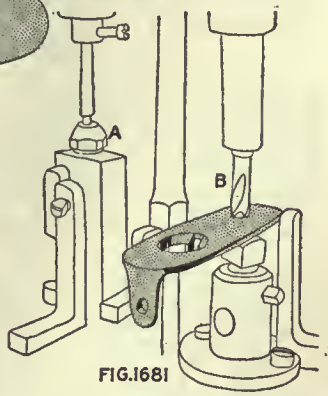

FIG. 1681

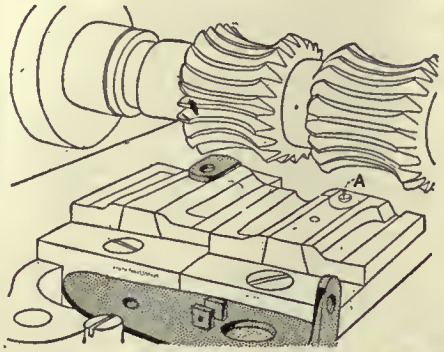

FIG. 1684

FIG. 1686

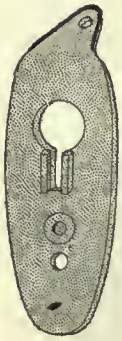

FIG. 1683

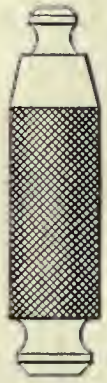

FIG. 1682

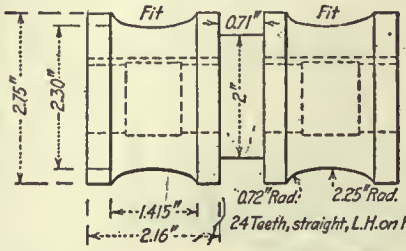

FIG. 1685

FIG. 1677, 1678 OP. 6
FIG. 1679 OP. 7B
FIG. 1680, 1681, 1682 OP. 10
FIG. 1683, 1684, 1685, 1686 OP. 11

pin A, clamped by jaws, Fig. 1684. Tool-Holding Devices—Standard arbor. Cutting Tools—Milling cutters, Fig. 1685. Number of Cuts—One. Cut Data—60 r.p.m.; ⅝-in. feed. Coolant—Cutting oil, put on with brush. Average Life of Tool Between Grindings—5000 pieces. Gages—Fig. 1686, contour and thickness of tang. Production—50 pieces per hr.

OPERATION 8. BEVELING EDGES OF THONG-CASE HOLE

Transformation—Fig. 1687. Machine Used—Ames three-spindle 16-in. upright. Number of Operators per Machine—One. Work-Holding Devices—Drill jig, Fig. 1688. Tool-Holding Devices—Taper shank. Cutting Tools—Counterbore with pilot. Number of Cuts—One. Cut Data—250 r.p.m.; hand feed. Coolant—Cutting oil, ⅛-in. stream. Average Life of Tool Between Grindings—5000 pieces. Gages—Fig. 1689; two plugs, "go" and "not go"; plate is put over plug and straight-edge A used on the inside, also a workman's bevel plug gage. Production—120 pieces per hr.

OPERATION 7. DRILLING PIN HOLE IN HINGE LUGS

Transformation—Fig. 1690. Machine Used—Sigourney Tool Co. 16-in. three-spindle drilling machine. Number of Operators per Machine—One. Work-Holding Devices—Drill jig, Fig. 1691. Cutting Tools—Twist drill. Cut Data—750 r.p.m.; hand feed. Coolant—Cutting oil, ⅛-in. stream. Average Life of Tool Between Grindings—250 pieces. Gages—Plug for diameter and a location gage. Production—90 per hr.

OPERATION 14. HAND-MILLING THUMB NOTCH

Transformation—Fig. 1692. Machine Used—Garvin No. 2 hand miller. Number of Operators per Machine—One. Work-Holding Devices—Held on pin by screw clamp B, Fig. 1693. Tool-Holding Devices—Taper shank. Cutting Tools—No. 4 taper-shank milling cutter, 1.03 in. in diameter by 0.75 in. wide; 12 left-hand teeth. Number of Cuts—One. Cut Data—250 r.p.m.; hand feed. Coolant—Cutting oil. Gages—Fig. 1694, angle of thumb notch. Production—350 per hr.

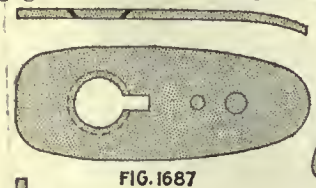

FIG. 1687

FIG. 1690

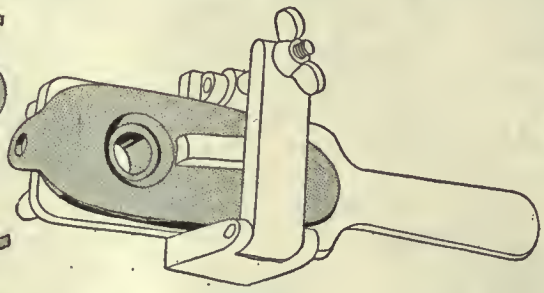

FIG. 1688

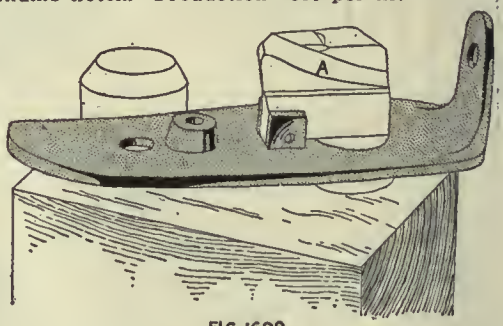

FIG. 1689

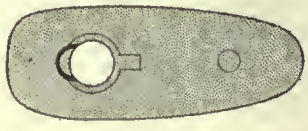

FIG. 1692

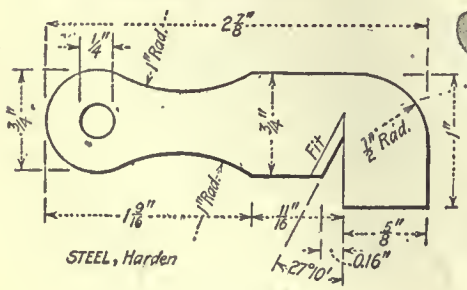

FIG. 1694

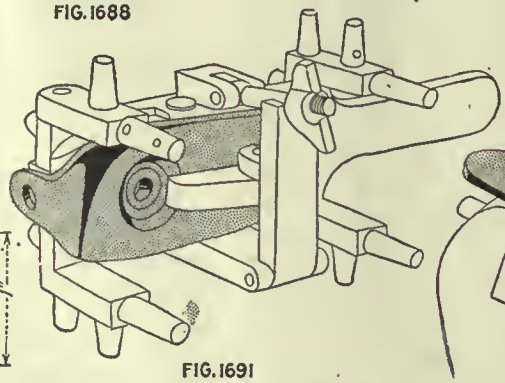

FIG. 1691

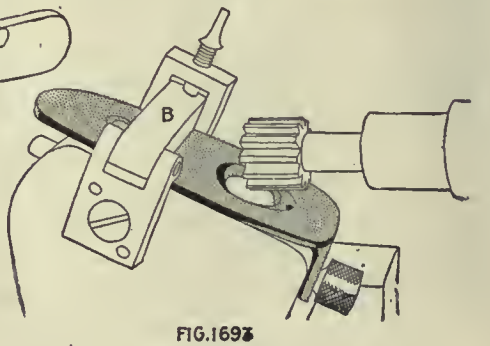

FIG. 1693

FIG. 1687, 1688 & 1689 OPERATION 8
FIG. 1690 & 1691 OPERATION 7
FIG. 1692, 1693 & 1694 OPERATION 14

The butt-plate cap is another part which seems to be made more expensively than necessary. This simply covers the opening in the stock which holds the thong or oiler and is not subjected to any special stress requiring a drop forging. It seems to be a case where either sheet metal or a die casting would answer the requirements admirably. With a die casting the pin hole could be east in place and the piece assembled without any machining whatever.

Both the butt-plate and the cap present rather difficult problems for holding the work. The way in which this is accomplished is shown in Figs. 1704, 1707, 1712 and 1718. The thinness of the plate and cap add to the difficulty but the fixtures indicate how the work is held.

OPERATION 9. HAND-MILLING SLOT IN PLATE

Transformation—Fig. 1695. Machine Used—Garvin No. 3 hand miller. Number of Operators per Machine—One. Work-Holding Devices—Held on pin A, clamped on sides, Fig. 1696. Tool-Holding Devices—Standard arbor. Cutting Tools—Milling cutter, 2 in. in diameter, 0.251 in. wide. Number of Cuts—One. Cut Data—150 r.p.m.; hand feed. Coolant—Compound, ⅛-in. stream. Average Life of Tool Between Grindings—5000 pieces. Gages—Fig. 1697; gage is put in place with pin to see fit. Production—325 pieces per hr.

OPERATION 17. FILING HINGE LUGS AND SPRING-SCREW BOSS AND FITTING

Number of Operators—One. Description of Operation—Filing lugs and spring-screw boss, also reaming pin hole. Apparatus and Equipment Used—File and four-fluted reamer, 0.10189 in. Production—45 pieces per hr.

OPERATION 18. ASSEMBLING BUTT PLATE WITH BUTT-PLATE CAP

Number of Operators—One. Description of Operation—Assembling butt plate and cap. Apparatus and Equipment Used—Hammer. Production—70 pieces per hr.

OPERATION 18½. STRAIGHTENING AND BURRING

Number of Operators—One. Description of Operation—Straightening, if needed, and burring. Apparatus and Equipment Used—File and lead block, brass hammer. Production—70 pieces per hr.

OPERATION 12. CHECKING BOTTOM OF PLATE LENGTHWISE

Transformation—Fig. 1698. Machine Used—Pratt & Whitney No. 2 Lincoln miller. Number of Machines per Operator—Five. Work-Holding Devices—Located on pin, clamped on tang, Fig. 1699; bridge-milling fixture in Fig. 1700; this pivots at A and has a hardened-steel shoe at B, which rides on the block C as table moves forward; work is held by pin in tang-

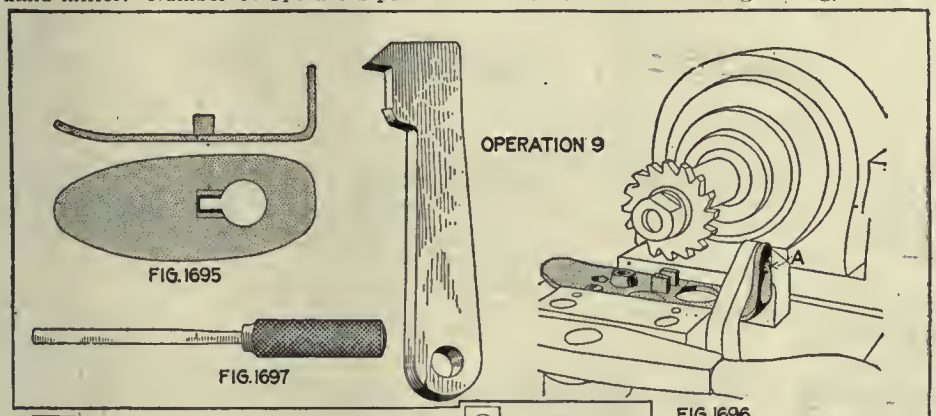

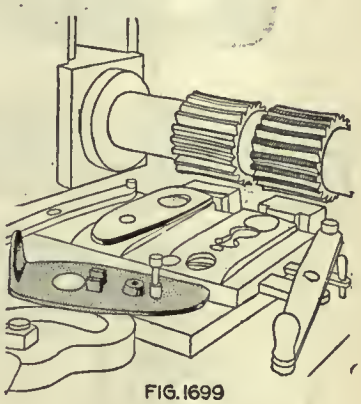

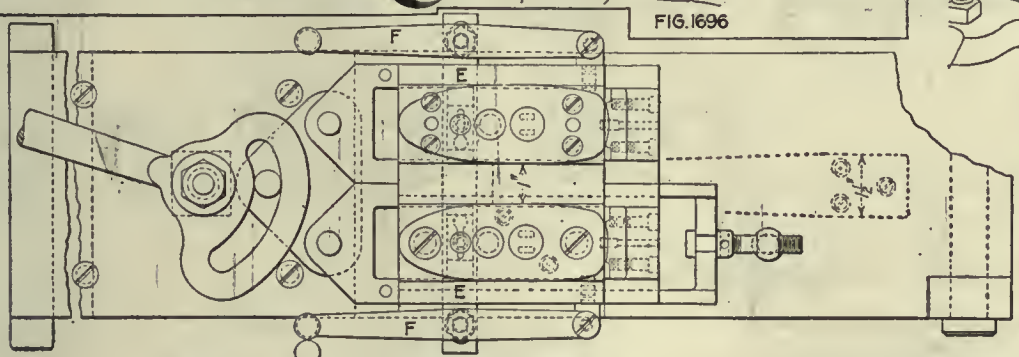

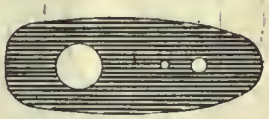

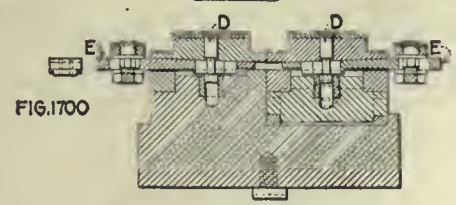

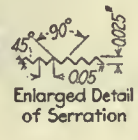

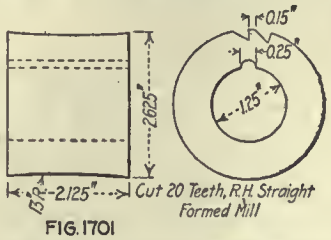

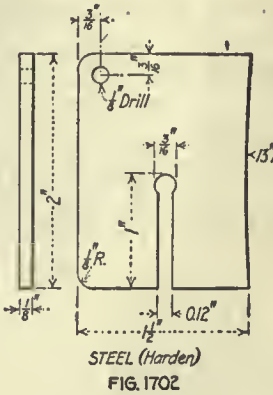

screw hole and by studs DD, which are pulled down by slides EE, moved by levers FF. Tool-Holding Devices—Standard arbor. Cutting Tools—Formed milling cutter, Fig. 1701. Number of Cuts—One. Cut Data—60 r.p.m.; ⅝-in. feed. Coolant—Compound, two ¼-in. streams. Average Life of Tool Between Grindings—8000 pieces. Gages—Thickness, Fig. 1702. Production—25 pieces per hr.

OPERATION 12½. CROSS-CHECKING BOTTOM OF PLATE

Transformation—Fig. 1703. Machine Used—Pratt & Whitney No. 2 Lincoln miller. Number of Machines per Operator—Five. Work-Holding Devices—Held on pin clamped by vise jaws; jaws on formed elevating fixture, Fig. 1704. Tool-Holding Devices—Standard arbor. Cutting Tools—Pair of formed, sectional cutters, Fig. 1705. Number of Cuts—One. Cut Data—60 r.p.m.; ⅝-in. feed. Coolant—Compound, two ¼-in. streams. Average Life of Tool Between Grindings—8000 pieces. Gages—None. Production—25 pieces per hr.

OPERATION 13. TAPPING SPRING-SCREW HOLE

Transformation—Fig. 1706. Number of Operators—One. Description of Operation—Tapping spring-screw holes. Apparatus and Equipment Used—Tapping fixture with hand-wheel on spindle, work held in vise, Fig. 1707; details in Fig. 1708; tap with three right-hand spiral flutes, diameter 0.185 in., 26 threads per in. Gages—Plug thread. Prod.—125 per hr.

OPERATION 19. POLISHING

Number of Operators—One. Description of Operation—Polishing tang and edges. Apparatus and Equipment Used—Polishing jack and wheel. Production—35 pieces per hr.

1	Milling tang to thickness (1½ and 2½ grouped for 750)
1½	Burring tang and match bevel
2	Drilling and reaming pin hole
2½	Countersinking pin hole
4	Milling top crosswise
5	Filing and fitting tang of bevel
7	Grinding corner of tang for spring
8	Assembling to butt plate
9	Checking separate caps

OPERATION A. FORGING FROM BAR

Transformation—Fig. 1710. Number of Operators—One. Description of Operation—Shaping from bar. Apparatus and Equipment Used—Billings & Spencer 400-lb. drop hammer. Production—175 pieces per hr.

OPERATION B. ANNEALING

Number of Operators—One. Description of Operation—Placed in iron pots and packed with powdered charcoal, heated to 850 deg. C. (1562 deg. F.) and left over night to cool. Apparatus and Equipment Used—Brown & Sharpe annealing furnace, oil burner, powdered charcoal.

OPERATION B-1. PICKLING

Number of Operators—One. Description of Operation—Placed in wire baskets and put in the pickling solution (1 part sulphuric acid to 9 parts water) and left in this for from 10 to 12 min. Apparatus and Equipment Used—Wire baskets, wooden pickling tanks and hand hoist.

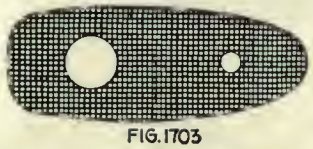

FIG. 1703

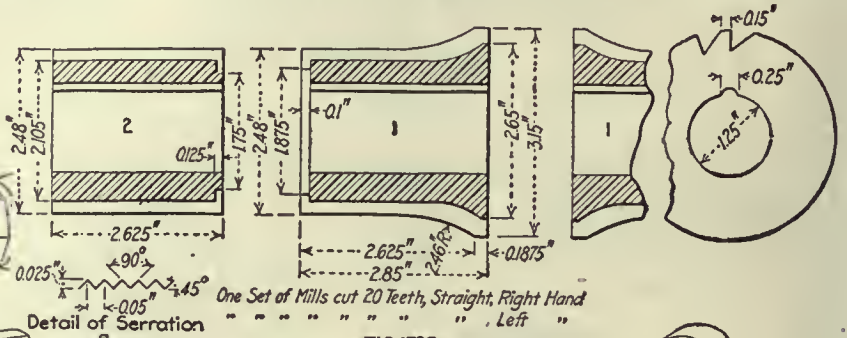

FIG. 1705

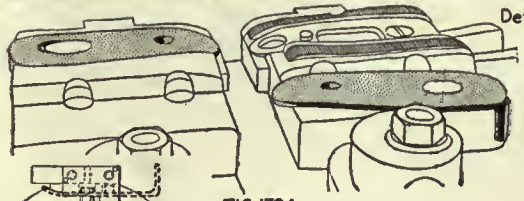

FIG. 1704

FIG. 1706

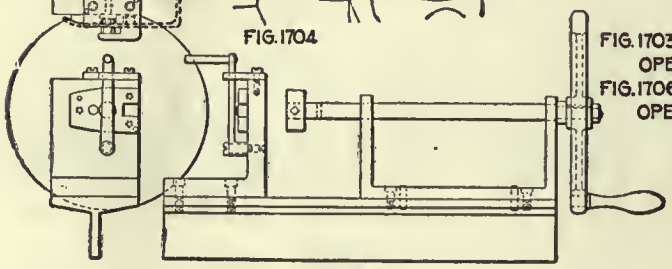

FIG. 1708

FIG. 1703, 1704, 1705 OPERATION 12½
FIG. 1706, 1707, 1708 OPERATION 13

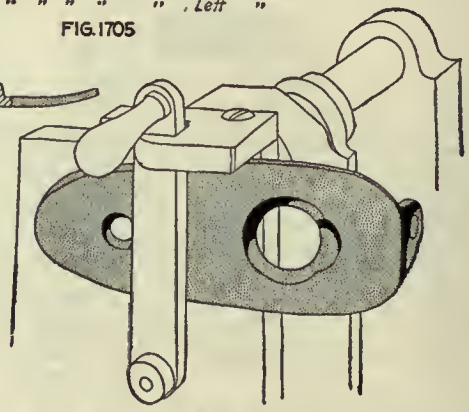

FIG. 1707

OPERATION 20. ASSEMBLING BUTT-PLATE CAP SPRING TO BUTT PLATE

Number of Operators—One. Description of Operation—Assembling cap spring. Apparatus and Equipment Used—Hands. Production—125 pieces per hr.

OPERATION 20-A. COUNTERSINKING

Number of Operators—One. Description of Operation—Countersinking screw holes. Apparatus and Equipment Used—Speed lathe and countersink. Production—700 pieces per hr.

OPERATION 21. CASEHARDENING

Number of Operators—One. Description of Operation—Pack in ½ bone, ½ leather; heat to 750 deg. C. (1382 deg. F.) for 2½ hr.; quench in oil.

Butt-Plate Cap

The butt-plate caps, Fig. 1709, are finish forged on the bevels by a second cold dropping and require no machining on this surface. The operations given do not include the checking of the caps on the outside, as this is done with the butt plate after assembling. It is sometimes necessary to make the caps separately, and in that case they are checked in a special fixture which holds them separately.

OPERATIONS ON THE BUTT-PLATE CAP

Operation	
A	Forging from bar
B	Annealing
B-1	Pickling
C	Trimming
D	Cold dropping

OPERATION C. TRIMMING

Machine Used—Snow-Brooks No. 1; 1½-in. stroke. Number of Operators per Machine—One. Punches and Punch Holders—Round shank. Dies and Die Holders—Held in shoe by setscrew. Stripping Mechanism—Pushed down through die. Average Life of Punches—15,000 pieces. Dies—Same. Gages—None. Production—600 pieces per hr.

OPERATION D. COLD DROPPING

Number of Operators—One. Description of Operation—Straightening after trimming. Apparatus and Equipment Used—Billings & Spencer 400-lb. drop hammer. Production—900 pieces per hr.

OPERATION 1. MILLING TANG TO THICKNESS

Transformation—Fig. 1711. Machine Used—Pratt & Whitney No. 2 Lincoln miller. Number of Machines per Operator—Four. Work-Holding Devices—Held upright, clamped by finger clamp, Fig. 1712. Tool-Holding Devices—Standard arbor. Cutting Tools—Milling cutters, Fig. 1713. Number of Cuts—One. Cut Data—70 r.p.m.; ⅝-in. feed. Coolant—Cutting oil. Average Life of Tool Between Grindings—5000 pieces. Gages—Thickness of tang. Production—50 per hr. per machine.

OPERATION 1½. BURRING TANG TO MATCH BEVEL

Number of Operators—One. Description of Operation—Matching bevel with tang and burring. Apparatus and Equipment Used—File. Production—350 pieces per hr.

OPERATION 2. DRILLING AND REAMING PIN HOLE

Transformation—Fig. 1714. Machine Used—Pratt & Whitney 16-in. two-spindle upright drilling machine. Number of Operators per Machine—One. Work-Holding Devices—Drill jig, Fig. 1715; a cap is shown at A and in position, as at B; leaf C, with bushing, is swung up into position for drilling through side. Tool-Holding Devices—Drill chuck. Cutting Tools—Twist drill and reamer, 0.10239 in. in diameter; four straight flutes, 1.3 in. long. Number of Cuts—One. Cut Data—750 r.p.m.; hand feed. Coolant—Cutting oil. Average Life of Tool Between Grindings—250 pieces. Gages—Fig. 1716.

OPERATION 2½. COUNTERSINKING PIN HOLE

Number of Operators—One. Description of Operation—Countersinking pin hole on both sides. Apparatus and Equipment Used—Bench lathe and countersink. Production—350 pieces per hr.

OPERATION 4. MILLING TOP CROSSWISE

Transformation—Fig. 1717. Machine Used—Pratt & Whitney No. 2 Lincoln miller. Number of Machines per Operator—Four. Work-Holding Devices—Held on pin, clamped by vise jaws, Fig. 1718. Tool-Holding Devices—Standard arbor. Cutting Tools—Milling cutters, Fig. 1719. Number of Cuts—One. Cut Data—70 r.p.m.; ⅝-in. feed. Coolant—Cutting oil, put on with brush. Average Life of Tool Between Grindings—5000 pieces. Gages—Thickness and height of lug. Production—50 per hr. per machine.

OPERATION 5. FILING AND FITTING TANG FOR SPRING

Number of Operators—One. Description of Operation—Filing and fitting tang for spring. Apparatus and Equipment Used—File. Production—45 pieces per hr.

Upper Band

The upper band, Fig. 1720, is a drop forging of Class E steel, 1.4 in. round, and is forged on a formed mandrel to give the correct size and shape. This band holds the front end of the stock and of the hand guard together, with the barrel between. It also carries the lug that holds the lower end of the bayonet.

This piece requires considerable forging, owing to the irregular or nonsymmetric shape of the interior where it fits around the gun stock and the hand guard with the barrel between. The irregular interior is secured by first drilling a round hole and then swaging, or "mandreling," as it is called at the Water shops, using a series of mandrels to secure the desired shape. It is necessary for this band to have considerable strength, not only on account of its holding the rifle together at the front, but because it acts as the support of the bayonet. The bayonet lug at the front of the band on the lower side is subjected to considerable strain and is casehardened to resist wear.

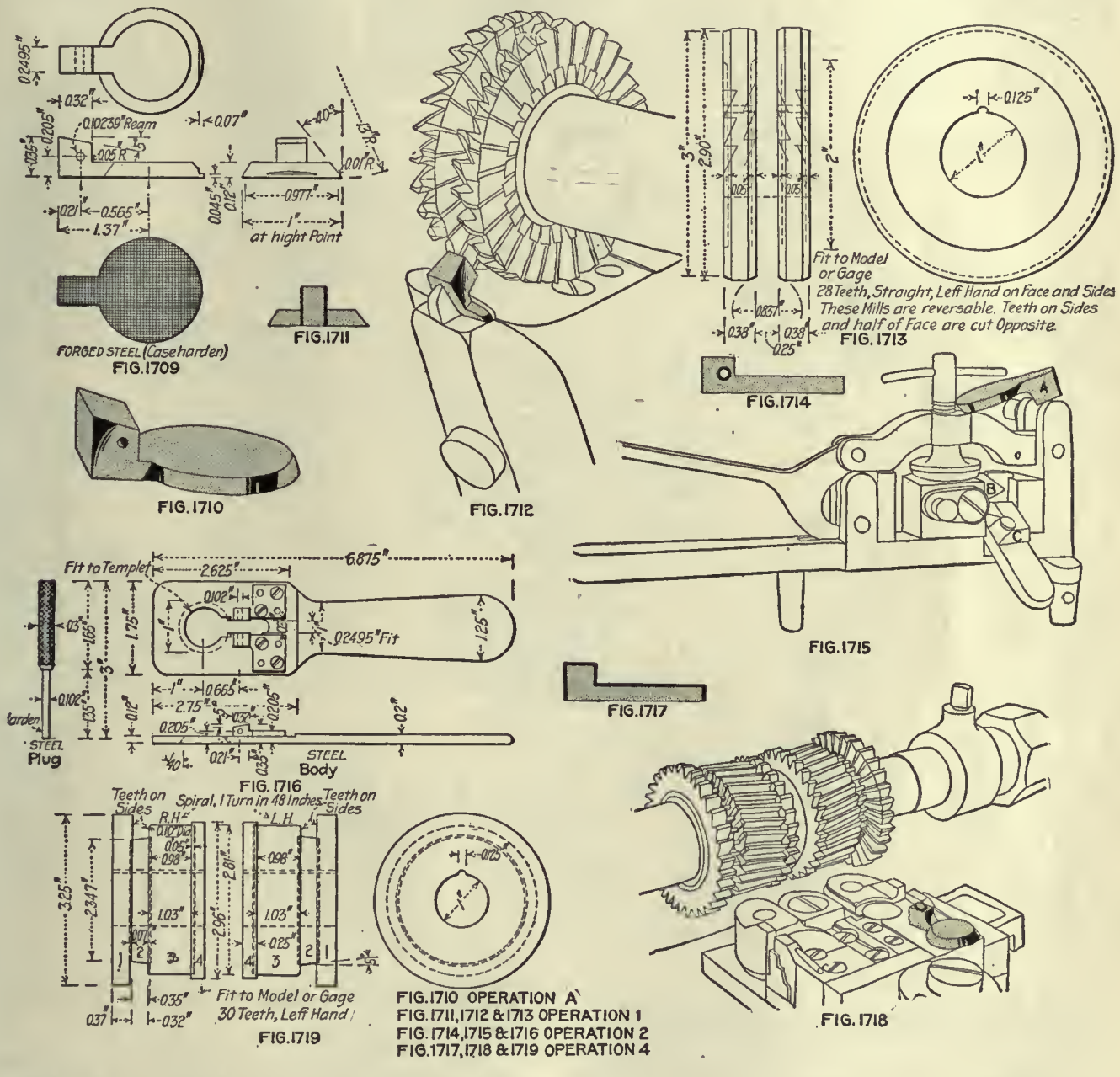

OPERATION 7. GRINDING CORNER OF TANG FOR SPRING

Number of Operators—One. Description of Operation—Rounding corners of tang. Apparatus and Equipment Used—Bench grinder or file. Production—350 pieces per hr.

OPERATION 8. ASSEMBLING TO BUTT PLATE

Number of Operators—One. Note—See butt plate.

OPERATION 9. CHECKING SEPARATE CAPS

Machine Used—Pratt & Whitney No. 2 Lincoln miller. Number of Machines per Operator—Four. Work-Holding Devices—Held by pin through hole in lug in indexing fixture. Tool-Holding Devices—Standard arbor. Cutting Tools—Serrated milling cutters. Number of Cuts—Two. Cut Data—120 r.p.m.; ⅛-in. feed. Coolant—Cutting oil, put on with brush. Average Life of Tool Between Grindings—5000 pieces. Gages—None. Production—40 pieces per hr.

OPERATIONS ON THE UPPER BAND

Operation

- A Blocking from billet
- A-1 Pickling
- B First trimming
- 1 Drilling to remove stock
- 3 Mandreling to inside shape
- 3-A Pickling
- 4 Dropping on mandrel edgewise
- 5 Milling flash from both ends and sides
- 5½ Burring operation 5
- 6½ Mandreling to working size
- 6½-A Pickling

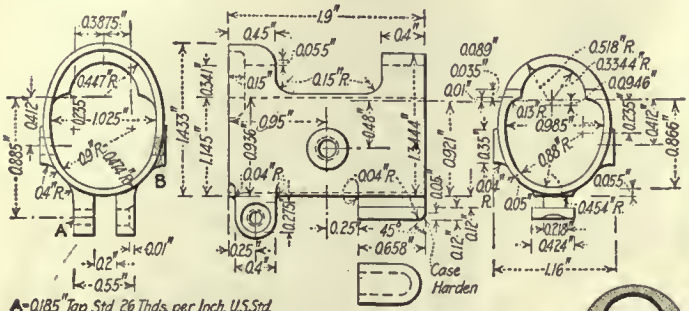

FIG. 1720

FIG. 1721

FIG. 1722

FIG. 1724

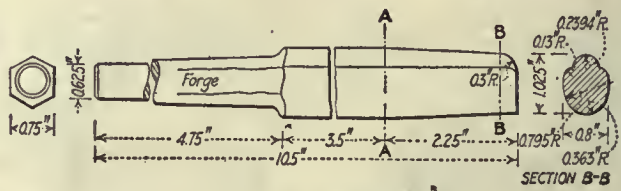

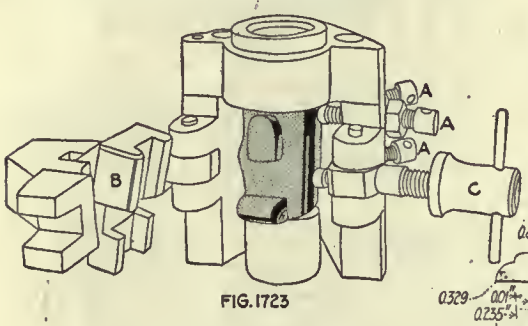

FIG. 1723

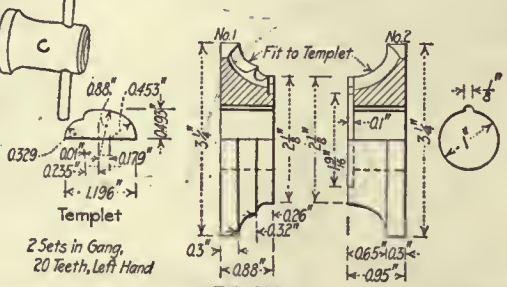

FIG. 1726

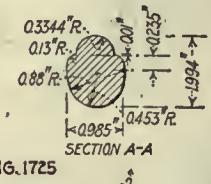

FIG. 1725

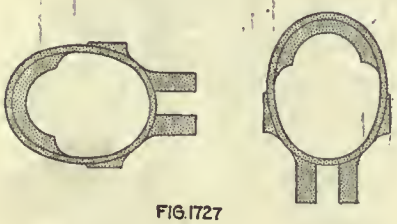

FIG. 1727

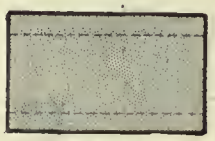

FIG. 1728

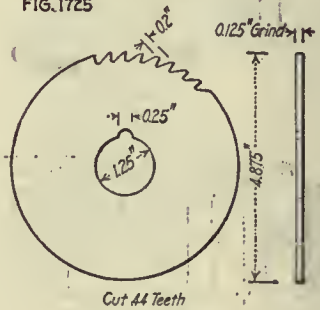

FIG. 1730-B

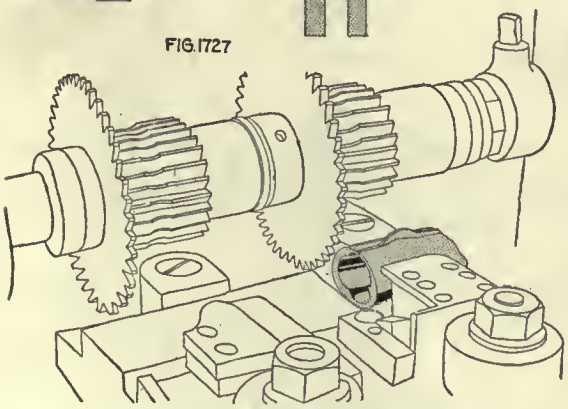

FIG. 1729

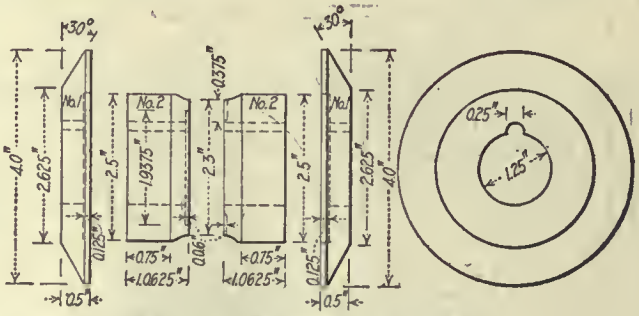

FIG. 1730-A

FIG. 1721, OPERATION A
FIG. 1722, 1723 OPERATION 1
FIG. 1724, 1725, 1726 OPERATION 3
FIG. 1727 OPERATION 4
FIG. 1728, 1729, 1730 OPERATION 5

- 7 Dropping on mandrel flatwise to finish
- 9 Trimming
- 9½ Annealing
- 9½-A Pickling
- 10 Straddle-milling both ends
- 13 Edging to finished length
- 14 Milling bottom crosswise and front end of bayonet lug
- 15 Milling swivel lug
- 16 Milling bayonet lug
- 17 Profiling bayonet lug
- 18 Hand-milling swing cut to remove stock between lugs
- 18½ Burring for operations 14, 15, 16, 17 and 18
- 19 Drilling screw holes and face-milling bosses
- 20 Profiling undercut for hand tenon of hand guard
- 20½ Burring operations 19 and 20
- 21 Tapping screw holes
- 22 Milling across top to remove stock
- 21½ Reaming barrel seat and mandreling to correct inside shape
- 23 Slotting
- 23½ Stamping letter H
- 24 Filing to finish
- 24¼ Rotary-milling outside
- 24½ Rotary-milling outside of barrel
- 25 Polishing
- 28 Cornering
- 29 Bluing, hardening lug, browning
- 30 Assembling with swivel and screw

OPERATION A. BLOCKING FROM BILLET

Transformation—Fig. 1721. Number of Operators—One. Description of Operation—Shaping from billet. Apparatus and Equipment Used—Billings & Spencer 1000-lb. drop hammer. Production—650 pieces per hr. Note—Blanked solid.

OPERATION A-1. PICKLING

Number of Operators—One. Description of Operation—Placed in wire baskets and put in the pickling solution (1 part sulphuric acid to 9 parts water) and left in this from 10 to 12 min. Apparatus and Equipment Used—Wire baskets, wooden pickling tanks and hand hoist.

OPERATION B. FIRST TRIMMING

Machine Used—Bliss back-geared press, 1½-in. stroke. Number of Operators per Machine—One. Punches and Punch Holders—Square shank. Dies and Die Holders—Setscrew in

shoe; placed on mandrel for trimming. Stripping Mechanism—Pushed down through die. Average Life of Punches—15,000 pieces. Production—500 pieces per hr.

OPERATION 1. DRILLING TO REMOVE STOCK

Transformation—Fig. 1722. Machine Used—Barnes upright drilling machine. Number of Machines per Operator—Seven. Work-Holding Devices—Drill jig, Fig. 1723; screws A position the forging; the floating shoe B and the clamp C hold it. Tool-Holding Devices—Taper shank. Cutting Tools—Twist drill, 1 1/16 in. Cut Data—250 r.p.m.; 5/8-in. feed. Coolant—Compound, 1/4-in. stream. Average Life of Tool Between Grindings—100 pieces. Gages—None. Production—30 pieces per hr.

OPERATION 3. MANDRELING TO SHAPE

Transformation—Fig. 1724. Number of Operators—One. Description of Operation—The upper band, having the hole drilled, is heated and placed under a drop hammer; the mandrel, Fig. 1725, is then forced through the band, giving it the approximate shape of the barrel and stock. Apparatus and Equipment Used—Billings & Spencer 400-lb. drop hammer and mandrel, Fig. 1725. Production—200 per hr. Note—Fig. 1726 shows the milling cutter used in making these mandrels; this cutter is used in different operations to bring the band to the correct size and shape.

OPERATION 3-A. PICKLING

Number of Operators—One. Description of Operation—Same as previous pickling.

OPERATION 4. DROPPING ON MANDREL EDGEWISE

Transformation—Fig. 1723. Number of Operators—One. Description of Operation—Dropping edgewise on mandrel by turning first on the side and then with lugs down. Apparatus and Equipment Used—Billings & Spencer 400-lb. drop hammer. Production—80 pieces per hr.

OPERATION 5. MILLING END AND SIDE FLASH

Transformation—Fig. 1728. Machine Used—Pratt & Whitney No. 2 Lincoln miller. Number of Machines per Operator—Four. Work-Holding Devices—By vise jaws, Fig. 1729. Tool-Holding Devices—Standard arbor. Cutting Tools—Gang of cutters, Fig. 1730. Number of Cuts—One. Cut Data—70 r.p.m.; 5/8-in. feed. Coolant—Compound, 1/4-in. stream. Average Life of Tool Between Grindings—5000 pieces. Gages—None. Production—40 pieces per hr. Note—Reversed in jaws to trim both sides and both ends.

OPERATION 5½. BURRING OPERATION 5

Number of Operators—One. Description of Operation—Removing burrs from operation 5. Apparatus and Equipment Used—File. Production—150 pieces per hr.

OPERATION 6½. MANDRELING TO WORKING SIZE

Transformation—Fig. 1731. Number of Operators—One. Description of Operation—Driving mandrel in board to insure correct working size. Apparatus and Equipment Used—Billings & Spencer 400-lb. drop hammer; mandrel similar to Fig. 1725. Gages—Fig. 1732; A, length; B, diameter; C, clamping lug; D, bayonet lug. Production—350 pieces per hr.

OPERATION 6½-A. PICKLING

Number of Operators—One. Description of Operation—Same as previous picklings.

OPERATION 7. DROPPING ON MANDREL FLATWISE TO FINISH

Transformation—Fig. 1733. Number of Operators—One. Description of Operation—Dropping band flatwise to finish, using mandrel shown. Apparatus and Equipment Used—Billings & Spencer 400-lb. drop hammer; mandrel, Fig. 1734. Gages—None. Production—65 pieces per hr.

OPERATION 9. TRIMMING

Machine Used—Bliss back-geared press. Number of Operators per Machine—One. Punches and Punch Holders—Square shank. Dies and Die Holders—In shoe by setscrew. Stripping Mechanism—Pushed down through die. Average Life of Punches and Dies—15,000 pieces. Production—500 pieces per hr. Note—Trimmed on mandrel.

OPERATION 9½. ANNEALING

Number of Operators—One. Description of Operation—Placed in iron pots packed with powdered charcoal, heated to 850 deg. C. (1562 deg. F.) and left over night to cool. Apparatus and Equipment Used—Brown & Sharpe annealing furnace, oil burners, powdered charcoal.

OPERATION 9½-A. PICKLING

Number of Operators—One. Description of Operation—Same as previous picklings.

OPERATION 10. STRADDLE-MILLING BOTH ENDS

Transformation—Fig. 1735. Machine Used—Pratt & Whitney No. 2 Lincoln miller. Number of Machines per Operator—Four. Work-Holding Devices—In special vise jaws to hold

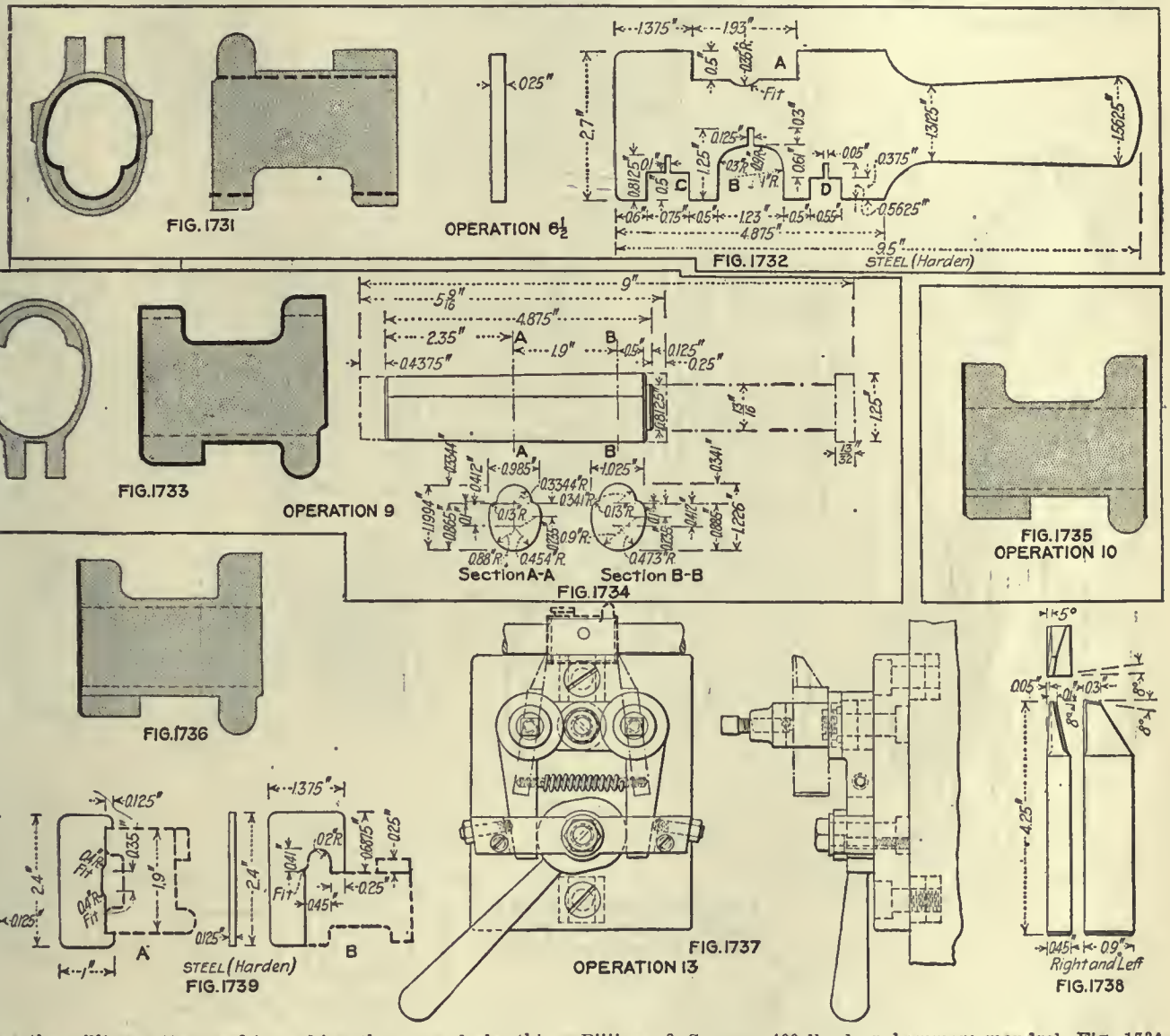

two at one setting. Tool-Holding Devices—Standard arbor. Cutting Tools—Side-cutting milling cutters. Number of Cuts—One. Cut Data—70 r.p.m.; ⅝-in. feed. Coolant—Cutting oil, put on with brush. Average Life of Tool Between Grindings—5000 pieces. Gages—Form. Production—30 pieces per hr.

OPERATION 13. EDGING TO FINISHED LENGTH

Transformation—Fig. 1736. Machine Used—Special machine built at Hill shops. Number of Operators per Machine—One. Work-Holding Devices—Held on arbor. Tool-Holding Devices—Tool holder on crossfeed slide, Fig. 1737. Cutting Tools—Two hand-forged side tools, right and left, Fig. 1738. Number of Cuts—One. Cut Data—250 r.p.m.; hand feed. Coolant—None. Average Life of Tool Between Grindings—200 pieces. Gages—Fig. 1739; A, length; B, distance of lug from end. Production—125 pieces per hr.

OPERATION 14. MILLING BOTTOM CROSSWISE AND FRONT END OF BAYONET LUG

Transformation—Fig. 1740. Machine Used—Pratt & Whitney No. 2 Lincoln miller. Number of Machines per Operator—Four. Work-Holding Devices—Held on stud clamped by vise jaws, Fig. 1741. Tool-Holding Devices—Standard arbor. Cutting Tools—Gang of milling cutters, Fig. 1742. Number of Cuts—One. Cut Data—60 r.p.m.; ⅝-in. feed. Coolant—Compound, ¼-in. stream. Average Life of Tool Between Grindings—5000 pieces. Gages—Contour of lug. Production—50 pieces per hr.

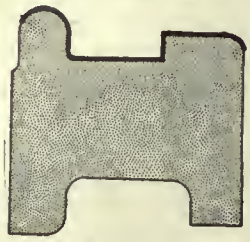

FIG. 1740.

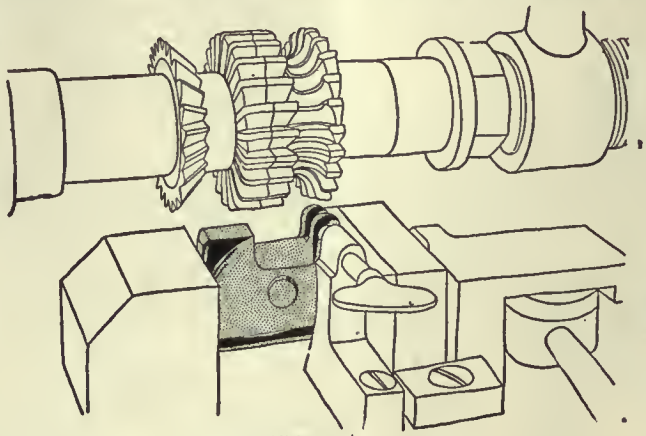

FIG. 1741

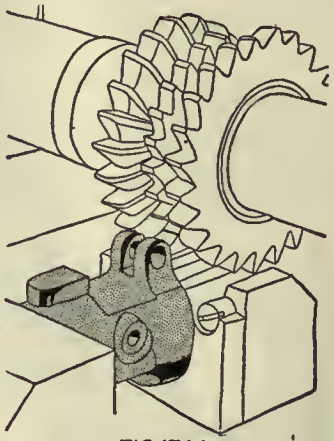

FIG. 1744.

FIG. 1743

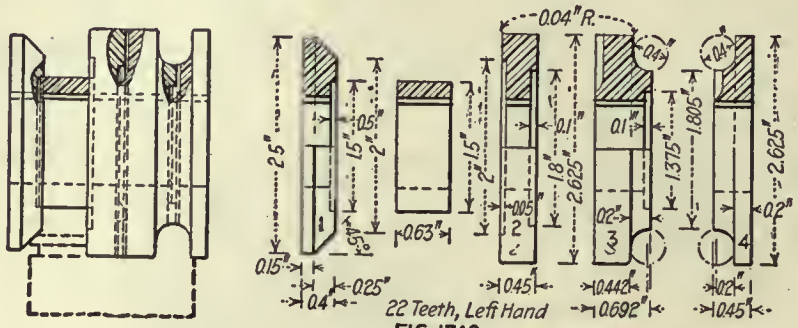

FIG. 1742

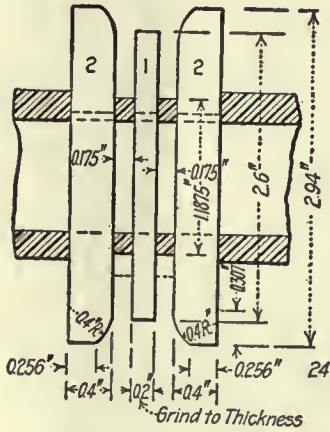

FIG. 1745

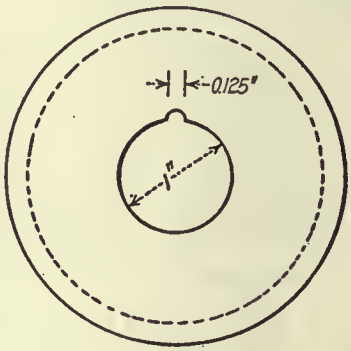

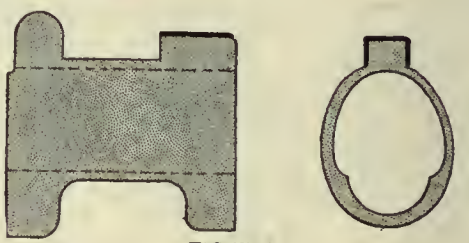

FIG. 1746

FIG. 1740, 1741 & 1742 OPERATION 14
FIG. 1743, 1744 & 1745 OPERATION 15
FIG. 1746, 1747 & 1748 OPERATION 16

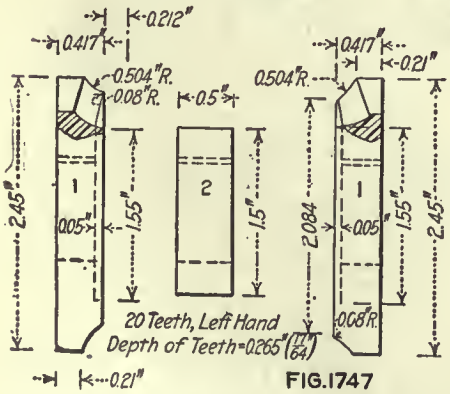

FIG. 1747

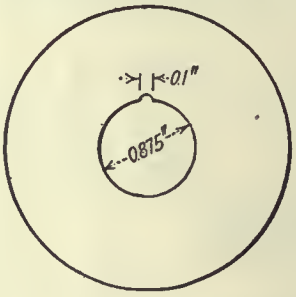

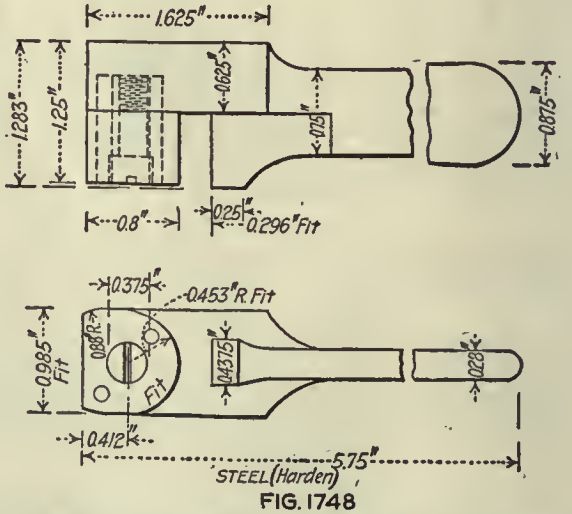

FIG. 1748

jaws, Fig. 1744. Tool-Holding Devices—Standard arbor. Cutting Tools—Milling cutters, Fig. 1745. Number of Cuts—One. Cut Data—70 r.p.m.; ⅝-in. feed. Coolant—Compound, ¼-in. stream. Average Life of Tool Between Grindings—5000 pieces. Gages—Width of swivel lug. Production—50 pieces per hr.

OPERATION 16. MILLING BAYONET LUG

Transformation—Fig. 1746. Machine Used—Pratt & Whitney No. 2 Lincoln miller. Number of Machines per Operator—Four. Work-Holding Devices—Held on stud clamped by vise jaws, similar to Fig. 1744. Tool-Holding Devices—Standard arbor. Cutting Tools—Milling cutters, Fig. 1747. Number of Cuts—One. Cut Data—70 r.p.m.; ⅝-in. feed. Coolant—Compound, ¼-in. stream. Average Life of Tool Between Grindings—5000 pieces. Gages—Fig. 1748; A, height from inside of band; B, width. Production—50 pieces per hr.

OPERATION 17. PROFILING BAYONET LUG

Transformation—Fig. 1749. Machine Used—Pratt & Whitney No. 2 profiler. Number of Operators per Machine—One. Work-Holding Devices—Held on stud, clamped by vise jaws, Fig. 1750. Tool-Holding Devices—Taper shank. Cutting Tools—Profiling cutters, Fig. 1751; A, first cut on outside; B, undercutting. Number of Cuts—Two. Cut Data—1200 r.p.m.; hand feed. Coolant—Compound, ¼-in. stream. Average Life of Tool Between Grindings—300 pieces. Gages—Length, width and undercut. Production—35 pieces per hr.

OPERATION 18. HAND-MILLING SWING CUT TO REMOVE STOCK BETWEEN LUGS

Transformation—Fig. 1752. Machine Used—Brainard large hand miller. Number of Operators per Machine—One. Work-Holding Devices—Held in rotating fixture, Fig. 1753. Tool-Holding Devices—Standard arbor. Cutting Tools—Milling cutters, Fig. 1754. Number of Cuts—One. Cut Data—450 r.p.m.; hand feed. Coolant—Cutting oil, $\frac{1}{16}$-in. stream. Average Life of Tool Between Grindings—5000 pieces. Gages—None. Production—125 pieces per hr.

OPERATION 18½. BURRING FOR OPERATIONS 14, 15, 16 17 AND 18

Number of Operators—One. Description of Operation—Removing burrs from previous operations. Apparatus and Equipment Used—File. Production—100 pieces per hr.

FIG.1749

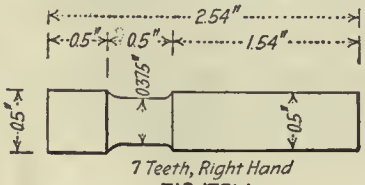

7 Teeth, Right Hand

FIG.1751A

OPERATION 17

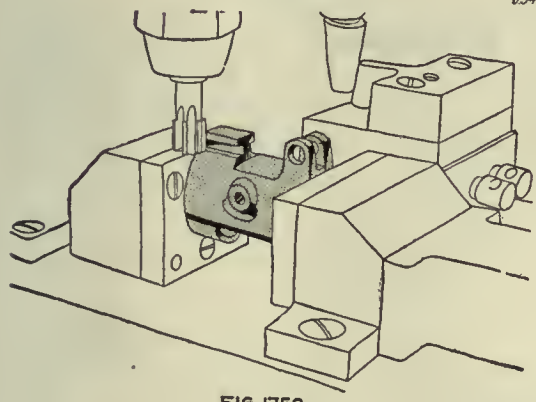

FIG.1750

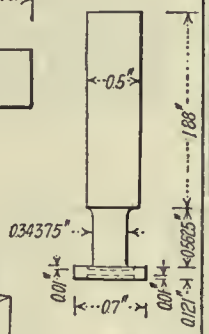

9 Teeth, Right Hand

FIG.1751B

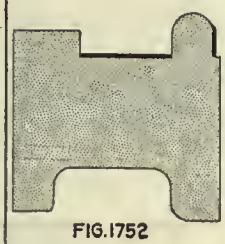

FIG.1752

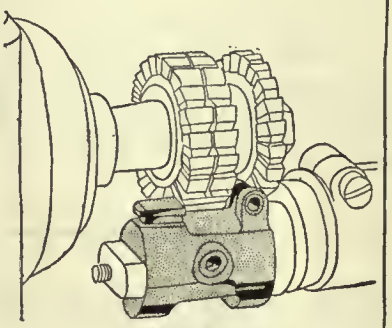

FIG.1753

OPERATION 18

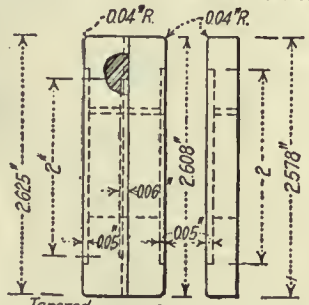

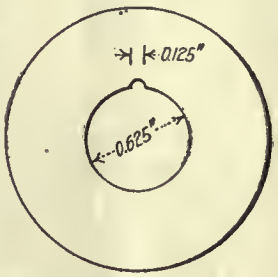

22 Teeth, Left Hand

FIG.1754

The upper band requires quite a number of operations and the shape of the piece requires somewhat unusual fixtures for holding it. One of these is shown in Fig. 1723.

For trimming the ends square and to length, the special tool block, Fig. 1737, has been devised. This carries two tools, each in a separate tool post and actuated by a double lobed cam at the back. The band is held on and rotated by a mandrel as shown, during this operation. Some of the gaging operations are also of interest as well as the profile undercutting shown in Fig. 1749.

The drilling jig for the seven holes is shown in Figs. 1756 and 1757, the bushings being held in the swing leaf *A* and held by the arm *B*. The clamping is done by the hook cam in the arm and the jig has feet on the side for holding the work level under the drill. The gaging for this is shown in Fig. 1759, while another form of cam actuated clamp is shown in Fig. 1761.

OPERATION 19. DRILLING SCREW HOLES AND FACE-MILLING BOSSES

Transformation—Fig. 1755. Machine Used—Pratt & Whitney three-spindle 16-in. upright miller. Number of Operators per Machine—One. Work-Holding Devices—Drill jig; closed in Fig. 1756, open in Fig. 1757; the leaf A swings over and is held by the arm B. Tool-Holding Devices—Drill chuck. Cutting Tools—Drill and counterbore, Fig. 1758; A for side screw lug; B for clamp lug. Number of Cuts—Three. Cut Data—750 r.p.m.; hand feed. Coolant—Cutting oil, ⅛-in. stream. Average Life of Tool Between Grindings—200 pieces. Gages—Fig. 1759, location of holes; also plug form and radius gages. Production—35 pieces per hr.

OPERATION 20. PROFILING UNDERCUT FOR HAND TENON OF HAND GUARD

Transformation—Fig. 1760. Machine Used—Pratt & Whitney No. 2 profiler. Number of Operators per Machine—One. Work-Holding Devices—Held on stud, upright at A, clamped by finger B and cam C, Fig. 1761; cam D clamps work at outer end; E is profiling form. Tool-Holding Devices—Taper shank. Cutting Tools—Profiling cutter, 0.5 in. in diameter, teeth 0.5 in. long; six teeth for roughing cutter, seven for finishing cutter, both right-hand; teeth cut on face and end. Number of Cuts—Two. Cut Data—1200 r.p.m.; hand feed. Coolant—Compound, ¼-in. stream. Average Life of Tool Between Grindings—200 pieces. Gages—Form. Production—35 pieces per hr.

OPERATION 20½. BURRING OPERATIONS 19 AND 20.

Number of Operators—One. Description of Operation—Removing burrs from operations 19 and 20. Apparatus and Equipment Used—File. Production—75 pieces per hr.

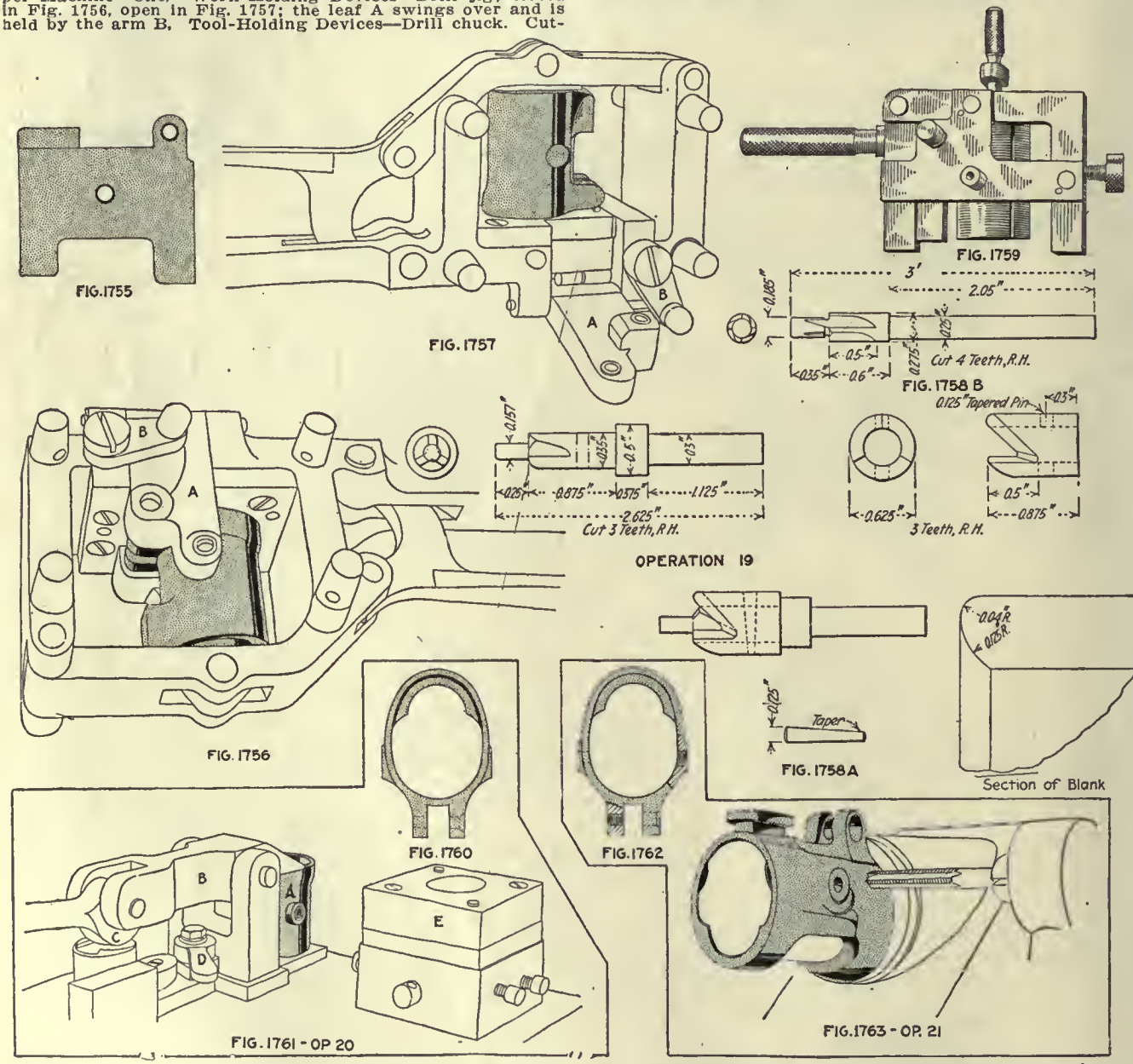

OPERATION 21. TAPPING SCREW HOLES

Transformation—Fig. 1762. Number of Operators—One. Description of Operation—Tapping screw holes in special fixture, partly shown in Fig. 1763; the tapping spindle is mounted on the same base as the work-holding fixture and operated by a handwheel. Apparatus and Equipment Used—Tapping fixture, Fig. 1763, and tap, which is 0.185 in. in diameter, 26 threads per inch; it has three right-hand spiral flutes; thread-

ed part is 1.4 in. long. Gages—Threaded plug gage. Production—350 pieces per hr.

OPERATION 22. MILLING ACROSS TOP TO REMOVE STOCK

Transformation—Fig. 1764. Machine Used—Pratt & Whitney No. 2 Lincoln miller. Number of Machines per Operator—Four. Work-Hoiding Devices—Held on mandrel, clamped by jaws, Fig. 1765; mandrel is shown at A. Tool-Holding Devices—Standard arbor. Cutting Tools—Milling cutters, Fig. 1766. Number of Cuts—One. Cut Data—60 r.p.m.; ⅝-in. feed. Coolant—Compound, ¼-in. stream. Average Life of Tool Between Grindings—5000 pieces. Gages—None. Production—50 pieces per hr.

OPERATION 21½. REAMING BARREL SEAT AND MANDRELING TO CORRECT INSIDE SHAPE

Transformation—Fig. 1767. Number of Operators—One. Description of Operation—Reaming barrel seat and correcting inside shape. Apparatus and Equipment Used—Bench lathe and block to hold band from turning; reamer is 0.6584 in. in diameter, 14 right-hand spiral flutes, one turn in 7.41 in.; fluted portion is 5.70 in. long. Gages—Fig. 1768; this is also used for operation 6½. Production—150 pieces per hr. Note—A mandrel is drawn through the hole to correct shape.

OPERATION 23. SLOTTING

Transformation—Fig. 1769. Machine Used—Whitney hand miller. Number of Operators per Machine—One. Work-Holding Devices—Held on stud to prevent distortion; clamped by vise jaws. Tool-Holding Devices—Standard arbor. Cutting Tools—Slitting saw, 2 in. in diameter, 0.05 in. thick. Number of Cuts—One. Cut Data—650 r.p.m.; hand feed. Coolant—Cutting oil, put on with brush. Average Life of Tool Between Grindings—1500 pieces. Gages—Width of slot. Production—350 pieces per hr.

FIG. 1764

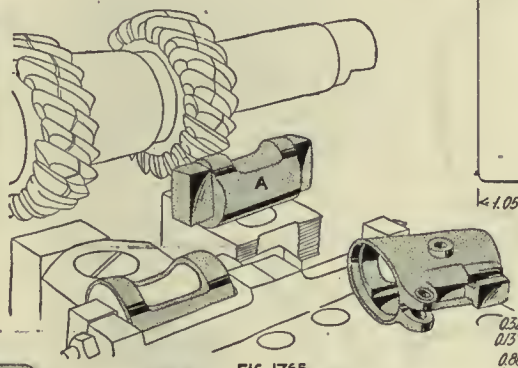

FIG. 1765

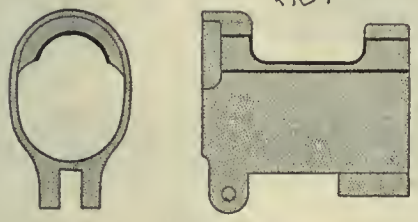

FIG. 1764, 1765, 1766 OP. 22
FIG. 1767, 1768 OP. 21½
FIG. 1769 OP. 23
FIG. 1770, 1771, 1772 OP. 24¼

FIG. 1767

FIG. 1769 FIG. 1770

OPERATION 23½. STAMPING LETTER H

Number of Operators—One. Description of Operation—Stamping letter H. Apparatus and Equipment Used—Hand stamp and hammer. Production—600 pieces per hr.

OPERATION 24. FILING TO FINISH

Number of Operators—One. Description of Operation—Finish-filing. Apparatus and Equipment Used—File. Production—100 pieces per hr.

OPERATION 24¼. ROTARY-MILLING OUTSIDE

Transformation—Fig. 1770. Machine Used—Brainard large hand miller. Number of Operators per Machine—One. Work-Holding Devices—Rotating fixture, Fig. 1771; the form A, in contact with B, gives proper shape. Tool-Holding Devices—Taper shank. Cutting Tools—Milling cutters, Fig. 1772. Number of Cuts—One. Cut Data—450 r.p.m. Coolant—Cutting oil, ⅛-in. stream. Average Life of Tool Between Grindings—5000 pieces. Gages—None. Production—100 pieces per hr.

OPERATION 25. POLISHING

Number of Operators—One. Description of Operation—Polishing outside surface. Apparatus and Equipment Used—Polishing jack and wheel. Production—60 pieces per hr.

OPERATION 28. CORNERING

Number of Operators—One. Description of Operation—Filing and cornering. Apparatus and Equipment Used—File. Production—100 pieces per hr.

OPERATION 29. BLUING, HARDENING AND BROWNING

Description of Operation—The upper band is blued in the regular way, then the bayonet lug or stud is hardened in cyanide at 1500 deg. F.; after this the band is browned in the regular way; the object of bluing is to insure a rustproof coating on every part in case the browning solution should not be brushed into every corner, such as between the lugs; the bluing also effectually prevents a bright spot being left to reflect light in any direction.

OPERATION 30. ASSEMBLING

Number of Operators—One. Description of Operation—Assembling screw and swivel. Apparatus and Equipment Used—Screwdriver and hands. Production—350 pieces per hr.

The Lower Band

The lower band, Fig. 1773, holds the back end of the upper or hand guard in place on the barrel and the stock. It also carries the front swivel for the strap by which the rifle is swung over the shoulder. As made at present, it is a drop forging and goes through the 28 operations shown. Experiments looking to the making of these bands from sheet steel are now under way.

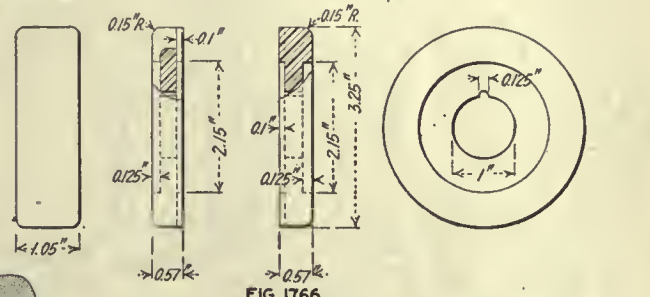

FIG. 1766

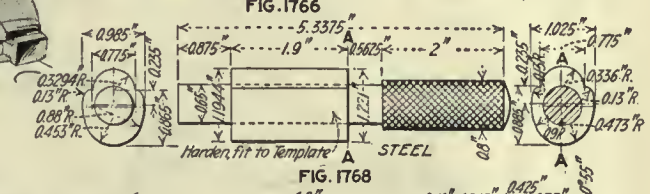

FIG. 1768

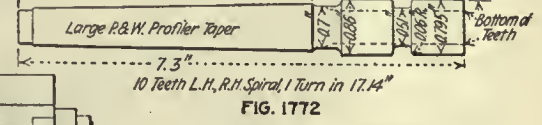

FIG. 1772

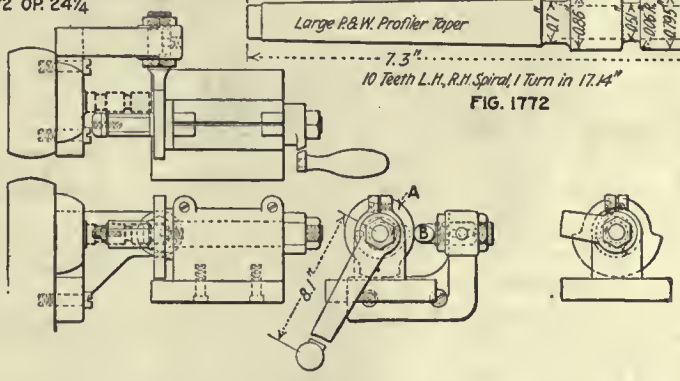

FIG. 1771

OPERATIONS ON THE LOWER BAND

Operation	
A	Blocking from bar
A–1	Pickling
C	Trimming outside
B	Mandreling to shape
B–1	Pickling
D	Dropping on mandrel
D–1	Pickling
E	Trimming ends
1	Edging sides to remove stock for forging
F	Dropping on mandrel to finish
F–1	Pickling
G	Trimming ends
2	Edging sides to width
H	Annealing
3	Pressing to size and shape and stamping U
3½	Straightening and correcting lug
4	Buffing to finish thickness
5	Milling lugs to finish
6½	Burring
7	Drilling screw hole in lugs and counterboring
7½	Filing inside and outside of lug
8	Tapping lug for screw
8½	Burring

10 Polishing
10½ Slotting
11 Filing inside and cornering
12 Assembling lower band and lower-band swivel
13 Bluing

OPERATION A. BLOCKING FROM BAR

Transformation—Fig. 1774. Number of Operators—One. Description of Operation—Shaping from bar. Apparatus and Equipment Used—Billings & Spencer 800-lb. drop hammer. Production—185 pieces per hr.

OPERATION A-1. PICKLING

Number of Operators—One. Description of Operation—Placed in wire baskets and put in the pickling solution, which consists of 1 part sulphuric acid and 9 parts water; left in this for from 10 to 12 min. Apparatus and Equipment Used—Wire baskets, wooden pickling tanks, hand hoist.

OPERATION C. TRIMMING OUTSIDE

Machine Used—Snow-Brooks No. 1; 1½-in. stroke. Number of Operators per Machine—One. Punches and Punch Holders—Round shank. Dies and Die Holders—Held in shoe by setscrew. Stripping Mechanism—Pushed down through die. Average Life of Punches and Dies—15,000 pieces. Production—450 pieces per hr. Note—This punch and die trims outside and inside in one operation.

OPERATION B. MANDRELING TO SHAPE

Transformation—Fig. 1775. Number of Operators—One. Description of Operation—Mandreling to shape, as with upper band. Apparatus and Equipment Used—Billings & Spencer 400-lb. drop hammer; taper mandrel of proper size and shape. Gages—None. Production—125 pieces per hr.

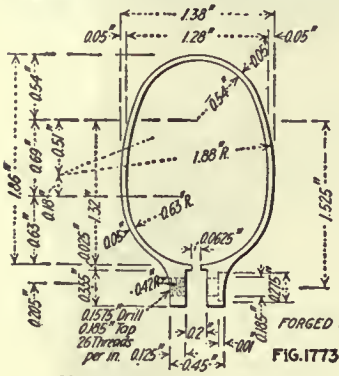

FIG. 1773

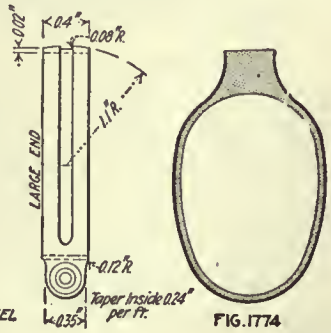

FIG. 1774

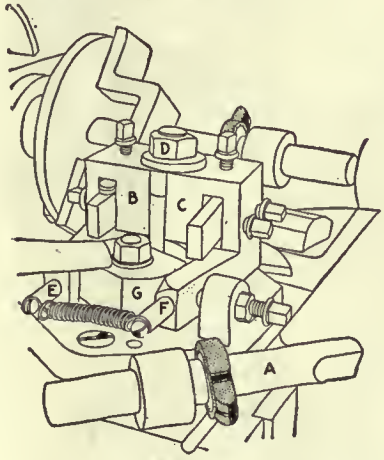

FIG. 1777

FIG. 1775

FIG. 1774, OP. A
FIG. 1775 OP. B
FIG. 1776, 1777, 1778, OP. 1
FIG. 1779 OP. G
FIG. 1780, 1781 OP. 2

OPERATION B-1. PICKLING

Number of Operators—One. Description of Operation—Same as previous pickling.

OPERATION D. DROPPING ON MANDREL

Number of Operators—One. Description of Operation—Shaping flatwise on mandrel. Apparatus and Equipment Used—Billings & Spencer 400-lb. drop hammer; mandrel similar to operation B. Gages—None. Production—125 pieces per hr.

OPERATION D-1. PICKLING

Description of Operation—Same as previous pickling.

OPERATION E. TRIMMING ENDS

Machine Used—Perkins No. 19; 1½-in. stroke. Number of Operators per Machine—One. Punches and Punch Holders—Square shank. Dies and Die Holders—Held in shoe by setscrew. Stripping Mechanism—Pushed down through dies. Average Life of Punches and Dies—About 15,000 pieces. Gages—None. Production—500 pieces per hr.

OPERATION 1. EDGING SIDES TO REMOVE STOCK FOR FORGING

Transformation—Fig. 1776. Machine Used—Machine built at Hill shop. Number of Operators per Machine—One. Work-Holding Devices—On mandrel A, Figs. 1777 and 1778. Tool-Holding Devices—Tools held in crossfeed of carriage, Fig. 1778; tool posts B and C are pivoted at D; the tails E and F are controlled by the cam G and moved into position to give correct width. Cutting Tools—Side tools, right and left. Number of Cuts—Two. Cut Data—250 r.p.m.; hand feed. Coolant—Compound, ⅛-in. stream. Average Life of Tool Between Grindings—250 pieces. Gages—Width. Production—85 pieces per hr.

OPERATION F. DROPPING ON MANDREL TO FINISH

Transformation—Same as Fig. 1775. Number of Operators—One. Description of Operation—Dropping to finish, using mandrel similar to operation B. Apparatus and Equipment Used—Billings & Spencer 400-lb. drop hammer. Gages—Width and thickness. Production—125 pieces per hr.

OPERATION F-1. PICKLING

Description of Operation—Same as previous operations on pickling.

OPERATION G. TRIMMING ENDS

Transformation—Fig. 1779. Machine Used—Perkins No. 19; 1½-in. stroke. Number of Operators per Machine—One. Punches and Punch Holders—Square shank. Dies and Die Holders—Held in shoe by setscrew. Stripping Mechanism—Pushed down through dies. Gages—None. Production—500 pieces per hr.

OPERATION 2. EDGING SIDES TO WIDTH

Transformation—Fig. 1780. Machine Used—Machine built at Hill shop, same as for upper band. Number of Operators per Machine—One. Work-Holding Devices—On arbor, Fig. 1781. Tool-Holding Devices—Cutters held in crossfeed carriage, same as Fig. 1778. Cutting Tools—Side tools, right and left. Number of Cuts—Two. Cut Data—250 r.p.m.; hand feed.

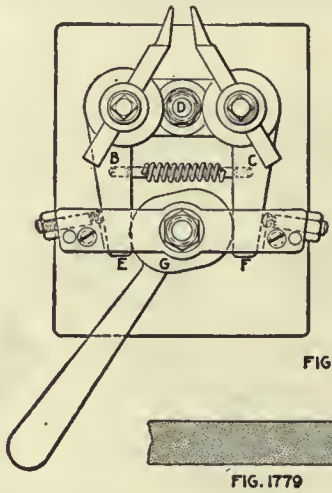

FIG. 1778

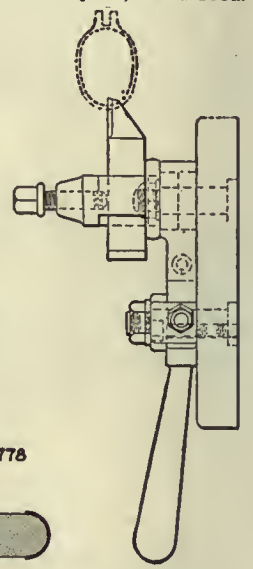

FIG. 1779

FIG. 1776

FIG. 1780

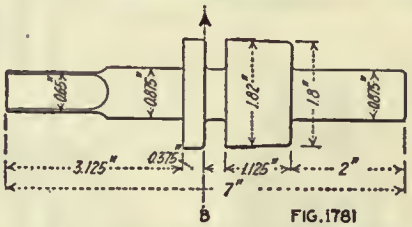

FIG. 1781

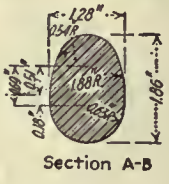

Coolant—Compound, ⅛-in. stream. Average Life of Tool Between Grindings—250 pieces. Gages—Width. Production—85 pieces per hr.

OPERATION H. ANNEALING

Number of Operators—One. Description of Operation—Placed in iron pots packed with powdered charcoal and heated to 850 deg. C. (1562 deg. F.); left over night to cool. Apparatus and Equipment Used—Iron pots, Brown & Sharpe annealing furnace, oil burner, powdered charcoal.

OPERATION 3. PRESSING TO SIZE AND SHAPE AND STAMPING U

Machine Used—Perkins No. 19 press, 1½-in. stroke. Number of Operators per Machine—One. Punches and Punch Holders—Square shank. Dies and Die Holders—In shoe, by setscrew placed on mandrel pressed to shape. Lubricant—None. Gages—For size and shape of inside and size of lug. Production—150 pieces per hr. Note—Hand stamp and hammer are used to stamp letter U.

OPERATION 3½. STRAIGHTENING AND CORRECTING

Number of Operators—One. Description of Operation—Straightening lugs. Apparatus and Equipment Used—Hammer and block. Gages—None. Production—200 pieces per hr.

OPERATION 4. BUFFING TO FINISH THICKNESS

Number of Operators—One. Description of Operation—Buffing to thickness. Apparatus and Equipment Used—Buffing wheel. Production—125 pieces per hr.

OPERATION 5. MILLING LUGS TO FINISH

Transformation—Fig. 1782. Machine Used—Pratt & Whitney No. 2 Lincoln miller. Number of Machines per Operator—

Four. Work-Holding Devices—A double fixture, held on studs clamped by vise jaws, Fig. 1783; for crossmilling, cam A holds band; for sides the stop B takes thrust of cutters, clamp C swings sidewise against work and locks on latch D; Fig. 2053 gives details, though side fixture is now changed. Tool-Holding Devices—Standard arbor. Cutting Tools—Milling cutters, Fig. 1784. Number of Cuts—One. Cut Data—70 r.p.m.; hand feed. Coolant—Cutting oil, put on with brush. Average Life of Tool Between Grindings—5000 pieces. Gages Fig. 2055; ears from side; others for form of ears, width and thickness. Production—50 pieces per hr.

OPERATION 6½. BURRING

Number of Operators—One. Description of Operation—Removing burrs from operation 5. Apparatus and Equipment Used—File. Production—300 pieces per hr.

OPERATION 7. DRILLING SCREW HOLE IN LUGS AND COUNTERBORING

Transformation—Fig. 1786. Machine Used—Pratt & Whitney three-spindle 16-in. upright drilling machine. Number

Fig. 1789. Number of Cuts—One. Cut Data—250 r.p.m. Coolant—Cutting oil, put on with brush. Average Life of Tool Between Grindings—1500 pieces. Gages—Plug thread gage. Production—350 pieces per hr.

OPERATION 8½. BURRING

Number of Operators—One. Description of Operation—Removing burrs from previous operations. Apparatus and Equipment Used—File. Production—400 pieces per hr.

OPERATION 10. POLISHING

Number of Operators—One. Description of Operation—Polishing all outside surfaces. Apparatus and Equipment Used—Wheel and polishing jack. Production—20 pieces per hr.

OPERATION 10½. SLOTTING

Transformation—Fig. 1790. Machine Used—Whitney hand miller. Number of Operators per Machine—One. Work-Holding Devices—Work A is held on stud by clamp B, operated by cam C, Fig. 1791; the cars D prevent spreading of ears. Tool-Holding Devices—Standard arbor. Cutting Tools—Slitting saw, Fig. 1792. Number of Cuts—One. Cut Data—650

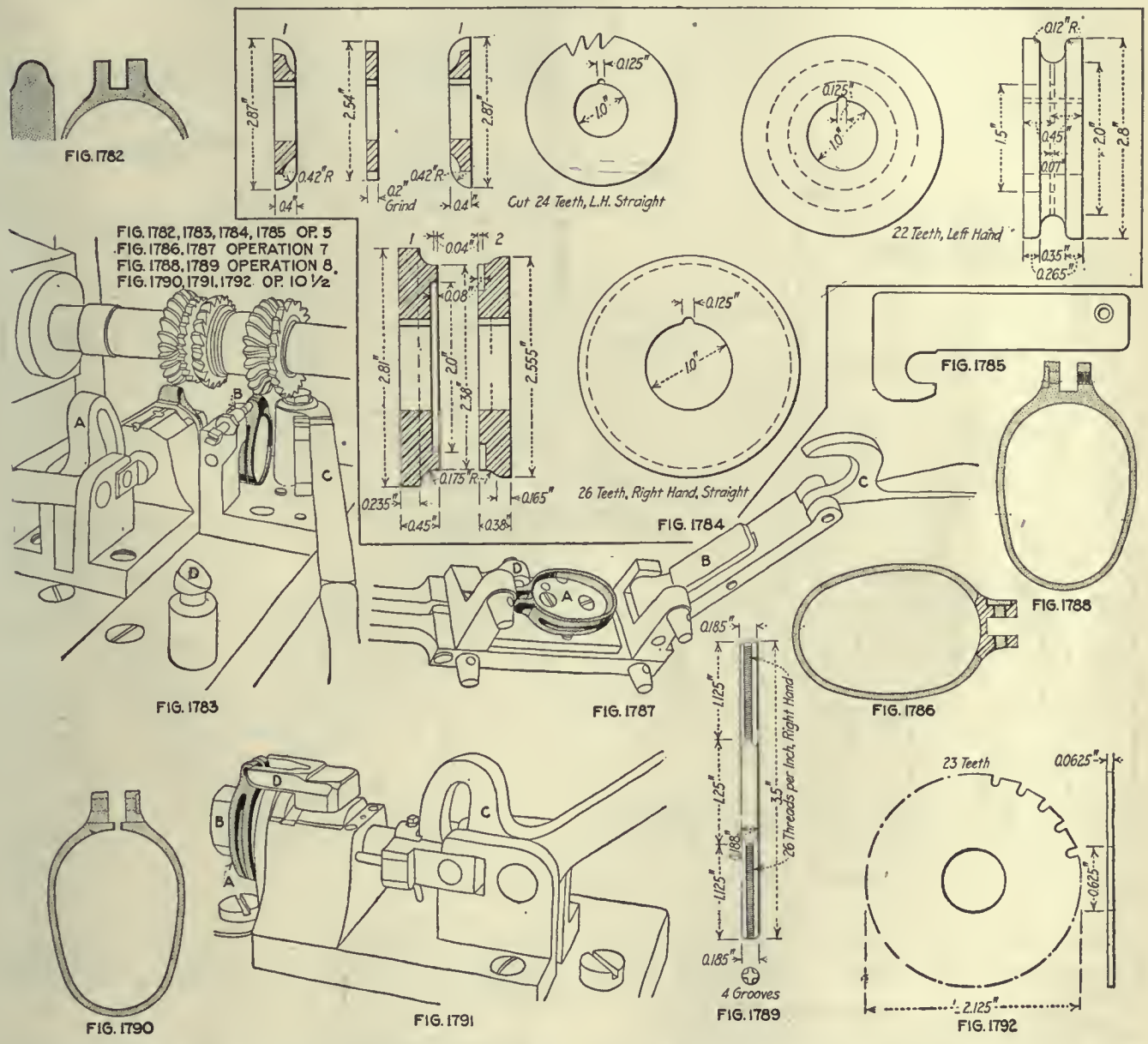

of Operators per Machine—One. Work-Holding Devices—Drill jig, Fig. 1787; work located on plug A, held down by plate B, locked by hook C; bushing on side; knockout for removing work. Tool-Holding Devices—Drill chuck. Cutting Tools—Twist drill, and counterbore for screw head. Number of Cuts—Three. Cut Data—750 r.p.m. for drill; 450 r.p.m. for counterbore. Coolant—Cutting oil, ⅛-in. stream. Average Life of Tool Between Grindings—300 pieces. Gages—Diameter of both holes and radius of ear. Production—60 pieces per hr.

OPERATION 7½. FILING INSIDE AND OUTSIDE OF LUG

Number of Operators—One. Description of Operation—Filing lug inside and out. Apparatus and Equipment Used—File. Production—200 pieces per hr.

OPERATION 8. TAPPING LUG FOR SCREW

Transformation—Fig. 1788. Machine Used—Pratt & Whitney tapping machine. Number of Operators per Machine—One. Work-Holding Devices—Held in hands. Tool-Holding Devices—Tap-screw chuck. Cutting Tools—Double ended,

r.p.m.; hand feed. Coolant—Cutting oil, put on with brush. Average Life of Tool Between Grindings—5000 pieces. Gages None. Production—350 pieces per hr.

OPERATION 11. FILING INSIDE AND CORNERING

Number of Operators—One. Description of Operation—General filing and cornering. Apparatus and Equipment Used—File. Production—90 pieces per hr.

OPERATION 12. ASSEMBLING LOWER BAND AND LOWER-BAND SWIVEL

Number of Operators—One. Description of Operation—Assembling lower band and swivel. Apparatus and Equipment Used—Brace screwdriver and wooden block to hold band. Production—350 pieces per hr.

OPERATION 13. BLUING

Description of operation—Blue in nitre at 800 deg. F., same as other bluing operations.

Lower-Band Spring

The lower-band spring, as shown in Fig. 1793, is to prevent the band from sliding down on the gunstock, if for any reason the binding screw should be loosened. This spring allows the band to be slid over it, but catches it in the notch shown and prevents its removal unless the spring is pushed into the stock.

This piece, which is rather difficult to machine, owing to the round stud at right angles to the spring itself, is finished with a hand mill; and the spring itself is machined all over. It is then necessary to "set" the spring, and an ingenious little bench fixture is used for this purpose.

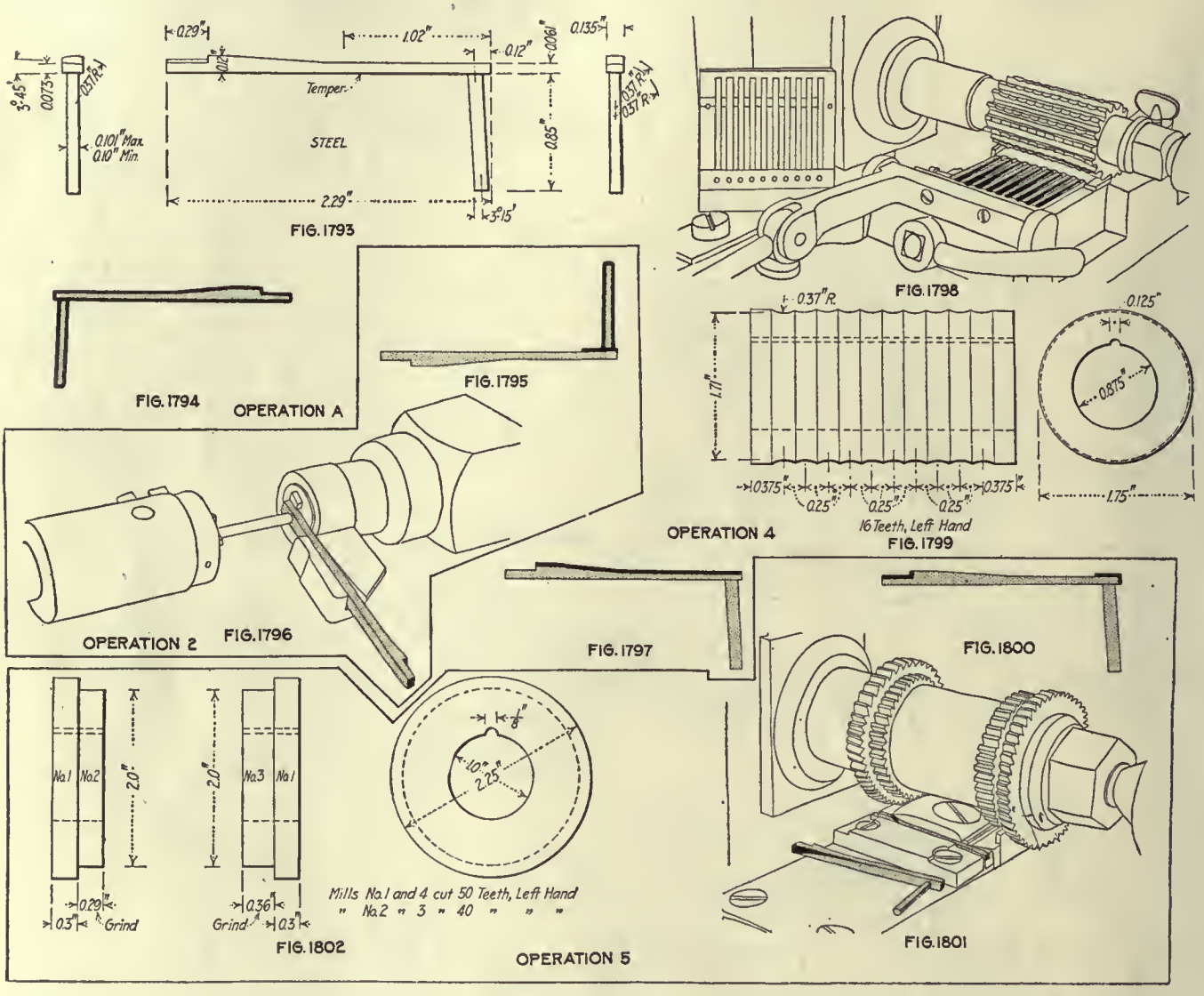

OPERATIONS ON THE LOWER-BAND SPRING

Operation	
A	Forging from bar
B	Annealing
B–1	Pickling
C	Trimming
D	Cold dropping
2	Milling pivot to size
4	Milling right side lengthwise
5	Milling ends and shoulder to length
AA	Removing burrs left by operation 5
1	Buffing left side
2½	Buffing top and bottom edges
3	Filing, general cornering
6	Setting spindle on angle
7	Tempering and hardening
8	Polishing right side and top and bottom edges and cornering end of spindle (on buff wheel)
9	Bluing

OPERATION A. FORGING FROM BAR

Transformation—Fig. 1794. Number of Operators—One. Description of Operation—Shaping from bar. Apparatus and Equipment Used—Billings & Spencer 400-lb. drop hammer Production—125 pieces per hr.

OPERATION B. ANNEALING

Number of Operators—One. Description of Operation—Same as all previous annealing operations; same equipment, etc., used.

OPERATION B-1. PICKLING

Number of Operators—One. Description of Operation—Same as all previous pickling operations; same equipment, etc., used as previously described.

OPERATION C. TRIMMING

Machine Used—Snow-Brooks No. 1 press, 1½-in. stroke. Number of Operators per Machine—One. Punches and Punch Holders—Round shank. Dies and Die Holders—Setscrew in shoe. Stripping Mechanism—Pushed down through die. Average Life of Punches and Dies—15,000 pieces. Production—650 pieces per hr.

OPERATION D. COLD DROPPING

Number of Operators—One. Description of Operation—Straightening after trimming. Apparatus and Equipment Used—Billings & Spencer 400-lb. drop hammer. Production—600 pieces per hr.

OPERATION 2. MILLING PIVOT TO SIZE

Transformation—Fig. 1795. Machine Used—Machine built at Hill shop. Number of Operators per Machine—One. Work-Holding Devices—Set on block in tailstock, Fig. 1796. Tool-Holding Devices—In screw chuck. Cutting Tools—Hollow mill, 0.102 in. in inside diameter. Number of Cuts—One. Cut Data—450 r.p.m.; hand feed. Coolant—Cutting oil, ⅛-in. stream. Average Life of Tool Between Grindings—250 pieces. Gages—Diameter and length of pivot. Production—350 pieces per hr.

OPERATION 4. MILLING RIGHT SIDE LENGTHWISE

Transformation—Fig. 1797. Machine Used—Ames Manufacturing Co. Number of Operators per Machine—One. Work-Holding Devices—Work held in block, 10 to a block, Fig. 1798; block clamped by vise jaws; a bridge fixture is raised to give proper form. Tool-Holding Devices—Standard arbor. Cutting Tools—Multiple milling cutter, Fig. 1799. Number of Cuts—One. Cut Data—70 r.p.m.; ⅝-in. feed. Coolant—Cutting oil, put on with brush. Average Life of Tool Between Grindings—5000 pieces. Gages—Thickness and form. Production—175 pieces per hr.

OPERATION 5. MILLING ENDS AND SHOULDER TO LENGTH

Transformation—Fig. 1800. Machine Used—Miller built at Hill shop. Number of Machines per Operator—Two. Work-Holding Devices—Held by vise jaws, Fig. 1801. Tool-Holding Devices—On arbor. Cutting Tools—Milling cutters, Fig. 1802. Number of Cuts—One. Cut Data—70 r.p.m.; ⅝-in. feed. Coolant—Cutting oil, put on with brush. Average Life of Tool Between Grindings—5000 pieces. Gages—Thickness and length. Production—100 pieces per hr.

OPERATION AA. REMOVING BURRS LEFT BY OPERATION 5

Number of Operators—One. Description of Operation—Removing burrs left by operation 5. Apparatus and Equipment Used—File. Production—Grouped with operation 5.

OPERATION 1. BUFFING LEFT SIDE

Transformation—Fig. 1803. Number of Operators—One. Description of Operation—Buffing sides. Apparatus and Equipment Used—Buff wheel on special vertical spindle, Fig. 1804. Gages—None. Production—350 pieces per hr.

OPERATION 2½. BUFFING TOP AND BOTTOM

Transformation—Fig. 1805. Number of Operators—One. Description of Operation—Buffing top and bottom. Apparatus and Equipment Used—Similar to Fig. 1804, but with special holder. Gages—Thickness. Production—60 pieces per hr.

OPERATION 3. FILING, GENERAL CORNERING

Number of Operators—One. Description of Operation—Filing and general cornering. Apparatus and Equipment Used—File. Production—90 pieces per hr.

in the under side of the gunstock, just in front of the butt plate, and carries the lower swivel for the band by which the rifle is slung over the shoulder. This swivel is bent up from a straight rod about 0.16 in. in diameter and assembled in place. An opening is left between the points of the swivel so that a pin, forced into the plate between these points, effectually prevents end movement.

Both the lower-band swivel, Fig. 1825, and the stacking swivel, detail in Fig. 1838, are made from drop forgings. The lower-band swivel is of Class B steel, 0.47 in. round, while the stacking swivel is of Class D steel of the same size. These parts are drop forged, trimmed and swaged with suitable punches and dies, so that the only machining is on the lugs that fit between the ears of the upper and lower bands.

The stacking swivel has a piece cut out so as to allow three guns to be stacked by hooking the swivels together.

FIG. 1803

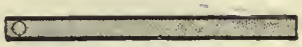

FIG. 1805

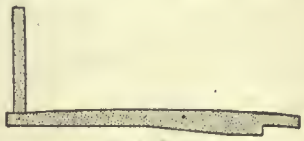

FIG. 1806

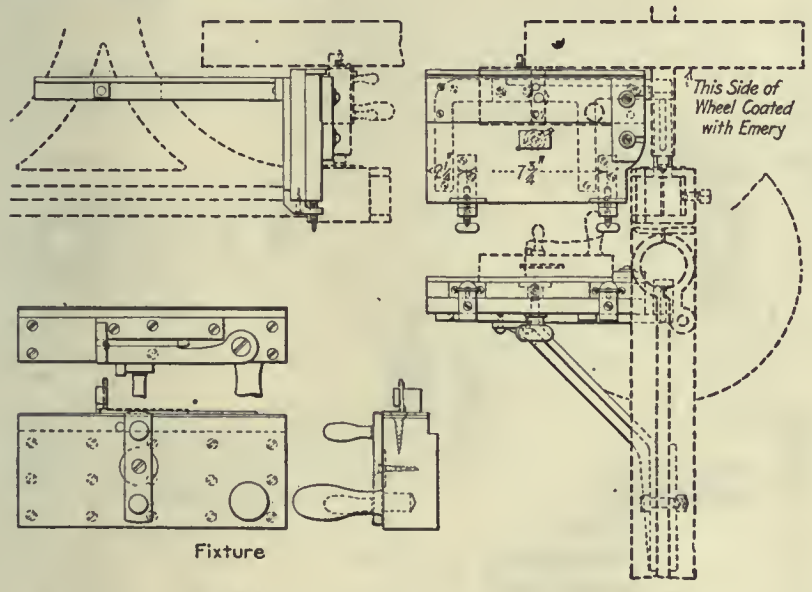

FIG. 1807A

FIG. 1804

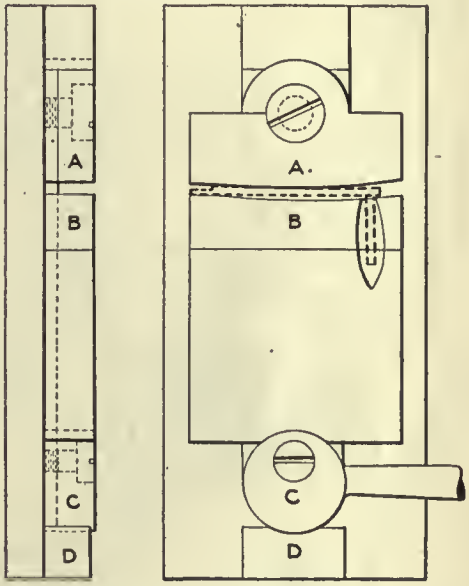

FIG. 1807

OPERATION 6. SETTING SPINDLE ON ANGLE

Number of Operators—One. Description of Operation—The spindle of the spring is placed in the opening of jaws B, and the jaw A is drawn in by the cam C, working against the block D, Fig. 1807. Apparatus and Equipment Used—Bench bending fixture, shown in Fig. 1807-A; jaw A and cam C fastened to a slide, so that the slide is moved in both directions by cam C.

OPERATION 7. TEMPERING AND HARDENING

Number of Operators—One. Description of Operation—Hardened in open oil fire at 1450 deg. F.; tempered in lead bath at 900 deg. F.

OPERATION 8. POLISHING RIGHT SIDE AND TOP AND BOTTOM EDGES AND CORNERING END OF SPINDLE (ON BUFF WHEEL)

Number of Operators—One. Description of Operation—Polishing sides and top. Apparatus and Equipment Used—Polishing jack and wheel. Production—90 pieces per hr.

OPERATION 9. BLUING

Description of Operation—Same as all other bluings.

Butt Swivel Plate

The butt swivel plate, as shown in detail in Fig. 1808, is made of Class D steel, 0.40 in. square, the same size and quality of material as was used for the extractor collar. This piece is a drop forging in which the screw holes are punched. The hole for the swivel and the retaining pin are both drilled in a suitable jig. The plate is located

The lower-band swivel has the thin slot through the lug to afford a spring or friction tension when tightened by the lower-band screw.

OPERATIONS ON THE BUTT SWIVEL PLATE

Operation	
A	Forging from bar
B	Annealing
B–1	Pickling
C	Trimming
D	Cold dropping
E	Surfacing
1	Punching screw holes
1½	Drilling swivel and pin holes
2	Reaming swivel and pin holes (1½, 2 and 3 grouped)
3	Counterboring screw holes
4	Profiling edges
CC	Removing burrs left by operation 4
5	Countersinking swivel hole
6	Polishing outer surface
7	Assembling with swivel and pin
8	Bluing

OPERATION A. FORGING FROM BAR

Transformation—Fig. 1809. Number of Operators—One. Description of Operation—Shaping from bar. Apparatus and Equipment Used—Billings & Spencer 400-lb. drop hammer. Production—350 pieces per hr.

OPERATION B. ANNEALING

Description of Operation—Same as previous annealing operations.

OPERATION B-1. PICKLING

Description of Operation—Same as all previous picklings.

OPERATION C. TRIMMING

Machine Used—Snow-Brooks No. 1; 1½-in. stroke. Number of Operators per Machine—One. Punches and Punch Holders—Round shank. Dies and Die Holders—In shoe, by setscrews. Stripping Mechanism—Pushed down through die. Average Life of Punches and Dies—About 15,000 pieces. Production—350 pieces per hr.

OPERATION D. COLD DROPPING

Number of Operators—One. Description of Operation—Straightening after trimming. Apparatus and Equipment Used—Billings & Spencer 400-lb. drop hammer. Production—600 pieces per hr.

OPERATION E. SURFACING

Transformation—Fig. 1810. Number of Operators—One. Description of Operation—Polishing bottom surface of butt swivel plate. Apparatus and Equipment Used—Horizontal polishing machine, built at Hill shops, and wood holder. Gages—None. Production—350 per hr.

OPERATION 3. COUNTERBORING SCREW HOLES

Transformation—Fig. 1815. Machine Used—Ames 16-in., single spindle. Number of Operators per Machine—One. Work-Holding Devices—Work held on block with pin to hold from swinging. Tool-Holding Devices—Drill chuck. Cutting Tools—Double-size four-flute reamer; point, 0.2126 in. in diameter; body, 0.2187 in. in diameter. Number of Cuts—One. Cut Data—450 r.p.m.; hand feed. Coolant—Cutting oil, ⅛-in. stream. Average Life of Tool Between Grindings—500 pieces. Gages—Plug for hole and counterbore. Production—350 pieces per hr.

OPERATION 4. PROFLING EDGES

Transformation—Fig. 1816. Machine Used—Garvin profiler. Number of Operators per Machine—One. Work-Holding Devices—Held on pins, which are also used to bind, Fig. 1817. Tool-Holding Devices—Taper shank. Cutting Tools—Taper profiling cutter. Number of Cuts—Two. Cut Data—1200 r.p.m.; hand feed. Coolant—Compound, ¼-in. stream. Average Life of Tool Between Grindings—200 pieces. Gages—Fig. 1818, form, diameter and location of holes with the profiling. Production—90 pieces per hr.

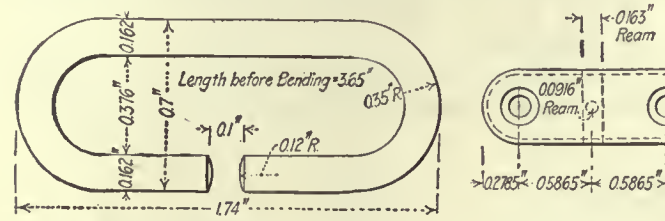

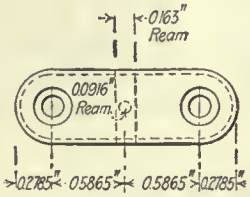

FIG. 1809
OPERATION A

FIG. 1810
OPERATION E

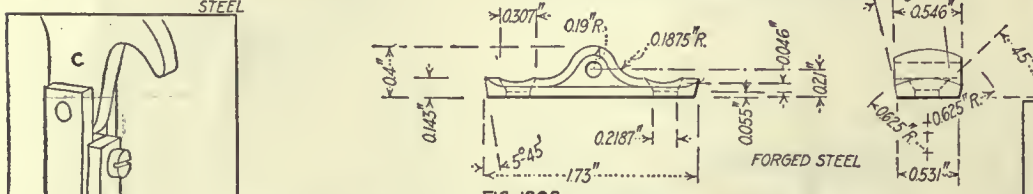

FIG. 1808

FIG. 1811
OPERATION 1

FIG. 1812

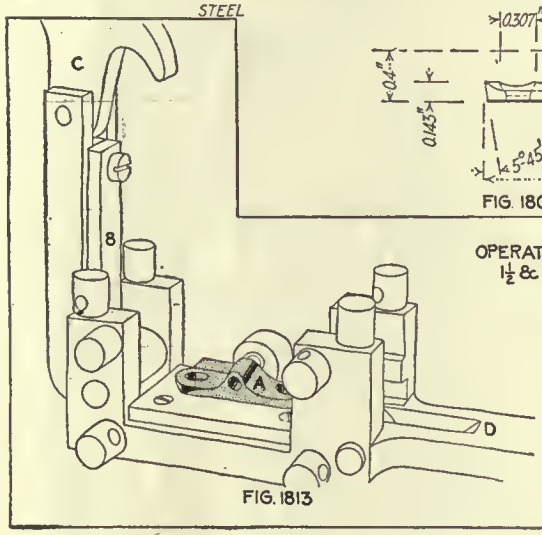

FIG. 1813

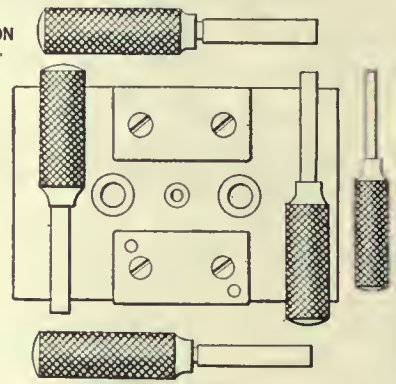

FIG. 1814

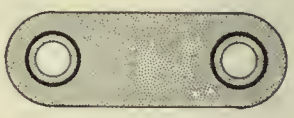

FIG. 1815
OPERATION 3

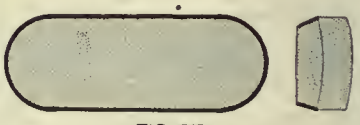

FIG. 1816

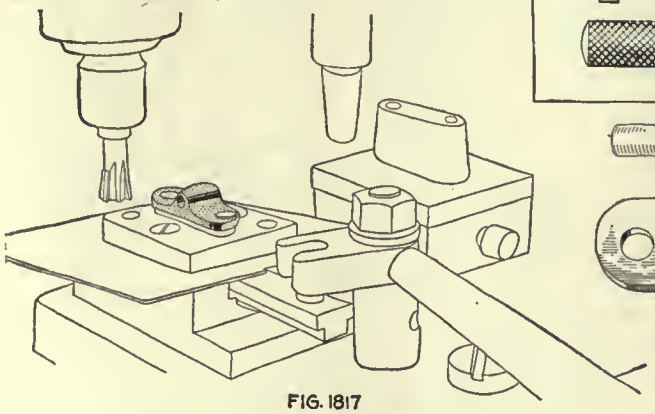

FIG. 1817

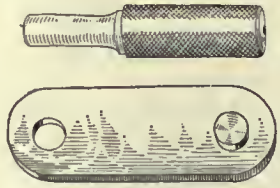

OPERATION 4

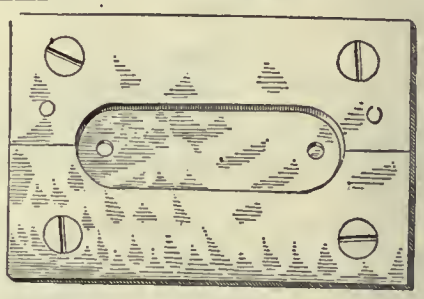

FIG. 1818

OPERATION 1. PUNCHING SCREW HOLES

Transformation—Fig. 1811. Machine Used—Garvin No. 1; 1½-in. stroke. Number of Operators per Machine—One. Punches and Punch Holders—Round shank. Dies and Die Holders—Held in shoe by setscrew. Stripping Mechanism—Steel strippers screwed to face of die. Average Life of Punches and Dies—5000 pieces. Production—650 pieces per hr.

OPERATIONS 1½ AND 2. DRILLING SWIVEL AND PIN HOLES; REAMING SWIVEL AND PIN HOLES

Transformation—Fig. 1812. Machine Used—Sigourney 16-in. two-spindle drilling machine. Number of Operators per Machine—One. Work-Holding Devices—Drill jig, Fig. 1813; work is located at A by pins in screw holes and held by plate B; hook C locks into D and holds work for drilling in two directions. Tool-Holding Devices—Drill chuck. Cutting Tools—Twist drills and two round-nose half-round reamers, one 0.0916 in., the other 0.163 in. in diameter. Number of Cuts—Two. Cut Data—750 r.p.m.; hand feed. Coolant—Cutting oil. ⅛-in. stream. Average Life of Tool Between Grindings—250 pieces. Gages—Fig. 1814, diameter and location of holes. Production—85 pieces per hr.

OPERATION CC. REMOVING BURRS LEFT BY OPERATION 4

Number of Operators—One. Description of Operation—Removing burrs from operation 4. Apparatus and Equipment Used—File. Production—Grouped with operation 4.

OPERATION 5. COUNTERSINKING SWIVEL HOLE

Transformation—Fig. 1819. Number of Operators—One. Description of Operation—Countersinking swivel hole. Apparatus and Equipment Used—Countersink and bench lathe; countersink, Fig. 1820. Gages—None. Production—2500 pieces per hr.

OPERATION 6. POLISHING OUTER SURFACE

Number of Operators—One. Description of Operation—Polishing outside surface. Apparatus and Equipment Used—Polishing jack and wheel. Production—50 pieces per hr.

OPERATION 7. BENDING SWIVEL AND ASSEMBLING

Transformation—Fig. 1821. Number of Operators—One. Description of Operation—Bending swivel from straight wire by means of fixture, Figs. 1822 and 1823. Apparatus and Equipment Used—Fixture screwed to bench; Fig. 1822 shows fixture open, and Fig. 1823, closed; the wire is clamped at the

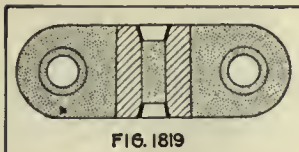

FIG. 1819

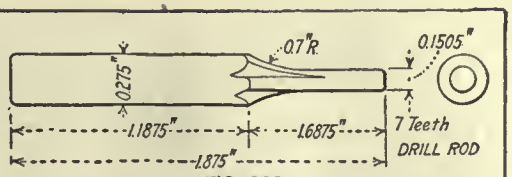

FIG. 1820

FIG. 1821

OPERATION 5

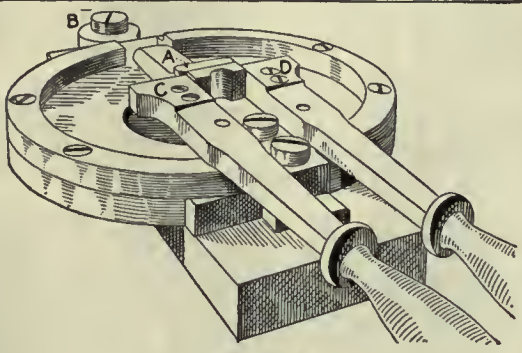

FIG. 1822

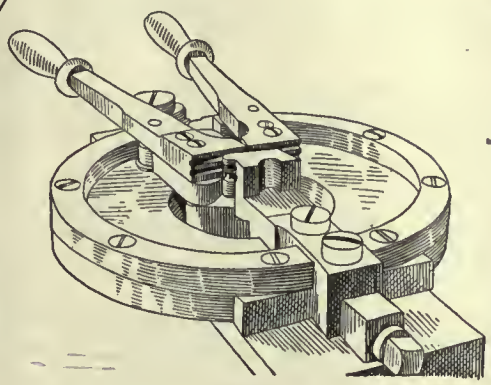

FIG. 1823

FIG. 1824

OPERATION 7

center by block A, operated by cam B; then levers C and D bend the ends of swivel to form around the center block. Gages—Fig. 1824, diameter, length and rounded end of butt swivel. Production—90 pieces per hr.

OPERATION 8. BLUING

Number of Operators—One. Description of Operation—Blue butt swivel plate in niter at 800 deg. F.

OPERATIONS ON THE LOWER-BAND SWIVEL, FIG. 1825

Operation

A	Blocking from bar
A–1	Pickling
B	First trimming, outside
C	Dropping to finish
C–1	Pickling
D	Second trimming, outside
D–1	Trimming
E	Annealing
E–1	Pickling
F	Cold dropping
DD	Swaging to size
1	Hand-milling both sides of lug
2	Drilling screw hole
3	Reaming screw hole
AA	Removing burrs left by operation 3
4	Milling first side of lug
5	Milling second side of lug
6	Milling friction slot
CC	Removing with reamers the burrs left by operation 6
A–1	Rotary-filing circle, inside
B–2	Buffing circle, outside
C–3	Tumbling
7	Filing both sides of lug and matching circle, outside, near lug
8	Polishing lug and circle, outside, near lug
8½	Spreading lug for tension
9	Tempering, hardening

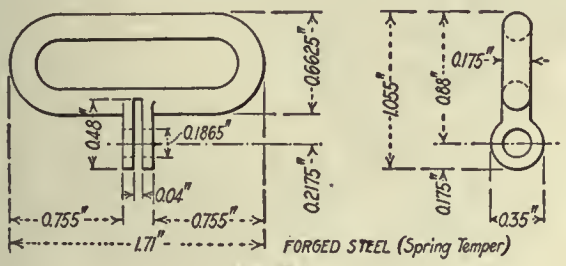

FIG. 1825

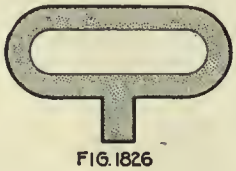

FIG. 1826

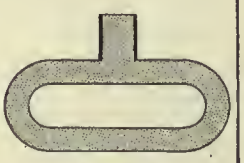

FIG. 1829

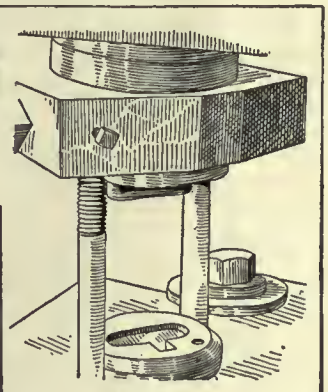

FIG. 1827

OPERATION A

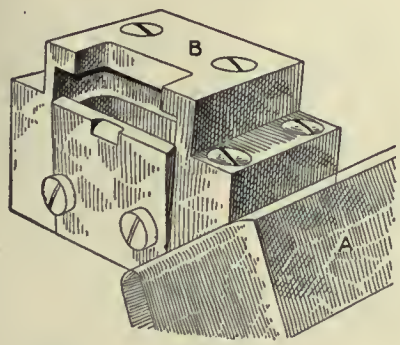

FIG. 1828

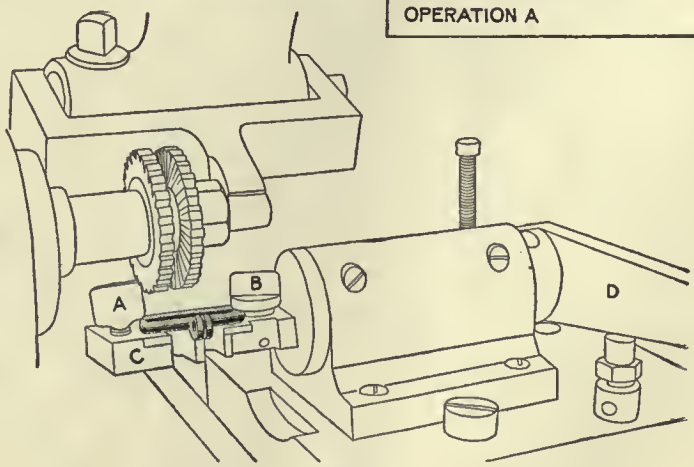

FIG. 1830

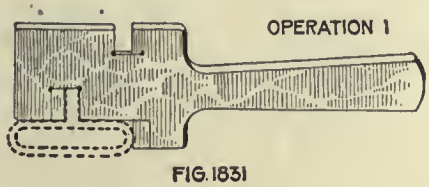

FIG. 1831

OPERATION A. BLOCKING FROM BAR

Transformation—Fig. 1826. Number of Operators—One. Description of Operation—Shaping from bar. Apparatus and Equipment Used—Billings & Spencer 400-lb. drop hammer. Production—175 pieces per hr.

OPERATION A-1. PICKLING

Description of Operation—Same as pickling previously described.

OPERATION B. FIRST TRIMMING, OUTSIDE

Machine Used—Niagara No. 36 press, 1½-in. stroke. Number of Operators per Machine—One. Punches and Punch Holders—Square shank. Dies and Die Holders—Held in shoe by setscrew. Stripping Mechanism—Pushed down through die. Average Life of Punches and Dies—15,000 pieces. Production—700 pieces per hr.

OPERATION C. DROPPING TO FINISH

Number of Operators—One. Description of Operation—Finish shaping. Apparatus and Equipment Used—Billings & Spencer 400-lb. drop hammer. Production—175 pieces per hr.

OPERATION C-1. PICKLING

Number of Operators—One. Description of Operation—Placed in wire baskets and put in the pickling solution, which consists of 1 part sulphuric acid and 9 parts water; left in this for from 10 to 12 min. Apparatus and Equipment Used—Wire baskets, wooden pickling tanks, hand hoist.

OPERATIONS D AND D-1. SECOND TRIMMING, INSIDE AND OUTSIDE

Machine Used—Perkins No. 40 press. Number of Operators per Machine—One. Punches and Punch Holders—Round shank. Dies and Die Holders—In shoe, by setscrews; trimming outside and inside at one operation; dies shown in Fig. 1827. Stripping Mechanism—Guide pins at side of die are used in stripping; the collar, which lies over the die, is forced up by the pins on the return of the press, forcing the work off the die. Production—650 pieces per hr.

OPERATION E. ANNEALING

Number of Operators—One. Description of Operation—Put in iron pots packed with powdered charcoal and heated to 850 deg. C. (1562 deg. F.) and left over night to cool. Apparatus and Equipment Used—Cast-iron pots, Brown & Sharpe annealing furnace, oil burner, powdered charcoal.

OPERATION E-1. PICKLING

Description of Operation—Same as previous pickling.

OPERATION F. COLD DROPPING

Number of Operators—One. Description of Operation—Straightening after trimming. Apparatus and Equipment Used—Billings & Spencer 400-lb. drop hammer. Production—600 pieces per hr.

OPERATION DD. SWAGING TO SIZE

Machine Used—Old crank draw press, made in Frankfort. Number of Operators per Machine—One. Punches and Punch Holders—Round shank, which holds punch A, Fig. 1828. Dies and Die Holders—Screwed to plate, bolted to bed of press B, Fig. 1828. Stripping Mechanism—Steel stripper screwed to face of die. Production—350 pieces per hr.

OPERATION 1. HAND-MILLING BOTH SIDES OF LUG

Transformation—Fig. 1829. Machine Used—Garvin No. 3 hand miller. Number of Operators per Machine—One. Work-Holding Devices—Held in rotating fixture, Fig. 1830; thumbscrews A and B hold work to plate C, while lever D rotates the work under the milling cutters. Tool-Holding Devices—Standard arbor. Cutting Tools—Straddle-milling cutters. Number of Cuts—One. Cut Data—450 r.p.m.; hand feed. Coolant—Cutting oil, put on with brush. Average Life of Tool Between Grindings—5000 pieces. Gages—Fig. 1831, width of lug and location from ends. Production—350 pieces per hr.

Stacking Swivel, Hand-Guard Clip, Front-Sight Cover, Cleaning Rods

These are small parts which could easily be made in small shops in case of emergency. The swivels could be made more cheaply by being built up with oxyacetylene instead of from forgings. The hand guard clips, and front sight cover are sheet metal stampings and are produced as shown. The cleaning rods are largely automatic screw machine jobs.

OPERATIONS 2 AND 3. DRILLING SCREW HOLE AND REAMING

Transformation—Fig. 1832. Machine Used—Pratt & Whitney four-spindle 16-in. upright drilling machine. Number of Operators per Machine—One. Work-Holding Devices—Drill jig, Fig. 1833; work held by button A, pushed to place by screw B. Tool-Holding Devices—Drill chuck. Cutting Tools—Twist drill. Number of Cuts—One. Cut Data—750 r.p.m.; hand feed. Coolant—Cutting oil, $\frac{1}{16}$-in. stream. Average Life of Tool Between Grindings—200 pieces. Gages—Plugs for hole and surface. Production—120 pieces per hr.

OPERATION AA. REMOVING BURRS FROM OPERATION 3

Number of Operators—One. Description of Operation—Removing burrs from operation 3. Apparatus and Equipment Used—File. Production—Grouped with operations 4 and 5.

OPERATIONS 4 AND 5. MILLING FIRST AND SECOND SIDES OF LUG

Transformation—Fig. 1834. Machine Used—Pratt & Whitney No. 2 Lincoln miller. Number of Machines per Operator—Four. Work-Holding Devices—Held on pin clamped by vise jaws, Fig. 1835; one cutter mills one side while other handles the reverse. Tool-Holding Devices—Standard arbor. Cutting Tools—Formed milling cutters. Number of Cuts—One. Cut Data—70 r.p.m.; $\frac{5}{8}$-in. feed. Coolant—Cutting oil, put on with brush. Average Life of Tool Between Grindings—5000 pieces. Gages—Radius from screw hole, and contour. Production—120 pieces per hr.

OPERATION 6. MILLING FRICTION SLOT

Transformation—Fig. 1836. Machine Used—Garvin No. 3 hand miller. Number of Operators per Machine—One. Work-Holding Devices—Held on pin clamped by jaws A and B and screw C, Fig. 1837. Tool-Holding Devices—Standard arbor. Cutting Tools—Slitting saws, 2.5625 in. in diameter, 0.04 in. thick, 40 teeth. Number of Cuts—One. Cut Data—450 r.p.m.; hand feed. Coolant—Cutting oil, $\frac{1}{16}$-in. stream. Average Life of Tool Between Grindings—1500 pieces. Gages—None. Production—125 pieces per hr.

OPERATION CC. REMOVING WITH REAMER THE BURRS LEFT BY OPERATION 6

Number of Operators—One. Description of Operation—Removing burrs from operation 6. Apparatus and Equipment Used—Hand reamer. Production—700 pieces per hr.

OPERATION A-1. ROTARY-FILING CIRCLES INSIDE

Number of Operators—One. Description of Operation—Rotary-filing inside of circle. Apparatus and Equipment Used—Small rotary file. Gages—None. Production—175 pieces per hr.

OPERATION B-2. BUFFING CIRCLE, OUTSIDE

Number of Operators—One. Description of Operation—Buffing outside and ends of band. Apparatus and Equipment Used—Polishing jack and wheel. Production—350 pieces per hr.

OPERATION C-3. TUMBLING

Number of Operators—One. Description of Operation—Tumbling. Apparatus and Equipment Used—Tumbling boxes. Production—500 pieces per hr.

OPERATION 7. FILING BOTH SIDES OF LUG AND MATCHING CIRCLE, OUTSIDE, NEAR LUG

Number of Operators—One. Description of Operation—Filing sides of lug and matching circle. Apparatus and Equipment Used—File. Production—190 pieces per hr.

OPERATION 8. POLISHING LUG AND CIRCLE, OUTSIDE, NEAR LUG

Number of Operators—One. Description of Operation—Polishing circle and lug. Apparatus and Equipment Used—Buffing wheel. Production—175 pieces per hr.

OPERATION 8½. SPREADING LUG FOR TENSION

Number of Operators—One. Description of Operation—Spreading lugs. Apparatus and Equipment Used—Hammer and wedge. Production—500 pieces per hr.

OPERATION 9. TEMPERING AND HARDENING

Number of Operators—One. Description of Operation—Hardened in open fire at 1450 deg. F.; tempered in lead bath at 900 deg. F.

Stacking Swivel

The stacking swivel is a small part that requires many operations. It is made from a drop forging and is finished all over. Its function is to allow the stacking of three rifles, either in camp or during halts on the march.

*Copyright, 1917, McGraw-Hill Publishing Co., Inc.

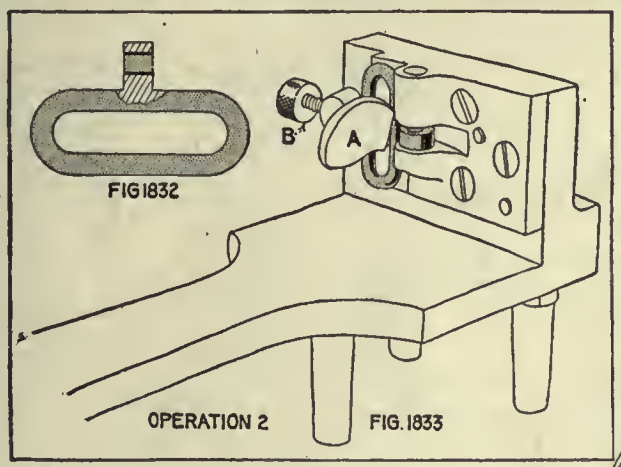

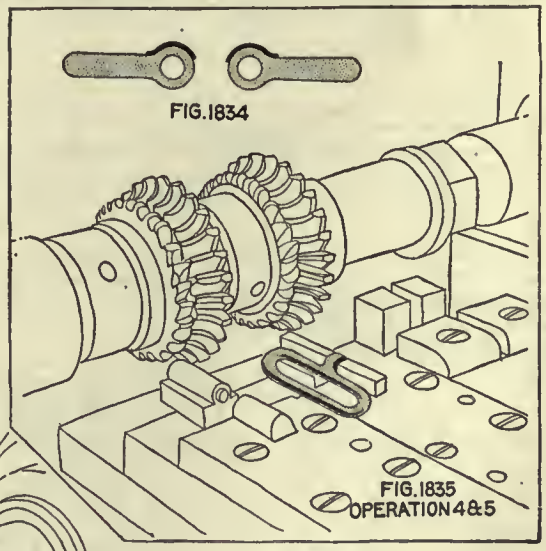

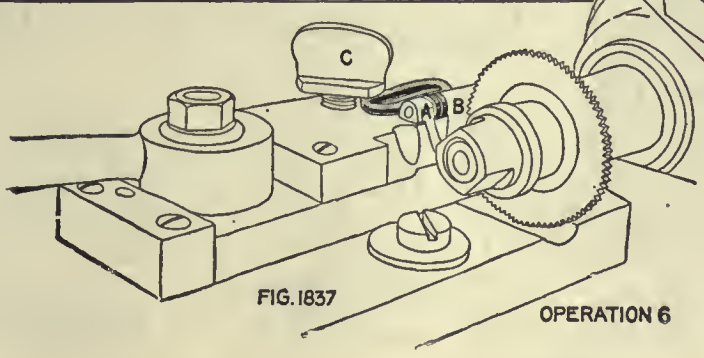

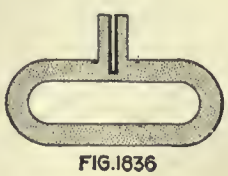

OPERATIONS ON THE STACKING SWIVEL

Operation

A	Blocking from bar
A–1	Pickling
B	First trimming outside
C	Dropping to finish
C–1	Pickling
D	Third trimming, outside
E	Annealing
E–1	Pickling
F	Cold dropping
CC	Swaging to size
1	Hand-milling both sides of lug (straddle)
2	Drilling screw hole
3	Reaming screw hole
AA	Removing burrs left by operation 3
4	Milling first side of lug
5	Milling side of lug
6	Milling stacking slot
BB	Removing burrs left by operations 4 and 5 (reamer)
A–1	Rotary-filing circle, inside
B–2	Buffing circle, outside
C–2	Tumbling
7	Milling, rounding ends of stacking slot (in lathe)
8	Filing both sides of lug and latching circle, outside, near lug
9	Polishing
10	Bluing

OPERATION A. BLOCKING FROM BAR

Transformation—Fig. 1839. Number of Operators—One. Description of Operation—Shaping from bar. Apparatus and Equipment Used—Billings & Spencer 400-lb. drop hammer. Production—175 pieces per hr.

OPERATION A-1. PICKLING

Number of Operators—One. Description of Operation—Put in wire baskets and placed in the pickling solution, which consists of 1 part sulphuric acid and 9 parts water, and left in this for from 10 to 12 min. Apparatus and Equipment Used—Wire baskets, wooden pickling tanks, hand hoist.

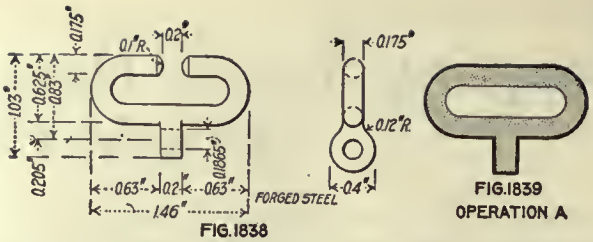

FIG. 1838

FIG. 1839
OPERATION A

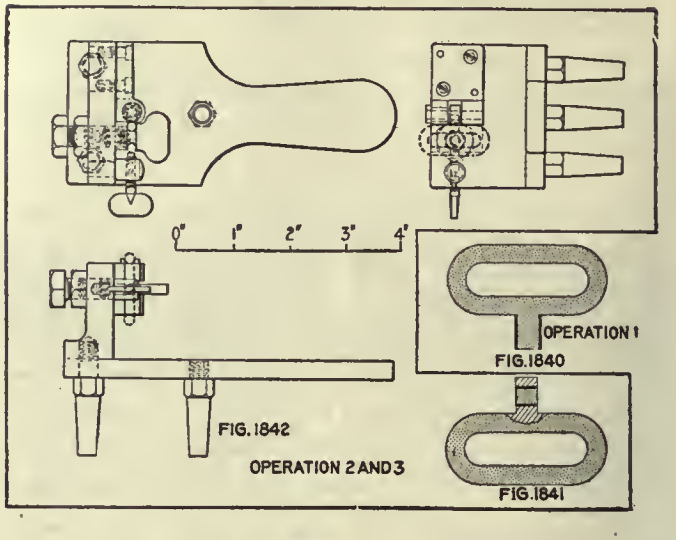

FIG. 1840

FIG. 1842

FIG. 1841

FIG. 1843

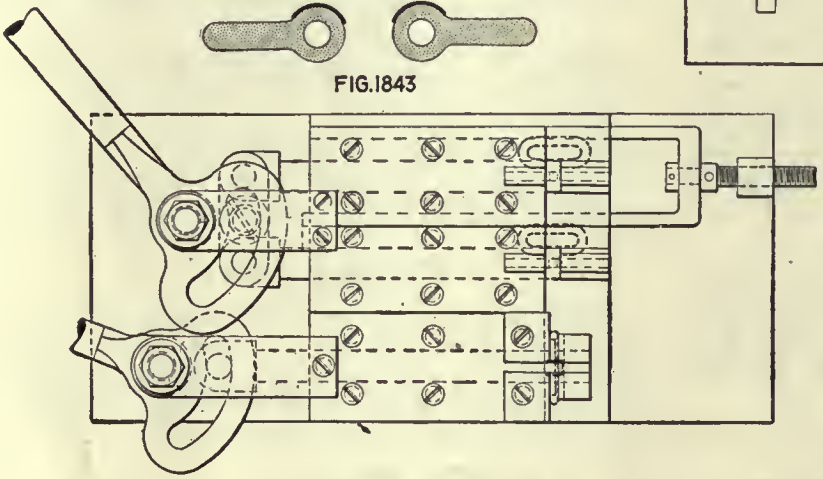

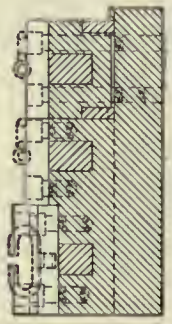

FIG. 1846

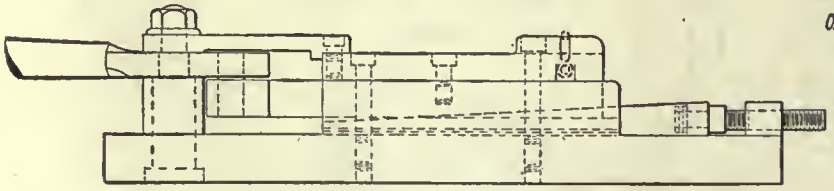

FIG. 1844

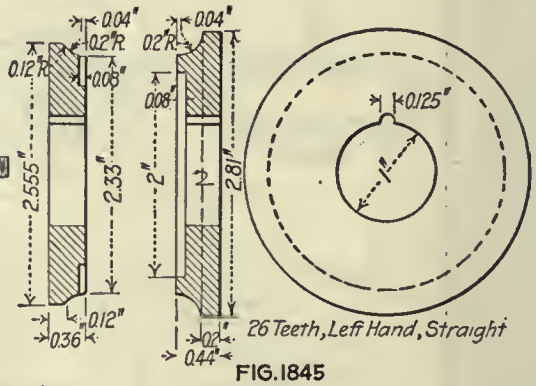

FIG. 1845

FIG. 1843, 1844 & 1845 OPERATION 4 & 5
FIG. 1846 & 1847 OPERATION 6
FIG. 1848 & 1849 OPERATION 7

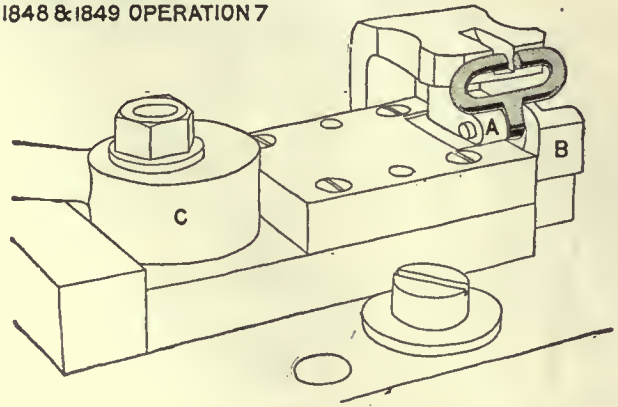

FIG. 1847

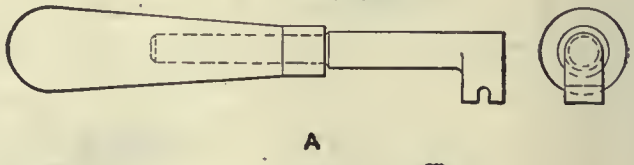

A

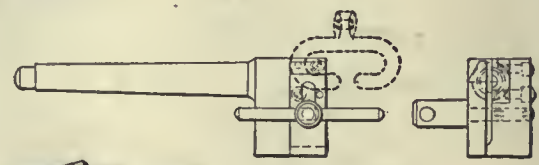

FIG. 1848

FIG. 1849

OPERATION B. FIRST TRIMMING

Machine Used—Perkins No. 40 press. Number of Operators per Machine—One. Punches and Punch Holders—Square shank. Dies and Die Holders—In shoe, by setscrew. Average Life of Punches and Dies—15,000 pieces. Production—700 pieces per hr.

OPERATION C. DROPPING TO FINISH

Number of Operators—One. Description of Operation—Finish shaping. Apparatus and Equipment Used—Billings & Spencer 400-lb. drop hammer. Production—175 pieces per hr.

OPERATION C-1. PICKLING

Description of Operation—Same as previous pickling.

OPERATION D. THIRD TRIMMING, OUTSIDE

Description of Operation—Same as operation B, already described.

OPERATION E. ANNEALING

Number of Operators—One. Description of Operation—Placed in iron pots packed with powdered charcoal and heated to 850 deg. C. (1562 deg. F.) and left over night to cool. Apparatus and Equipment Used—Iron pots, Brown & Sharpe annealing furnace, oil burners, powdered charcoal.

OPERATION E-1. PICKLING

Number of Operators—One. Description of Operation—Same as previous pickling.

OPERATION F. COLD DROPPING

Number of Operators—One. Description of Operation—Straightening after trimming. Apparatus and Equipment Used—Billings & Spencer 400-lb. drop hammer. Production—600 pieces per hr.

OPERATION CC. SWAGING TO SIZE

Machine Used—Old crank draw press. Number of Operators per Machine—One. Punches and Punch Holders—Round-shank swaging punch. Dies and Die Holders—Die screwed to plate; plate bolted to bed of press. Stripping Mechanism—Steel stripper screwed to face of die. Lubricant—A little oil on punch. Production—350 pieces per hr.

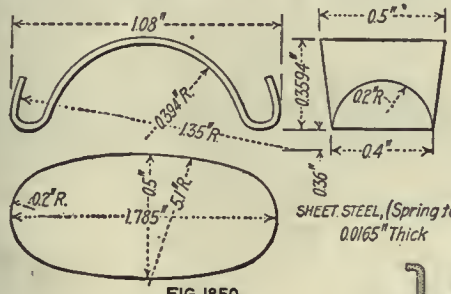

FIG. 1850

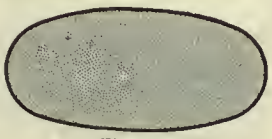
FIG. 1851

FIG. 1852

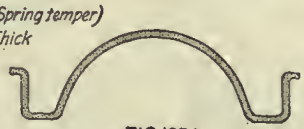
FIG. 1854

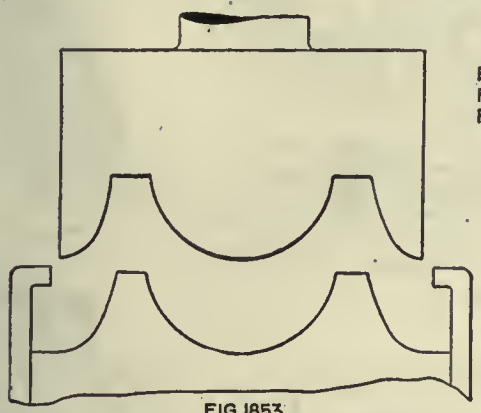
FIG. 1853

FIG. 1851 OPERATION 1
FIG. 1852 & 1853 OPERATION 2
FIG. 1854 & 1855 OPERATION 3

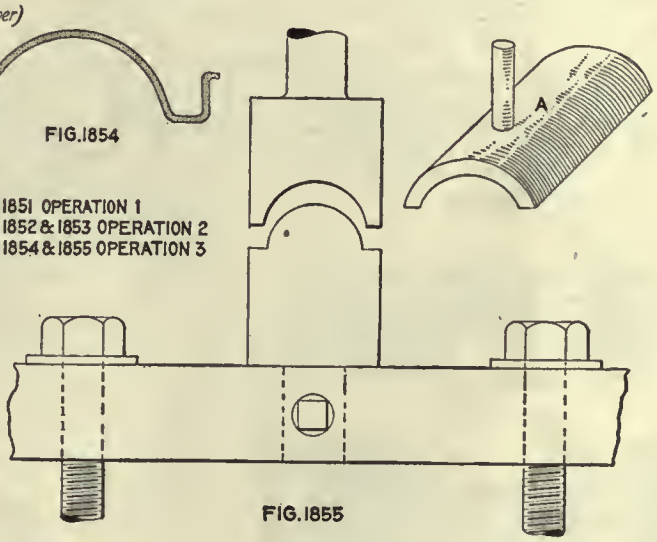

FIG. 1855

OPERATION 1. HAND-MILLING BOTH SIDES OF LUG (STRADDLE)

Transformation—Fig. 1840. Machine Used—Garvin No. 3 hand miller. Number of Operators per Machine—One. Work-Holding Devices—Rotating fixture, similar to those shown previously. Tool-Holding Devices—Standard arbor. Cutting Tools—Cutting mills. Number of Cuts—One. Cut Data—450 r.p.m.; hand feed. Coolant—Cutting oil, put on with brush. Average Life of Tool Between Grindings—5000 pieces. Gages—Similar to gage, Fig. 1831. Production—350 pieces per hr.

OPERATIONS 2 AND 3. DRILLING AND REAMING SCREW HOLES

Transformation—Fig. 1841. Machine Used—Pratt & Whitney 16-in. three-spindle upright drilling machine. Number of Operators per Machine—One. Work-Holding Devices—Drill jig, Fig. 1842. Tool-Holding Devices—Drill chuck. Cutting Tools—Twist drill and reamer. Number of Cuts—One. Cut Data—750 r.p.m.; hand feed. Coolant—Cutting oil, $\frac{1}{8}$-in. stream. Average Life of Tool Between Grindings—200 pieces. Gages—Diameter and clearance for outside of boss. Production—120 pieces per hr. Note—Feed is obtained by means of foot lever; while hole is being drilled, the operator reams by hand on next spindle, holding work in hand.

OPERATION AA. REMOVING BURRS LEFT BY OPERATION 3

Number of Operators—One. Description of Operation—Removing burrs from operation 3. Apparatus and Equipment Used—File. Production—Grouped with operations 4 and 5.

OPERATIONS 4 AND 5. MILLING SIDES OF LUG

Transformation—Fig. 1843. Machine Used—Pratt & Whitney No. 2 Lincoln miller. Number of Machines per Operator—Four. Work-Holding Devices—Held on pin clamped by vise jaws, similar to Fig. 1830; details in Fig. 1844. Tool-Holding Devices—Standard arbor. Cutting Tools—Formed milling cutters, Fig. 1845. Number of Cuts—One. Cut Data—70 r.p.m.; $\frac{5}{8}$-in. feed. Coolant—Cutting oil, put on with brush. Average Life of Tool Between Grindings—5000 pieces. Gages—Same as for lower-hand swivel, Fig. 1831. Production—120 pieces per hr.

OPERATION 6. MILLING STACKING SLOT

Transformation—Fig. 1846. Machine Used—Garvin No. 5 hand miller. Number of Operators per Machine—One. Work-Holding Devices—Held on pin A, clamped by vise jaws B and cam C in upright position with support at rear of swivel, Fig. 1847. Tool-Holding Devices—Standard arbor. Cutting Tools—Slotting cutter, 2.25 in. in diameter, 0.2 in. thick, 20 teeth, left hand. Number of Cuts—One. Cut Data—450 r.p.m.; hand feed. Coolant—Cutting oil, put on with brush. Average Life of Tool Between Grindings—5000 pieces. Gages—None. Production—350 pieces per hr.

OPERATION BB. REMOVING BURRS LEFT BY OPERATIONS 4 AND 5 (REAMER)

Number of Operators—One. Description of Operation—Removing burrs from operations 4 and 5. Apparatus and Equipment Used—File. Production—Grouped with operation 6.

OPERATION A-1. ROTARY-FILING CIRCLE, INSIDE

Number of Operators—One. Description of Operation—Rotary-filing inside of circle. Apparatus and Equipment Used—Rotary file. Gages—None. Production—125 pieces per hr.

OPERATION B-2. BUFFING CIRCLE, OUTSIDE

Number of Operators—One. Description of Operation—Buffing outside of swivel. Apparatus and Equipment Used—Buffing wheel. Gages—None. Production—350 pieces per hr.

OPERATION C-2. TUMBLING

Number of Operators—One. Description of Operation—Brightened by tumbling. Apparatus and Equipment Used—Home-made tumbling machine; tumbled in old screws, washers, then later in sawdust and pieces of belting.

OPERATION 7. MILLING, ROUNDING ENDS OF STACKING SLOT (IN LATHE)

Transformation—Fig. 1848. Machine Used—Prentice speed lathe. Number of Operators per Machine—One. Work-Holding Devices—Held in holder A, Fig. 1849, by thumb-screw in tailstock of lathe. Tool-Holding Devices—Drill chuck. Cutting Tools—Formed hollow mill B, Fig. 2143. Cut Data—450 r.p.m.; hand feed. Coolant—Cutting oil, put on with brush. Average Life of Tool Between Grindings—350 pieces. Gages—None. Production—170 pieces per hr. Note—The end is offset for this operation and bent back after the work is finished.

OPERATION 8. FILING BOTH SIDES OF LUG AND LATCHING CIRCLE, OUTSIDE, NEAR LUG

Number of Operators—One. Description of Operation—Filing lugs at sides and blending circle near lug. Apparatus and Equipment Used—File. Production—125 pieces per hr.

OPERATION 9. POLISHING

Number of Operators—One. Description of Operation—Polishing outside surfaces. Apparatus and Equipment Used—Polishing jack and wheel. Production—125 pieces per hr.

OPERATION 10. BLUING

Number of Operators—One. Description of Operation—Blue in niter at 800 deg. F. Apparatus and Equipment Used—Same as for all other bluing.

Hand-Guard Clips

The hand-guard clips, as shown in detail in Fig. 1850, are made from sheet spring steel so formed as to fit recesses in the hand guard, their object being to prevent the hand guard from splitting or to hold it together in case it should become split in service. These hand guards are quite thin and are made of black walnut or whatever wood is used for the stock. Two of these clips are used on each guard, being fitted into recesses that prevent the interference of the hand guard and the barrel. They are made in a punch press with a simple bending die.

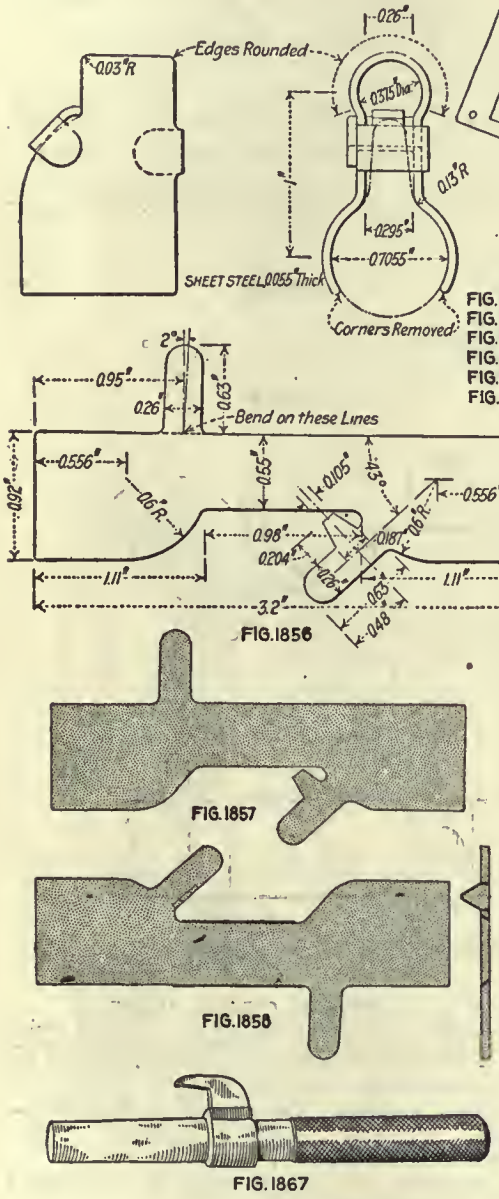

FIG. 1856

FIG. 1857

FIG. 1858

FIG. 1867

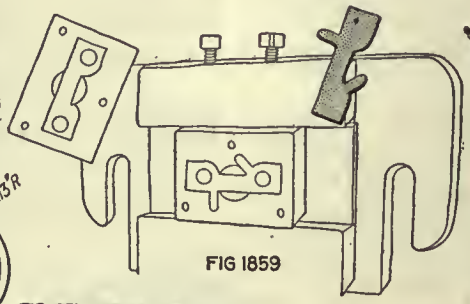

FIG 1859

FIG. 1860

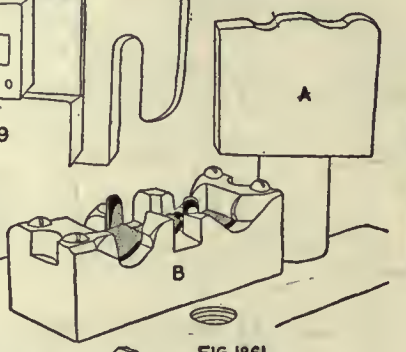

FIG. 1861

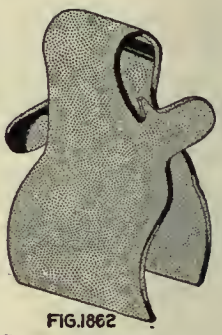

FIG. 1862

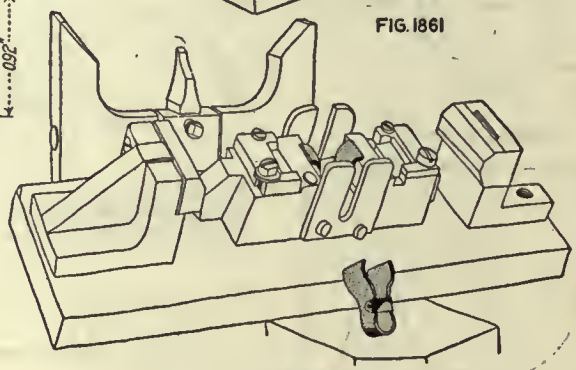

FIG. 1863

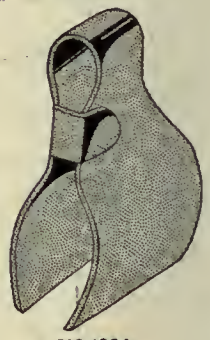

FIG. 1864

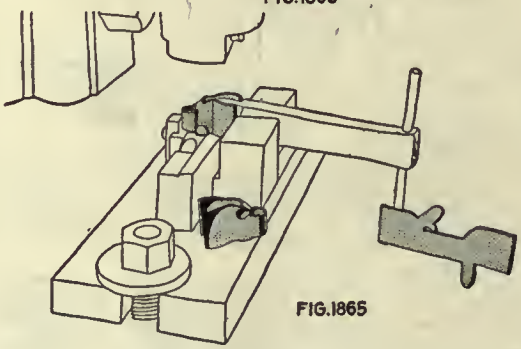

FIG. 1865

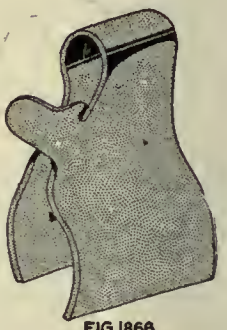

FIG. 1866

OPERATIONS ON THE HAND-GUARD CLIPS

Operation

1 Blanking
2 First bending
3 Second bending
4 Tempering and hardening
5 Assembling to hand guard

OPERATION 1. BLANKING

Machine Used—Perkins automatic No. 5, roll feed, 1½-in. stroke. Number of Machines per Operator—Two. Punches and Punch Holders—Square shank. Dies and Die Holders—Held in shoe by setscrew. Stripping Mechanism—Steel stripper screwed to face of die. Lubricant—Stock oiled with cutting oil. Production—1250 per hr.

OPERATION 2. FIRST BENDING

Transformation—Fig. 1852. Machine Used—Niagara No. 36, 1½-in. stroke. Number of Operators per Machine—One. Punches and Punch Holders—Square shank, punch shown in Fig. 1853. Dies and Die Holders—Held on plate by setscrews; plate screwed to bed of press; stops on each side of die. Stripping Mechanism—None. Gages—None. Production—800 pieces per hr.

OPERATION 3. SECOND BENDING

Transformation—Fig. 1854. Machine Used—Same press as operation 2. Number of Operators per Machine—One. Punches and Punch Holders—Square-shank punch, Fig. 1855. Dies and Die Holders—Held on plate by setscrews; plate bolted to bed of press. Stripping Mechanism—None. Lubricant—None. Production—800 pieces per hr. Note—A holder or form A, Fig. 1855, is held in hand and placed over spring, which gives shape to ears.

OPERATION 4. TEMPERING AND HARDENING

Number of Operators—One. Description of Operation—Hardened in open fire at 1450 deg. F.; tempered in niter at 800 deg. F.

OPERATION 5. ASSEMBLING TO HAND GUARD

The clip is simply put in place by hand, the recess in guard being coated with cosmoline.

Front-Sight Cover

The front-sight cover, Fig. 1856, is used to protect the front sight in field and other service. This was formerly made of sheet brass but is now of sheet steel pressed into place and has the lower ends bent so as to spring round

the front-sight stud. It is made from a sheet-steel stamping and pressed into shape with suitable forming dies.

OPERATIONS ON THE FRONT-SIGHT COVER

Operations

1 Blanking from low sheet steel
1½ Pressing radii on edges, rounding corner of top and bend sight prong
2 Bending flanks to fit barrel and bending prongs
3 Bending flanks together to fit barrel
4 Bending down front prongs
5 Bending down rear prongs
7-A Correcting
9 Caseharden

OPERATION 1. BLANKING FROM LOW SHEET STEEL

Transformation—Fig. 1856. Machine Used—Perkins No. 19 press. Number of Operators per Machine—One. Punches and Punch Holders—Round shank. Dies and Die Holders—Held in shoe between screws; pierce and blank, using finger stop. Stripping Mechanism—Steel strippers screwed to face of die. Average Life of Punches and Dies—20,000 pieces. Lubricant—Stock oiled with cutting oil. Production—1500 pieces per hr.

OPERATION 1½. PRESSING RADII ON EDGES, ROUNDING CORNER OF TOP AND BEND SIGHT PRONG

Transformation—Fig. 1858. Machine Used—Niagara No. 36, 1½-in. stroke. Number of Operators per Machine—One. Punches and Punch Holders—Square shank. Dies and Die Holders—Held in shoe by setscrew; shoe bolted to bed of press, Fig. 1859. Stripping Mechanism—Two spring pins in punch to strip work from punch. Lubricant—None. Production—600 pieces per hr.

OPERATION 2. BENDING FLANKS TO FIT BARREL AND BENDING PRONGS

Transformation—Fig. 1860. Machine Used—Niagara No. 36, 1½-in. stroke. Number of Operators per Machine—One. Punches and Punch Holders—Round shank A, Fig. 1861. Dies and Die Holders—Dies screwed to plate which is bolted to bed B, Fig. 1861. Stripping Mechanism—None. Production—650 pieces per hr.

OPERATION 3. BENDING FLANKS TOGETHER TO FIT BARREL

Transformation—Fig. 1862. Machine Used—Niagara No. 36, 1½-in. stroke. Number of Operators per Machine—One. Punches and Punch Holders—Round shank. Dies and Die Holders—In shoe by setscrews; die shown in Fig. 1863. Stripping Mechanism—None. Gages—None. Production—650 pieces per hr. Note—A mandrel is placed at center point which gives top circle and shapes ends. Pieces on side of die close in, bending prongs together.

OPERATION 4. BENDING DOWN FRONT PRONGS

Transformation—Fig. 1864. Machine Used—Old draw press, maker not known. Number of Operators per Machine—One. Punches and Punch Holders—Round shank, Fig. 1865. Dies and Die Holders—Screwed to plate which is bolted to bed of press; a holder is placed inside of cover to keep it from closing together; punch forces end over and down. Stripping Mechanism—None. Gages—None. Production—800 pieces per hr.

OPERATION 5. BENDING DOWN REAR PRONGS

Transformation—Fig. 1866. Machine Used—Old draw press, maker not known. Number of Operators per Machine—One. Punches and Punch Holders—Round shank. Dies and Die Holders—Screwed to plate which is bolted to bed of press; holder in this operation is similar to but of a different size from that used in operation 4. Gages—None. Production—800 pieces per hr.

OPERATION 7-A. CORRECTING

Number of Operators—One. Description of Operation—Testing springiness. Apparatus and Equipment Used—Piece of stock size of barrel and pair of hands. Gages—Fig. 1867. Production—1200 pieces per hr.

OPERATION 9. CASEHARDEN

Number of Operators—One. Description of Operation—Pack in bone and leather and caseharden in usual way. Apparatus and Equipment Used—Usual equipment.

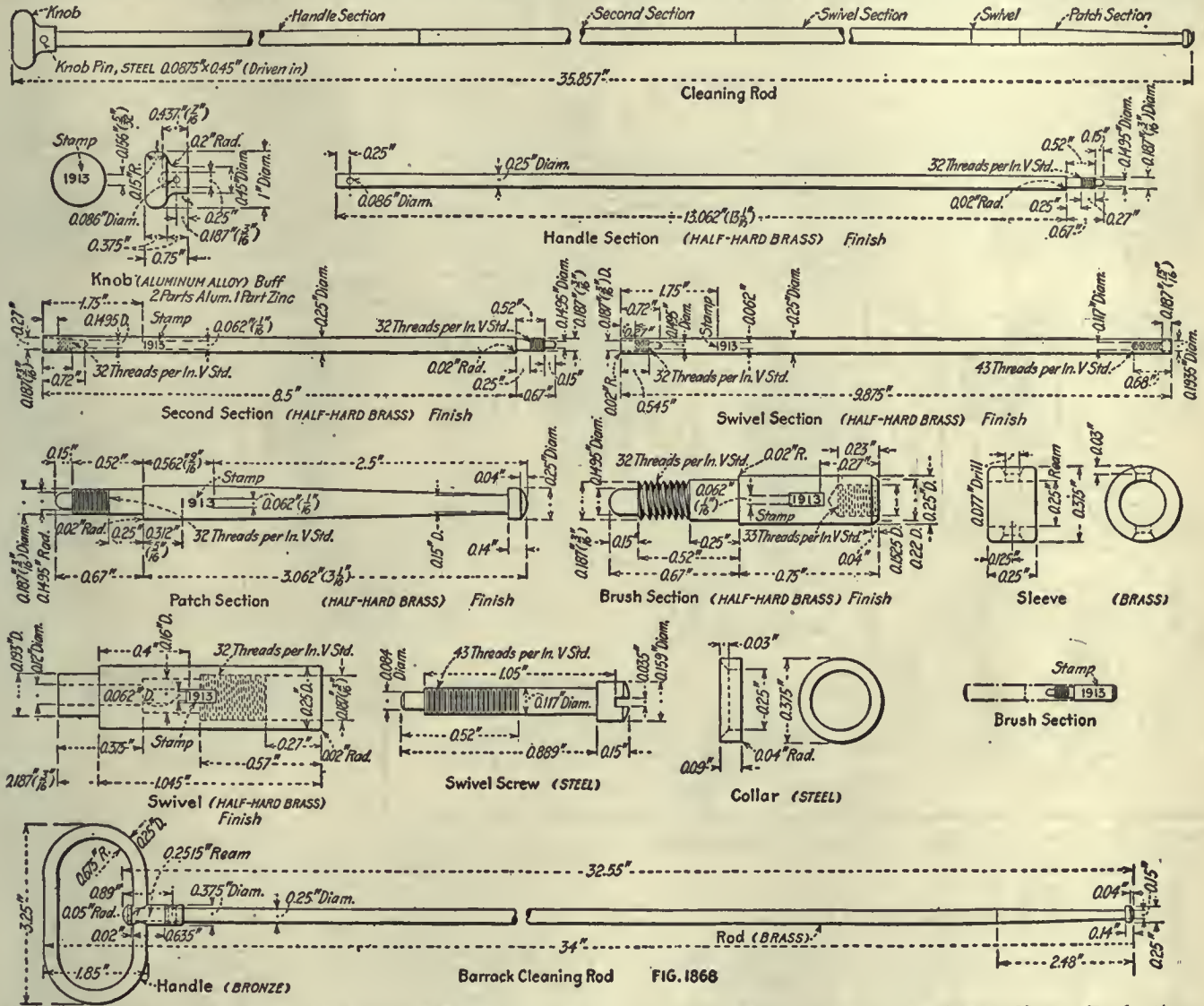

Operations on Barrel-Cleaning Rods

There are two types of cleaning rods, the solid rod for use in barracks, the jointed rod and the thong cleaner. These are all shown in detail in Fig. 1868, the greater part of the work being done on a screw machine. The operations are shown in connection with the transformation drawings and so require no explanation whatever.

OPERATIONS ON THE CLEANING ROD, KNOB

Operation
1 Forming, drilling, reaming and cutting off
2 Stamping 1903

OPERATION 1. FORMING, DRILLING, REAMING AND CUTTING OFF

Transformation—Fig. 1869. Machine Used—Hartford No. 2 automatic. Number of Machines per Operator—Four. Work-Holding Devices—Draw-in chuck. Tool-Holding Devices—Turret and crossforming tool drill. Cutting Tools—Drill, reamer, forming tool and cutoff. Number of Cuts—Three. Cut Data—900 r.p.m.; $\frac{1}{16}$-in. feed. Coolant—Cutting oil, $\frac{1}{4}$-in. stream. Average Life of Tool Between Grindings—1000 pieces. Production—315 pieces per hr. Note—This is made from an aluminum alloy; bids for die casting have been asked for, which will eliminate machinery.

OPERATION 2. STAMPING 1903

Description of Operation—Stamping 1903 on end of knob. Apparatus and Equipment Used—Hammer and stamp. Production—500 pieces per hr. Note—This would also be eliminated by the use of die castings.

OPERATIONS ON THE BARRACK CLEANING-ROD HANDLE

Operation
1 Drill, ream and face both sides

OPERATION 1. BARRACK CLEANING ROD, HANDLE

Transformation—Fig. 1871. Machine Used—Pratt & Whitney No. 1 hand screw machine. Number of Operators per Machine—One. Work-Holding Devices—Work held in fixture, screwed to spindle in head, clamped by chuck jaws, Fig. 1872; counterweight is shown. Tool-Holding Devices—Turret of machine. Cutting Tools—Spot drill, drill, reamer, facing and back-facing tools; back-facing tool is held in same way as cutter for facing cutoff slot in receiver, Fig. 410. Number of Cuts—Three. Cut Data—900 r.p.m.; hand feed. Coolant—None. Average Life of Tool Between Grindings—800 pieces. Gages—Plug and length. Production—150 pieces per hr.

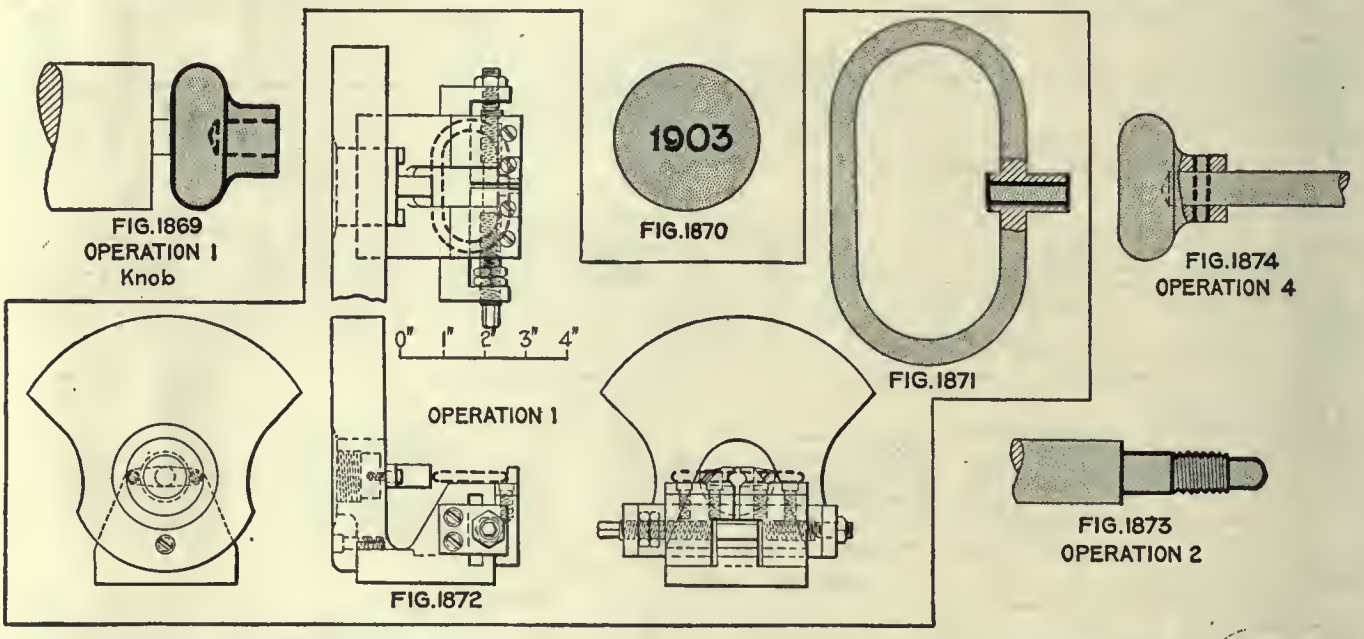

OPERATIONS ON THE CLEANING ROD, HANDLE SECTION

Operation
1 Cutting to length
2 Threading one end
3 Assembling knob
4 Drilling and reaming pin hole
5 Assembling with pin
6 Polishing
7 Assembling rod and stamping all parts except knob

OPERATION 1. CUTTING TO LENGTH

Machine Used—Pratt & Whitney hand screw machine. Number of Operators per Machine—One. Work-Holding Devices—Draw-in chuck. Tool-Holding Devices—Crossfeed. Cutting Tools—Cutting-off tool. Number of Cuts—One. Cut Data—900 r.p.m.; hand feed. Average Life of Tool Between Grindings—500 pieces. Gages—Length. Production—350 pieces per hr.

OPERATION 2. THREADING ONE END

Transformation—Fig. 1873. Machine Used—Pratt & Whitney hand screw machine. Number of Operators per Machine—One. Work-Holding Devices—Draw-in chuck. Tool-Holding Devices—Held in turret of machine. Cutting Tools—Hollow mill, threading die, forming tool (rounding end). Number of Cuts—Three. Cut Data—900 r.p.m.; hand feed. Average Life of Tool Between Grindings—500 pieces. Gages—Ring, thread and length. Production—70 pieces per hr.

OPERATION 3. ASSEMBLING KNOB FOR DRILLING

Number of Operators—One. Description of Operation—Assembling knob to rod. Apparatus and Equipment Used—Hammer and bench block. Production—125 pieces per hr.

OPERATION 4. DRILLING AND REAMING PIN HOLE

Transformation—Fig. 1874. Machine Used—Any drilling machine. Number of Operators per Machine—One. Work-Holding Devices—Held in V-block. Tool-Holding Devices—Drill chuck. Cutting Tools—Twist drill and reamer. Number of Cuts—Two. Cut Data—900 r.p.m.; hand feed. Average Life of Tool Between Grindings—500 pieces. Gages—Plug. Production—90 pieces per hr. Note—Held in hand to ream.

OPERATION 5. ASSEMBLING WITH PIN

Description of Operation—Assembling knob with pin. Apparatus and Equipment Used—Bench and hand hammer. Gages—None. Production—125 pieces per hr.

OPERATION 6. POLISHING

Number of Operators—One. Description of Operation—Polishing ends of rivet in knob. Apparatus and Equipment Used—Buffing and polishing wheels. Production—600 pieces per hr.

OPERATION 7. ASSEMBLING ROD AND STAMPING ALL PARTS EXCEPT KNOB

Number of Operators—One. Description of Operation—Assembling and stamping 1903. Apparatus and Equipment Used—Hand stamp and hammer. Production—55 pieces per hr.

OPERATIONS ON THE CLEANING ROD, SECOND SECTION

Operation
1 Cutting to length
2 Threading male end
3 Drilling, tapping and counterboring

OPERATION 1. CUTTING TO LENGTH

Transformation—Fig. 1875. Machine Used—Pratt & Whitney hand screw machine. Number of Operators per Machine—One. Work-Holding Devices—Draw-in. chuck, hollow-spindle lathe. Tool-Holding Devices—Crossfeed. Cutting Tools—Cutting-off tool, hand forged. Number of Cuts—One. Cut Data—900 r.p.m.; hand feed. Average Life of Tool Between Grindings—500 pieces. Gages—Length. Production—350 pieces per hr.

OPERATION 2. THREADING MALE END

Transformation—Fig. 1875. Machine Used—Pratt & Whitney hand screw machine. Number of Operators per Machine—One. Work-Holding Devices—Draw-in chuck. Tool-Holding Devices—Turret of machine. Cutting Tools—Threading die. Number of Cuts—Three. Cut Data—900 r.p.m.; hand feed. Average Life of Tool Between Grindings—500 pieces. Gages—Thread and length. Production—75 pieces per hr.

OPERATION 3. DRILLING, TAPPING AND COUNTERBORING

Transformation—Fig. 1875. Machine Used—Pratt & Whitney hand screw machine. Number of Operators per Machine—One. Work-Holding Devices—Draw-in chuck. Tool-Holding Devices—Turret of machine. Cutting Tools—Drill, tap and counterbore. Number of Cuts—Three. Cut Data—900 r.p.m.; hand feed. Average Life of Tool Between Grindings—500 pieces. Gages—Plug, thread and depth. Production—50 pieces per hr.

OPERATIONS ON THE SWIVEL SECTION, CLEANING ROD, 1903

Operation
1 Drilling, counterboring, tapping first end and cutting off
2 Drilling, counterboring, tapping second end

OPERATION 1. TAPPING FIRST END

Transformation—Fig. 1876. Machine Used—Pratt & Whitney hand screw machine. Number of Operators per Machine—One. Work-Holding Devices—Draw-in chuck. Tool-Holding Devices—Turret. Cutting Tools—Drill, counterbore and tap. Number of Cuts—Three. Cut Data—950 r.p.m. Gages—Plug, thread and depth. Production—150 per hr.

OPERATION 2. TAPPING SECOND END

Transformation—Fig. 1876. Machine Used—Pratt & Whitney hand screw machine. Number of Operators per Machine—One. Work-Holding Devices—Draw-in chuck. Tool-Holding Devices—Turret of machine. Cutting Tools—Similar to operation 1. Number of Cuts—Three. Cut Data—950 r.p.m. Gages—Same as operation 1. Production 150 per hr.

OPERATIONS ON THE SWIVEL, CLEANING ROD, 1903

Operation
1 Drilling, reaming, threading one end and cutting to working length
3 Polishing joint corners
4 Stamping 1903

OPERATION 1. DRILLING, REAMING, THREADING ONE END AND CUTTING TO WORKING LENGTH

Transformation—Fig. 1877. Machine Used—Pratt & Whitney No. 1 hand screw machine. Number of Operators per Machine — One. Work-Holding Devices — Draw-in chuck. Tool-Holding Devices—Turret of machine. Cutting Tools—Drill, reamer, threader and cutoff. Number of Cuts—Four. Cut Data—900 r.p.m.; hand feed. Average Life of Tool Between Grindings—500 pieces. Gages—Diameter, thread, length and depth of recess. Production—150 pieces per hr.

OPERATION 3. POLISHING JOINT CORNERS

Number of Operators—One. Description of Operation—Rounding corners. Apparatus and Equipment Used—Polishing stand and wheel. Production—650 pieces per hr.

OPERATION 4. STAMPING 1903

Number of Operators—One. Description of Operation—Stamping 1903. Apparatus and Equipment Used—Hammer and stamp. Production—700 pieces per hr.

OPERATIONS ON THE CLEANING ROD, SWIVEL SCREW

Operation
1 Trimming, threading and cutting off
2 Slotting
3 Polishing

OPERATION 1. TRIMMING, THREADING AND CUTTING OFF

Transformation—Fig. 1878. Machine Used—Hartford No. 2 automatic. Number of Machines per Operator—Four. Work-Holding Devices—Work held in draw-in chuck. Tool-Holding Devices—Turret of machine. Cutting Tools—Trimming, box tool, threading die and cutoff. Number of Cuts—Three. Cut Data—1200 r.p.m.; $\frac{1}{16}$-in. feed. Coolant—Cutting oil, ¼-in. stream. Average Life of Tool Between Grindings—400 pieces. Gages—Ring, thread and length. Production—50 pieces per hr.

OPERATION 2. SLOTTING

Number of Operators—One. Description of Operation—Slotting head of screw. Apparatus and Equipment Used—Hand slotting or Manville automatic slotter and saw. Production—700 pieces per hr.

OPERATION 3. POLISHING

Number of Operators—One. Description of Operation—Polishing and burring. Apparatus and Equipment Used—Wheel and polishing stand. Production—1000 pieces per hr.

OPERATIONS ON THE CLEANING ROD, PATCH SECTION

Operation
1 Cutting to length
2 Clamp-milling bottom end
3 Trimming, threading and rounding ends

OPERATION 1. CUTTING TO LENGTH

Transformation—Fig. 1879-A. Machine Used—Pratt & Whitney hand screw machine. Number of Operators per Machine—One. Work-Holding Devices—Draw-in chuck. Tool-Holding Devices—Turret and cross-slide. Cutting Tools—Cutting-off tool. Number of Cuts—One. Cut Data—900 r.p.m.; hand feed. Average Life of Tool Between Grindings—500 pieces. Gages—Length. Production—350 pieces per hr.

OPERATION 2. CLAMP-MILLING BOTTOM END

Transformation—Fig. 1879-B. Machine Used—Machine ouilt at the Hill shops. Number of Operators per Machine—One. Work-Holding Devices—Held in draw-in chuck. Tool-Holding Devices—Crossfeed. Cutting Tools—Clamp-milling cutters, Fig. 1880. Number of Cuts—One. Cut Data—250 r.p.m.; hand feed. Coolant—None. Average Life of Tool Between Grindings—1500 pieces. Gages—Form. Production—150 pieces per hr.

OPERATION 3. TRIMMING, THREADING AND ROUNDING ENDS

Transformation—Fig. 1879-C. Machine Used—Pratt & Whitney hand screw machine. Number of Operators per Machine—One. Work-Holding Devices—Draw-in chuck. Tool-Holding Devices—Turret of machine. Cutting Tools—Hollow mill, threading die and forming tool. Number of Cuts—Three. Cut Data—900 r.p.m.; hand feed. Average Life of Tool Between Grindings—500 pieces. Gages—Length, diameter and thread. Production—70 pieces per hr.

OPERATIONS ON THE CLEANING ROD, BRUSH SECTION

Operation
1 Forming, threading and cutting to length
2 Drilling and tapping
4 Stamping 1903

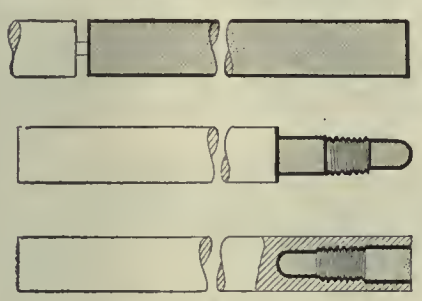

FIG. 1875
OPERATION 1, Second Piece

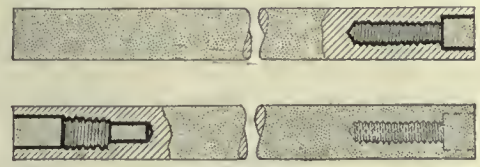

FIG. 1876
OPERATION 1, Swivel Section

FIG. 1877
OPERATION 1, Swivel

FIG. 1878

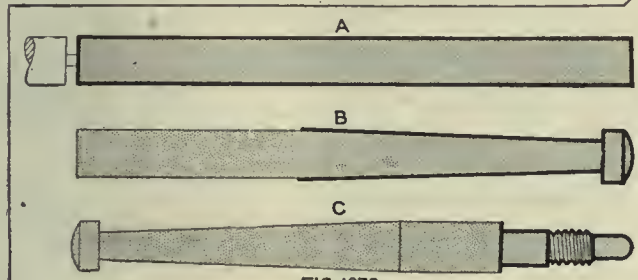

FIG. 1879
OPERATION 2

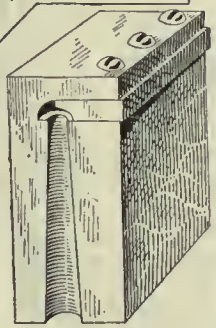

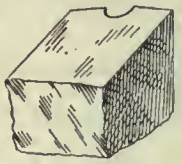

FIG. 1880

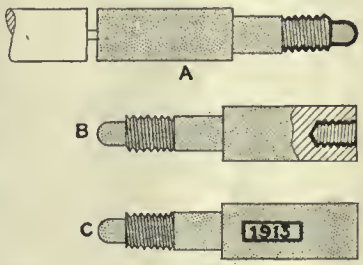

FIG. 1881
OPERATION 1, Brush Section

OPERATION 1. FORMING, THREADING AND CUTTING TO LENGTH

Transformation—Fig. 1881-A. Machine Used—Acme No. 2 automatic screw machine. Number of Machines per Operator—Four. Work-Holding Devices—Draw-in chuck. Tool-Holding Devices—Turret of machine. Cutting Tools—Hollow mill, die, end-forming tool, cutoff. Number of Cuts—Three. Cut Data—1200 r.p.m.; $\frac{1}{16}$-in. feed. Average Life of Tool Between Grindings—1000 pieces. Gages—Diameter and length of thread. Production—160 pieces per hr.

OPERATION 2. DRILLING AND TAPPING

Transformation—Fig. 1881-B. Machine Used—Pratt & Whitney hand screw machine. Number of Operators per Machine—One. Work-Holding Devices—Draw-in chuck. Tool-Holding Devices—Turret of machine. Cutting Tools—Drill and tap. Number of Cuts—Two. Cut Data—900 r.p.m.; hand feed. Average Life of Tool Between Grindings—1000 pieces. Gages—Diameter and depth. Production—75 pieces per hr.

OPERATION 4. STAMPING 1903

Transformation—Fig. 1881-C. Number of Operators—One. Description of Operation—Stamping 1903 on rod. Apparatus and Equipment Used—Hammer and stamp. Production—650 pieces per hr.

Oiler and Thong Case, Spare-Parts Container, Screwdriver

With the completion of the parts in this section, the machine work on the rifle proper has been finished and assembly to the stock is next in order. This naturally brings us to the making of the stock itself, which follows this section. This will also include the hand guard, which covers the top of the barrel and is really part of the stock itself.

Oiler and Thong Case

This fits into an opening in the stock of the rifle, this opening being covered by the butt-plate cap. These parts are furnished for every alternate rifle only, the spare-parts container being supplied with the remaining rifles.

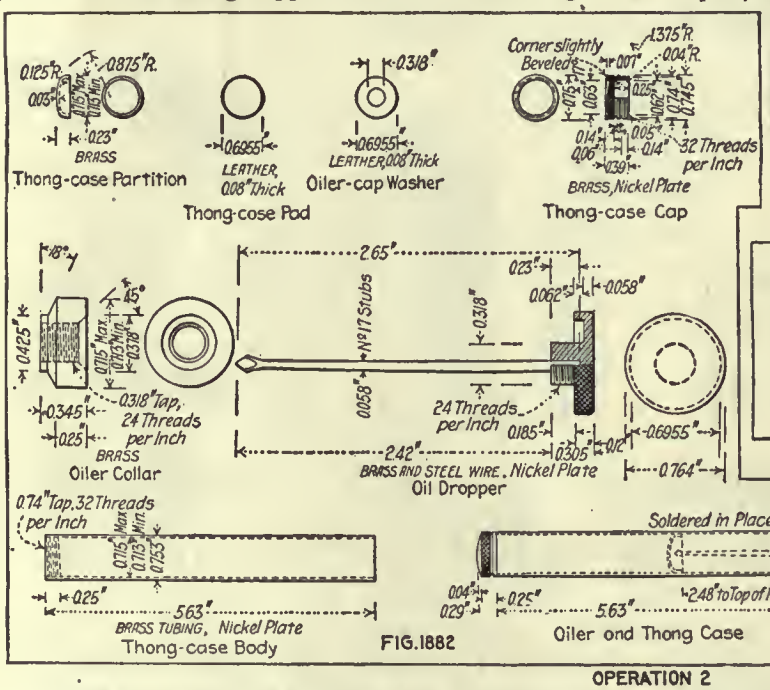

FIG. 1882

FIG. 1883

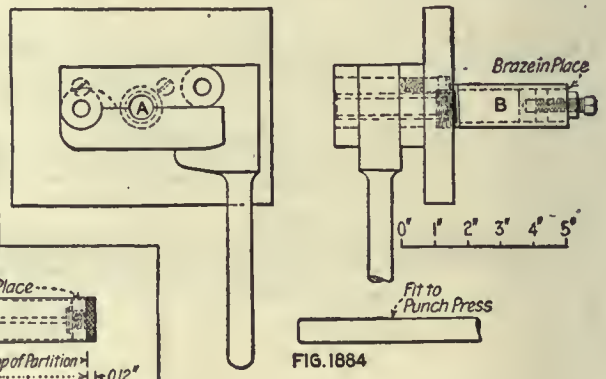

FIG. 1884

OPERATIONS ON THE OILER AND THONG CASE

Operation

1 Cutting off
2 Assembling
2-A Making partition in punch press
3 Soldering collar
4 Soldering partition
5 Square end, thread and countersink
6 Thread thong-case end
7 Assembling

OPERATION 1. CUTTING OFF

Machine Used—Pratt & Whitney hand screw machine. Number of Operators per Machine—One. Work-Holding Devices—Draw-in chuck. Tool-Holding Devices—Crossfeed. Cutting Tools—Cutting-off tool. Number of Cuts—One. Cut Data—750 r.p.m.; hand feed. Average Life of Tool Between Grindings—1000 pieces. Gages—Length, 3⅝ in. Production—350 pieces per hr.

OPERATION 2. ASSEMBLING PARTITION

Transformation—Fig. 1883. Number of Operators—One. Description of Operation—Assembling partition and case. Apparatus and Equipment Used—Vise in punch press, Fig. 1884; is also done with hammer and block. Gages—Position of partition. Production—350 pieces per hr.

OPERATION 2-A. PUNCHING AND FORMING PARTITION DISKS

Maehine Used—Niagara No. 31 press. Number of Operators per Machine—One. Punches and Punch Holders—Round shank. Dies and Die Holders—Held in shoe by setscrew, Fig. 1885. Stripping Mechanism—Forced out of die by spring knock-out. Production—650 pieces per hr. Note—Disk punched from strip and cupped at one operation.

OPERATIONS 3 AND 4. SOLDERING COLLAR AND PARTITION

Transformation—See complete case, Fig. 1882. Number of Operators—One. Description of Operation—Soldering end collar and partition; strip solder in form of a ring; heat applied by torch at side; revolved slowly by belt beneath. Apparatus and Equipment Used—Soldering machine and torch, Fig. 1886. Gages—None. Production—200 pieces per hr.

OPERATION 4½. OILER COLLAR

Transformation—See Fig. 1882. Machine Used—Cleveland automatic. Number of Operators per Machine—One. Work-Holding Devices—Draw-in chuck. Cutting Tools—Drill, counterbore and tap; cutoff. Number of Cuts—Four. Cut Data—600 r.p.m. Gages—Diameter, length and plug thread. Production—140 pieces per hr.

OPERATION 5. SQUARE END, THREAD AND COUNTERSINK

Transformation—Fig. 1887. Machine Used—Pratt & Whitney hand screw machine. Number of Operators per Machine—One. Work-Holding Devices—Draw-in chuck. Tool-Holding Devices—Turret of machine. Cutting Tools—Facing cutter, tap and countersink. Number of Cuts—Three. Cut Data—900 r.p.m.; hand feed. Average Life of Tool Between Grindings—1000 pieces. Gages—Length and thread. Production—150 pieces per hr.

OPERATION 6. THREAD THONG-CASE END

Transformation—Fig. 1888. Machine Used—Pratt & Whitney hand screw machine. Number of Operators per Machine—One. Work-Holding Devices—Draw-in chuck. Tool-Holding Devices—Turret of machine. Cutting Tools—Tap. Number of Cuts—One. Cut Data—250 r.p.m. Average Life of Tool Between Grindings—5000 pieces. Gages—Threaded plug. Production—350 pieces per hr.

OPERATIONS ON THE THONG-CASE CAP

Operation

1 Automatic
2 Forming end
3 Swaging and assembling leather

OPERATION 1. AUTOMATIC

Transformation—Fig. 1889-A. Machine Used—Pratt & Whitney or Acme automatic. Number of Machines per Operator—Four. Work-Holding Devices—Draw-in chuck. Tool-Holding Devices—Turret of machine. Cutting Tools—Spot, form, drill, knurling tool, thread and cutoff. Number of Cuts—Six. Cut Data—1200 r.p.m.; ⅛-in. feed. Average Life of Tool Between Grindings—900 pieces. Gages—Diameter, depth and thread. Production—35 pieces per hr.

OPERATION 2. FORMING END

Transformation—Fig. 1889-B. Machine Used—Pratt & Whitney No. 1 hand screw machine. Number of Operators per Machine—One. Work-Holding Devices—Draw-in chuck. Tool-Holding Devices—Turret of machine. Cutting Tools—Forming tool. Number of Cuts—One. Cut Data—750 r.p.m.; hand feed. Average Life of Tool Between Grindings—500 pieces per hr. Gages—Diameter and form. Production—150 pieces per hr.

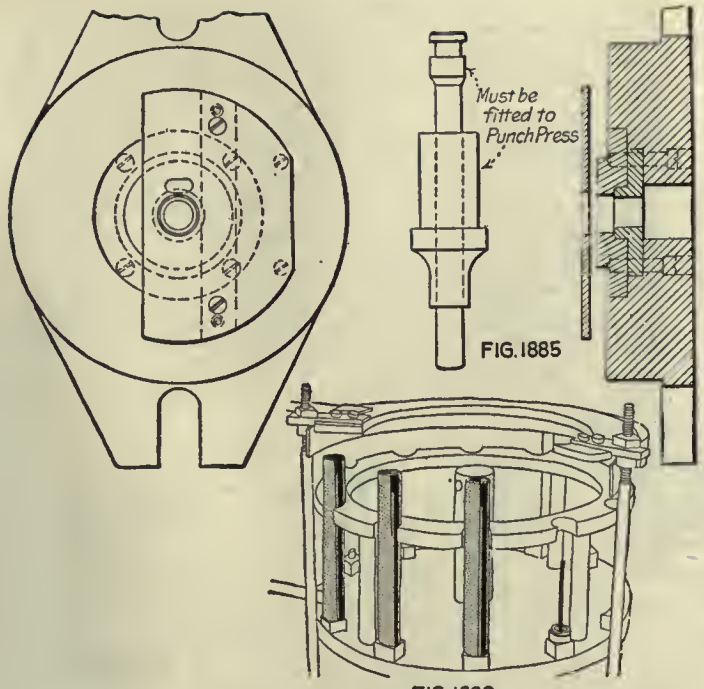

FIG. 1885

FIG. 1886

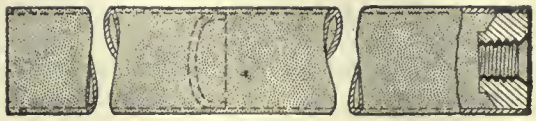

FIG. 1887
OPERATION 5

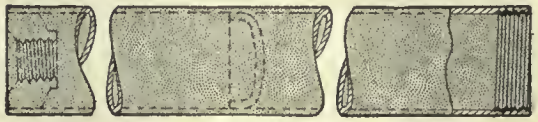

FIG. 1888
OPERATION 6

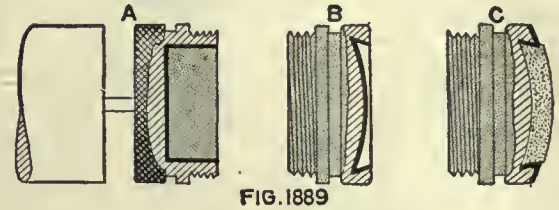

FIG. 1889

OPERATION 3. SWAGING AND ASSEMBLING LEATHER

Transformation—Fig. 1889-C. Machine Used—Old 10-in. Prentice lathe. Number of Operators per Machine—One. Work-Holding Devices—Draw-in chuck. Tool-Holding Devices—Crossfeed. Cutting Tools—Swaging or spinning tool. Number of Cuts—One. Cut Data—250 r.p.m.; hand feed. Production—350 pieces per hr.

OPERATION 1. AUTOMATIC

Transformation—Fig. 1890. Machine Used—Any automatic screw machine. Number of Machines per Operator—Four. Work-Holding Devices—Draw-in chuck. Tool-Holding Devices—Turret of machine. Cutting Tools—Spot, former, drill and cutoff. Number of Cuts—Four. Cut Data—1200 r.p.m.; $\frac{1}{16}$-in. feed. Average Life of Tool Between Grindings—1000 pieces. Gages—Thread, diameter and thickness of head. Production—125 pieces per hr.

OPERATION 7. ASSEMBLING

Transformation—Fig. 1892. Number of Operators—One. Description of Operation—Assembling cap to case and wire, with end flattened, to cap. Apparatus and Equipment Used—Special vise for holding wire while cap is forced on. Gages—Assembled length, Fig. 1893. Production—350 pieces per hr.

OPERATIONS ON THE THONG TIP

Operation

1 Automatic
2 Milling
3 Punching thong hole and rag slot
4 Straightening
5 Countersinking
6 Polishing
8 Dipping

OPERATION 1. AUTOMATIC

Transformation—Fig. 1895. Machine Used—Any small automatic screw machine. Number of Machines per Operator—Four. Work-Holding Devices—Held in draw-in chuck. Tool-Holding Devices—Tool in turret of machine. Cutting Tools—Spot drill, tap and cutoff. Number of Cuts—Four. Cut Data—1500 r.p.m.; $\frac{1}{16}$-in. feed. Coolant—None. Average Life of Tool Between Grindings—1000 pieces. Gages—Diameter, length, depth of hole and counterbore; threaded plug. Production—215 pieces per hr.

OPERATION 2. MILLING

Transformation—Fig. 1896. Machine Used—Pratt & Whitney No. 2 Lincoln miller. Number of Machines per Operator—Two. Work-Holding Devices—Vise jaws. Tool-Holding Devices—Standard arbor. Cutting Tools—Milling cutters. Number of Cuts—One. Cut Data—125 r.p.m.; $\frac{5}{8}$-in. feed. Average Life of Tool Between Grindings—5000 pieces. Gages—Thickness and contour. Production—125 pieces per hr.

OPERATION 3. PUNCHING THONG HOLE AND RAG SLOT

Transformation—Fig. 1897. Machine Used—Snow-Brooks No. 1 punch press. Number of Operators per Machine—One. Punches and Punch Holders—Square shank. Dies and Die Holders—Die fixture bolted to bed of press. Stripping Mechanism—Stripper held by jaws. Average Life of Punches and Dies—1500 pieces. Gages—Fig. 1898, location and size of holes. Production—400 pieces per hr.

OPERATION 4. STRAIGHTENING

Number of Operators—One. Description of Operation—Straightening after punching. Apparatus and Equipment Used—Lead hammer and block. Gages—Contour. Production—350 pieces per hr.

OPERATION 5. COUNTERSINKING

Number of Operators—One. Description of Operation—Countersinking thong hole and patch slot. Apparatus and Equipment Used—Bench lathe and countersink. Production—350 pieces per hr.

OPERATION 6. POLISHING

Number of Operators—One. Description of Operation—Polishing or burring. Apparatus and Equipment Used—Polishing jack and wheel. Production—600 pieces per hr.

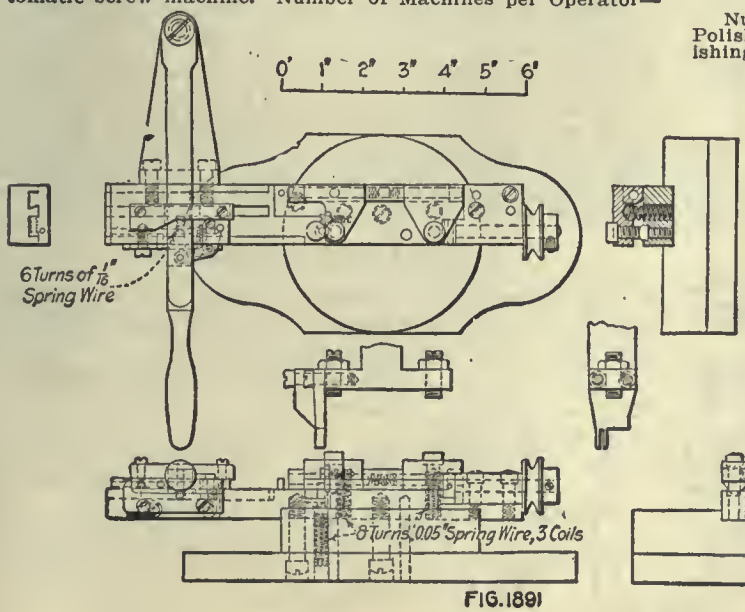

FIG. 1891

FIG. 1890

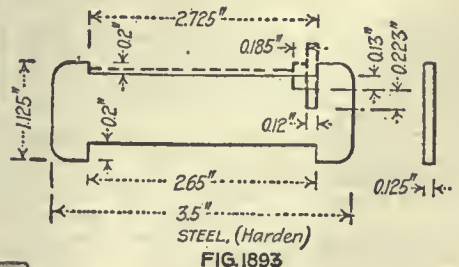

FIG. 1893

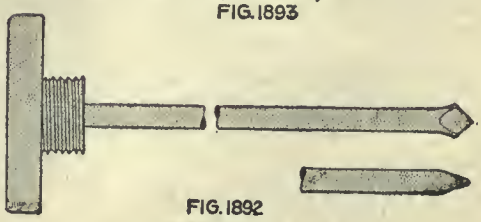

FIG. 1892
OPERATION 7

OPERATION 8. DIPPING

Number of Operators—One. Description of Operation—Washed in potash and then dipped in a solution consisting of 1 part sulphuric acid and 1 part nitric acid; just dipped and taken right out. Apparatus and Equipment Used—Wooden tanks, wire baskets.

OPERATIONS ON THE THONG WEIGHT

1 Automatic
2 Straddle-milling
3 Punching for thong
4 Countersinking
5 Polishing
7 Dipping

OPERATION 1. AUTOMATIC

Transformation—Fig. 1899. Machine Used—Cleveland, Hartford, National-Acme or Pratt & Whitney. Number of Machines per Operator—Four. Work-Holding Devices—Draw-in chuck. Tool-Holding Devices—Turret of machine. Cutting Tools—Hollow mill, threading die and cutoff. Number of Cuts—Three. Cut Data—1200 r.p.m.; $\frac{1}{16}$-in. feed. Average Life of Tool Between Grindings—1000 pieces. Gages—Fig. 1900, length, diameter and rounded end. Production—200 pieces per hr.

OPERATION 1. AUTOMATIC

Transformation—Fig. 1904. Machine Used—Acme No. 1 automatic screw machine. Number of Machines per Operator—Four. Work-Holding Devices—Draw-in chuck. Tool-Holding Devices—Turret of machine. Cutting Tools—Hollow mill, threader and cutoff. Number of Cuts—Three. Cut Data—1200 r.p.m.; $\frac{1}{16}$-in. feed. Average Life of Tool Between Grindings—1000 pieces. Gages—Diameter length, form of end and thread, similar to Fig. 1900. Production—250 pieces per hr.

OPERATION 2. PROFILING GROOVE FOR WIRE

Transformation—Fig. 1905. Machine Used—Pratt & Whitney No. 1 profiler. Number of Operators per Machine—One. Work-Holding Devices—Vise jaws. Tool-Holding Devices—Taper shank. Cutting Tools—Profiler. Number of Cuts—One. Cut Data—1200 r.p.m.; hand feed. Average Life of Tool Between Grindings—500 pieces. Gages—Snap gage for size and depth of grooves. Production—150 pieces per hr.

OPERATION 3. DRILLING HOLE FOR WIRE

Transformation—Fig. 1906. Machine Used—Any drilling machine. Number of Operators per Machine—One. Work-Holding Devices—Drill jig. Tool-Holding Devices—Drill chuck. Cutting Tools—Twist drill. Number of Cuts—One. Cut Data—900 r.p.m.; hand feed. Average Life of Tool Between Grindings—350 pieces. Gages—Diameter of hole. Production—150 pieces per hr.

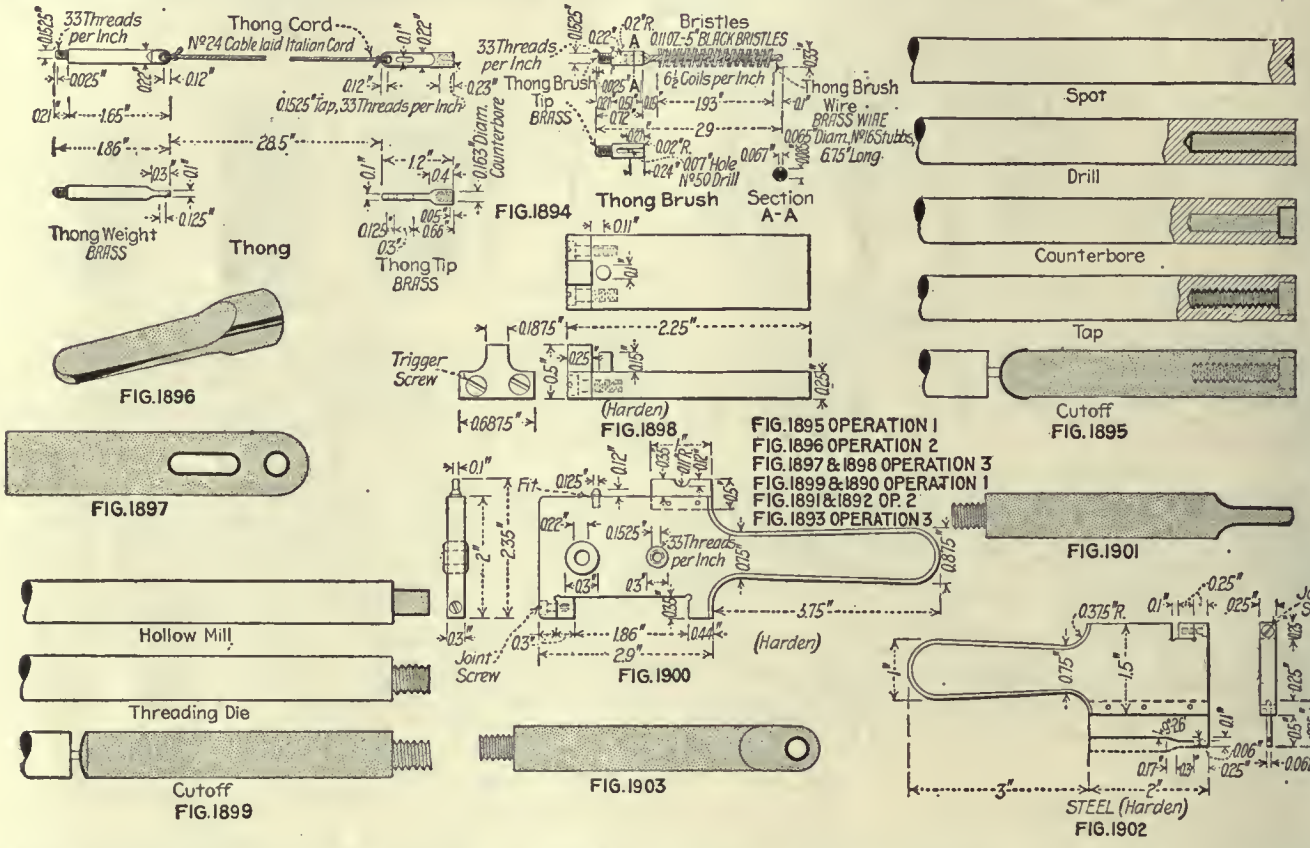

OPERATION 2. STRADDLE-MILLING

Transformation—Fig. 1901. Machine Used—Whitney hand miller. Number of Operators per Machine—One. Work-Holding Devices—Vise jaws. Tool-Holding Devices—Standard arbor. Cutting Tools—Two facing cutters. Number of Cuts—One. Cut Data—900 r.p.m.; hand feed. Average Life of Tool Between Grindings—5000 pieces. Gages—Fig. 1902, thickness and contour. Production—350 pieces per hr.

OPERATION 3. PUNCHING FOR THONG

Transformation—Fig. 1903. Machine Used—Snow-Brooks No. 1 punch press. Number of Operators per Machine—One. Punches and Punch Holders—Square shank. Dies and Die Holders—Held on plate screwed to bed of press. Stripping Mechanism—Steel strippers screwed to face of die. Average Life of Punches and Dies—1000 pieces. Production—1000 pieces per hr.

OPERATION 4. COUNTERSINKING

Number of Operators—One. Description of Operation—Countersinking thong hole. Apparatus and Equipment Used—Bench lathe and countersink. Production—350 pieces per hr.

OPERATION 5. POLISHING

Number of Operators—One. Description of Operation—Polishing, burring. Apparatus and Equipment Used—Polishing stand and wheel. Production—500 pieces per hr.

OPERATION 7. DIPPING

Number of Operators—One. Description of Operation—Washed in potash and then dipped in a solution consisting of 1 part sulphuric acid and 1 part nitric acid to clean thoroughly. Apparatus and Equipment Used—Wooden tanks, wire baskets.

OPERATION ON THE THONG BRUSH, TIP

Operation
1 Automatic
2 Profiling groove for wire
3 Drilling hole for wire
5 Coiling and trimming bristles

OPERATION 5. COILING AND TRIMMING BRISTLES

Number of Operators—One. Description of Operation—Special coiling and trimming machine built at the Hill shop, Fig. 1907; the bristles are held at A by clamp B; the brush tip is held in C and the wires in D; the wire is looped through the hole in the brush tips, and the ends are caught in the chuck D; then the bristles are pushed forward between the wires, against the stop J in Fig. 1908, and cut off by the knife H; the wires are now twisted to hold the bristles in place, as in Fig. 1909, and then the stop J drops out of the way and the slide moves back so that the cutter E can trim the ends of the bristles against the knife G, Fig. 1910. Production—Average about 40 per hr.

Spare-Parts Container

The spare-parts containers are made from waste wood that is unsuitable for stocks. The details are shown in Fig. 1911. The other operations follow.

OPERATIONS ON THE SPARE-PARTS CONTAINER

Operation
A Planing
B Cutting off
C Jointing
D Resawing to thickness
1 Resawing to width
2 Turning
3 Cutting off to length
4 Swaging to size
5 Drilling
6 Profiling
7 Oiling with linseed
8 Packing spares in container

OPERATION 2. TURNING

Transformation—Fig. 1912. Machine Used—Wood-turning machine. Number of Operators per Machine—One. Work-Holding Devices—Held between rolls. Cutting Tools—Fly cutters. Cut Data—3500 r.p.m.; hand feed. Average Life of Tool Between Grindings—1500 pieces per hr. Production—400 pieces per hr.

OPERATION 3. CUTTING OFF TO LENGTH

Number of Operators—One. Description of Operation—Sawing to length, 5¾ in. Apparatus and Equipment Used—Table saw; speed, 3500 r.p.m. Gages—Length. Production—400 pieces per hr.

OPERATION 4. SWAGING TO SIZE

Number of Operators—One. Description of Operation—Swaging to size. The containers are swaged to size by being forced through a round steel die about 4 in. long and of the proper diameter for the finished piece; the front end of the hole is tapered about ⅜ in. to the foot and is bolted to the bed of a old planer; the pusher, which is a stud that is fastened to th crossrail by a special forging, forces the container through the die as the table moves under the rail; these pieces are handled as fast as the planer can travel, as the operator only has to insert the end in the tapered portion of the die; this operation reduces the diameter approximately ⅛ in. Apparatus and Equipment Used—As described above. Production—500 pieces per hr.

OPERATION 5. DRILLING

Transformation—Fig. 1913. Machine Used—Horizontal three-spindle drilling machine. Number of Operators per Machine—One. Work-Holding Devices—Vise jaws on machine, Fig. 1914. Tool-Holding Devices—Taper shank. Cutting Tools—Twist drills. Number of Cuts—Three. Cut Data—3500 r.p.m.; hand feed. Average Life of Tool Between Grindings—500 pieces. Production—35 pieces per hr.

OPERATION 6. PROFILING

Transformation—Fig. 1915. Machine Used—Wood profiler. Number of Operators per Machine—One. Work-Holding Devices—Work held in rotating fixture, Fig. 1916. Tool-Holding Devices—Taper shank. Cutting Tools—Two-point fly cutters. Number of Cuts—Four. Cut Data—8300 r.p.m.; hand feed. Average Life of Tool Between Grindings—500 pieces. Gages—Use an extractor. Production—40 pieces per hr.

OPERATION 7. OILING WITH LINSEED OIL

Number of Operators—One. Description of Operation—Dipped in linseed oil and left over night to dry. Apparatus and Equipment Used—Trays filled with boiled linseed oil. Production—1000 pieces per hr.

OPERATION 8. PACKING SPARES IN CONTAINER

Number of Operators—One. Description of Operation—Packing spare parts (cooking piece, striker and extractor) in container. Apparatus and Equipment Used—Hands. Production—100 per hr.

The Screwdriver

The screwdriver consists of two blades, hinged together so that one forms the handle for the other. One blade is larger than the other, and they are designated as the small and the large blade. The assembling of the complete screwdriver is shown in Fig. 1924. The blades are machined all over instead of being swaged to size and ground where necessary.

OPERATIONS ON THE SCREWDRIVER BLADE, SMALL

Operation	
v	Cutting off
A	Forging from bar
B	Annealing
B-1	Pickling
C	Trimming
C-1	Cold dropping
D	Buffing

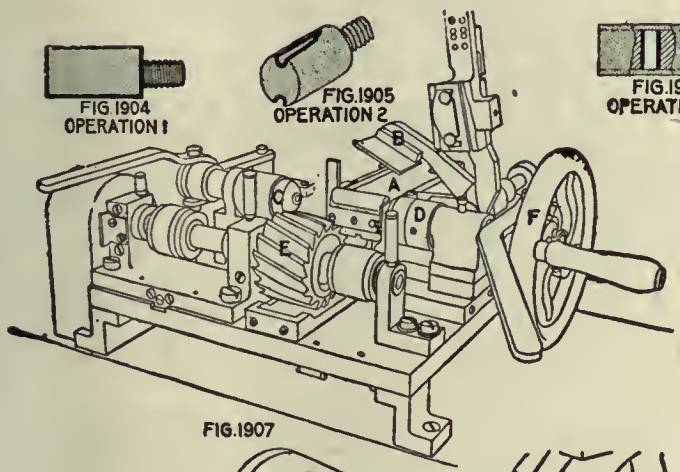

FIG.1907

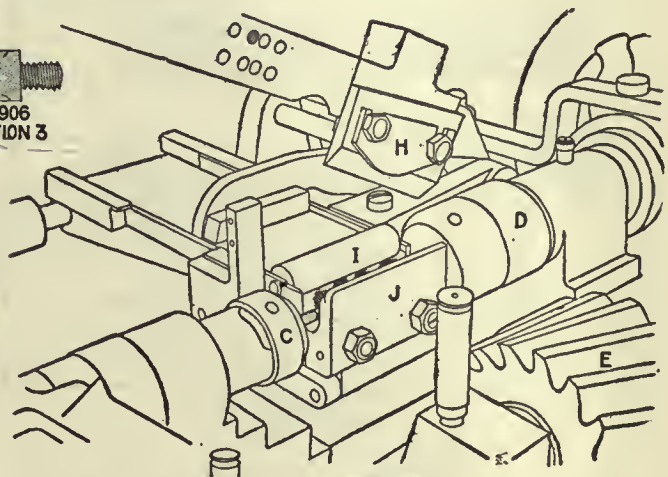

FIG.1908

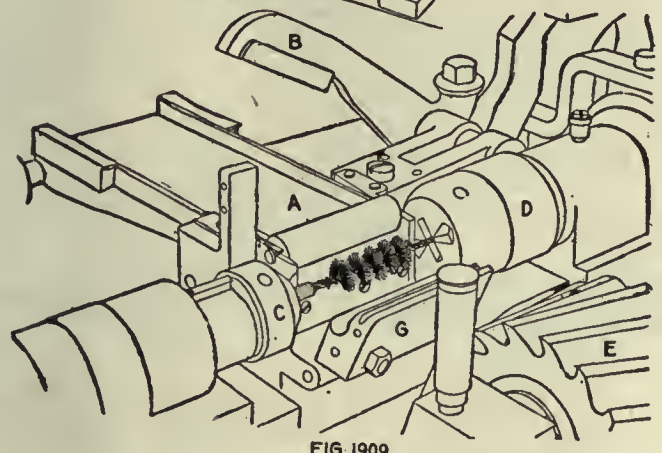

FIG.1909

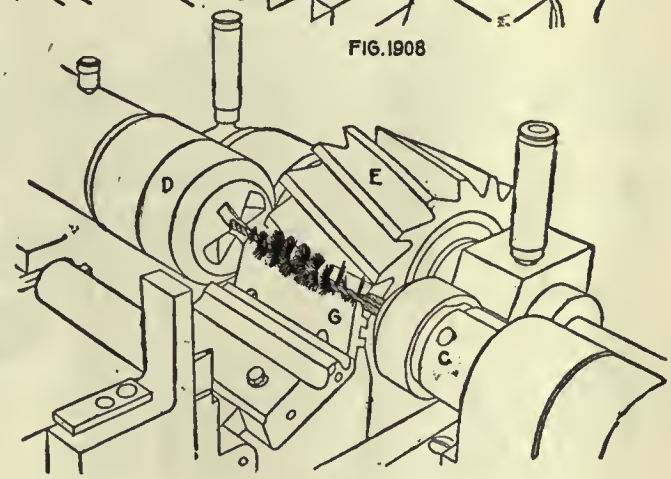

FIG.1910

1	Punching joint pin hole
1½	Burring operation 1
2	Milling edges and sides
3	Finish-grinding to thickness and shape
4	Burring hole

OPERATION 6. CUTTING OFF

Number of Operators—One. Description of Operation—Cutting bars in two. Apparatus and Equipment Used—Hilles No. 2 stock shears. Production—175 pieces per hr.

OPERATION A. FORGING FROM BAR

Transformation—Fig. 1918. Number of Operators—One. Description of Operation—Shaping from bar. Apparatus and Equipment Used—Billings & Spencer 400-lb. drop hammer. Gages—Fig. 1919, width, thickness and length. Production—160 pieces per hr.

OPERATION B. ANNEALING

Number of Operators—One. Description of Operation—Same as all other annealing operations. Apparatus and Equipment Used—Same as before.

OPERATION B-1. PICKLING

Number of Operators—One. Description of Operation—Same as all other picklings. Apparatus and Equipment Used—Same apparatus as before.

OPERATION C. TRIMMING

Machine Used—Snow-Brooks No. 1 press. Number of Operators per Machine—One. Punches and Punch Holders—Round shank. Dies and Die Holders—In shoe, by setscrew. Stripping Mechanism—Down through die. Average Life of Punches and Dies—15,000 pieces. Production—600 pieces per hr.

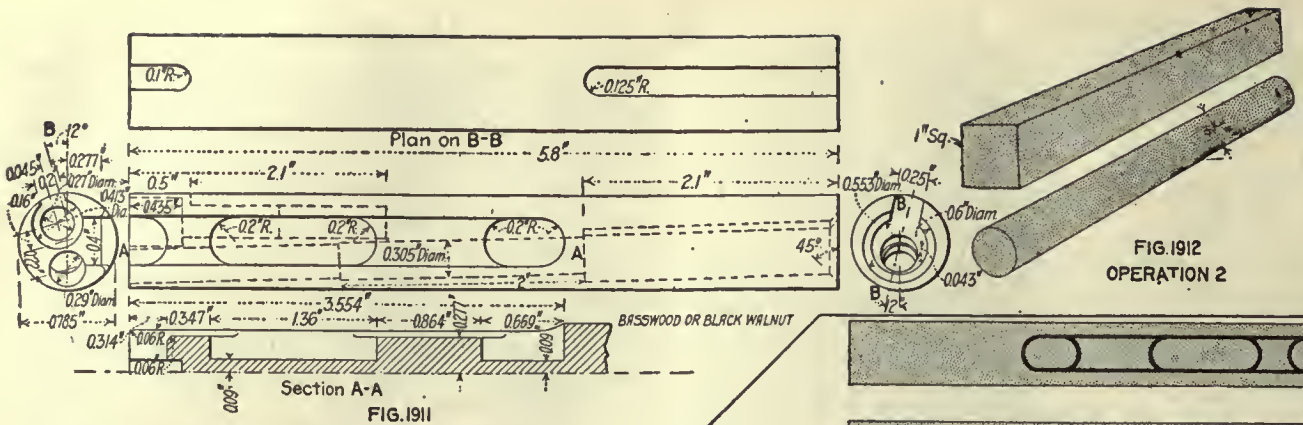

FIG. 1911

FIG. 1912
OPERATION 2

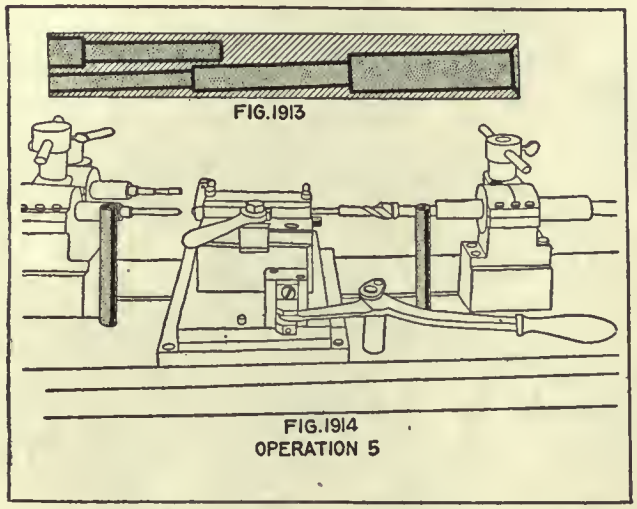

FIG. 1913

FIG. 1914
OPERATION 5

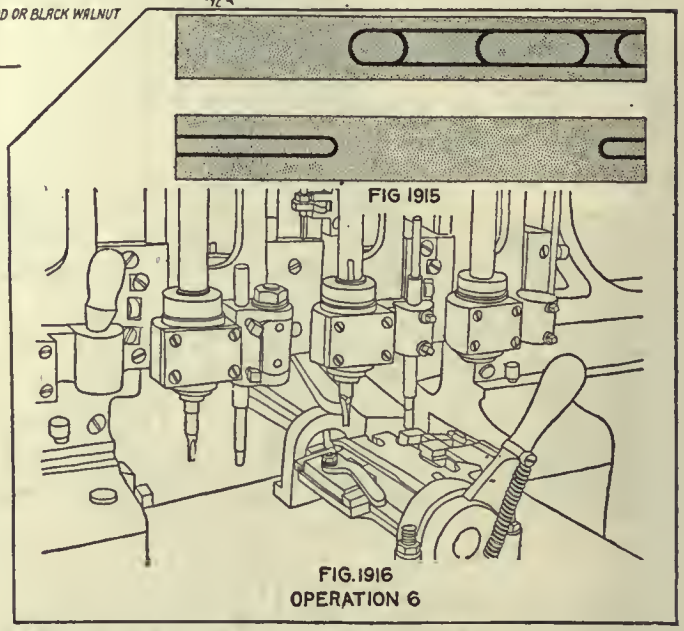

FIG 1915

FIG. 1916
OPERATION 6

OPERATION C-1. COLD DROPPING

Number of Operators—One. Description of Operation—Straightening after trimming. Apparatus and Equipment Used—Billings & Spencer 400-lb. drop hammer. Production—700 pieces per hr.

OPERATION D. BUFFING

Number of Operators—One. Description of Operation—Buffing sides. Apparatus and Equipment Used—Buffing wheel and holder. Production—350 pieces per hr.

OPERATION 1. PUNCHING JOINT PIN HOLES

Transformation—Fig. 1920. Machine Used—Garvin press, 1-in. stroke. Number of Operators per Machine—One. Punches and Punch Holders—Round shank. Dies and Die Holders—Held in shoe by setscrews. Stripping Mechanism—Steel stripper screwed to face of die. Average Life of Punches and Dies—1500 pieces between grindings. Lubricant—Oil on punches. Gages—Plug, for diameter. Production—650 pieces per hr.

OPERATION 1½. BURRING OPERATION 1

Number of Operators—One. Description of Operation—Removing burrs from operation 1. Apparatus and Equipment Used—File. Production—600 pieces per hr.

OPERATION 2. MILLING EDGES AND SIDES

Transformation—Fig. 1921. Machine Used—Pratt & Whitney No. 2 Lincoln miller. Number of Machines per Operator—

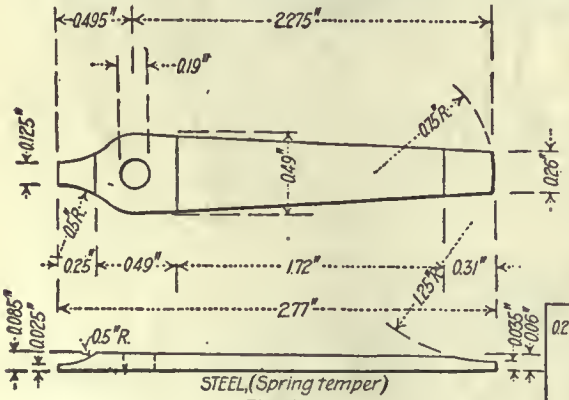

FIG. 1917

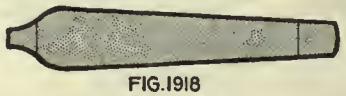

FIG. 1918
OPERATION A

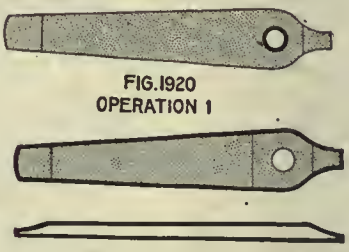

FIG. 1920
OPERATION 1

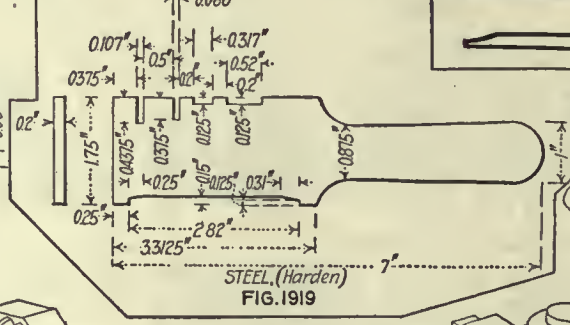

FIG. 1919

FIG. 1921

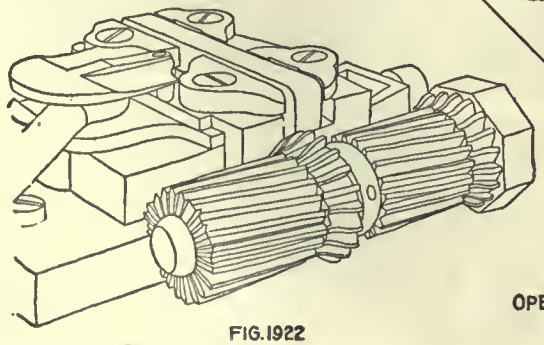

FIG. 1922

OPERATION 2

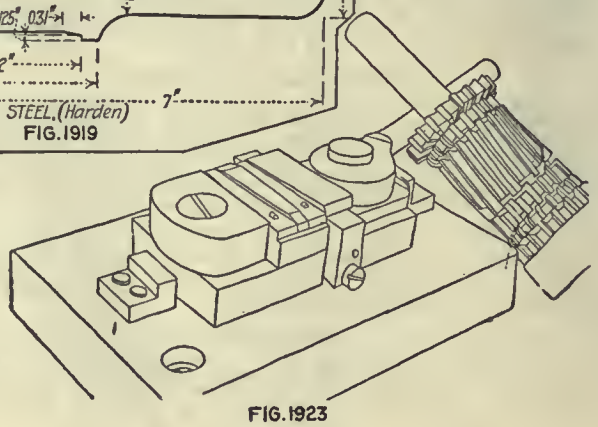

FIG. 1923

Four. Work-Holding Devices—Held by vise jaws, Fig. 1922 and 1923. Tool-Holding Devices—Standard arbor. Cutting Tools—Gang of milling cutters, Figs. 1922 and 1923. Number of Cuts—One. Cut Data—70 r.p.m.; ⅝-in. feed. Coolant—Cutting oil, put on with brush. Average Life of Tool Between Grindings—5000 pieces. Gages—Fig. 1924, width, thickness and length. Production—45 pieces per hr.

OPERATION 3. FINISH-GRINDING TO THICKNESS AND SHAPE

Number of Operators—One. Description of Operation—Grinding to thickness and shape. Apparatus and Equipment Used—Polishing jack and holder, wheel. Gages—Thickness and shape. Production—90 pieces per hr.

OPERATION 4. BURRING HOLE

Number of Operators—One. Description of Operation—Removing burrs from hole. Apparatus and Equipment Used—Reamer. Production—300 pieces per hr.

OPERATION ON THE SCREWDRIVER BLADE, LARGE

Operation

0	Cutting off
A	Forging from bar
B	Annealing
B–1	Pickling
C	Trimming

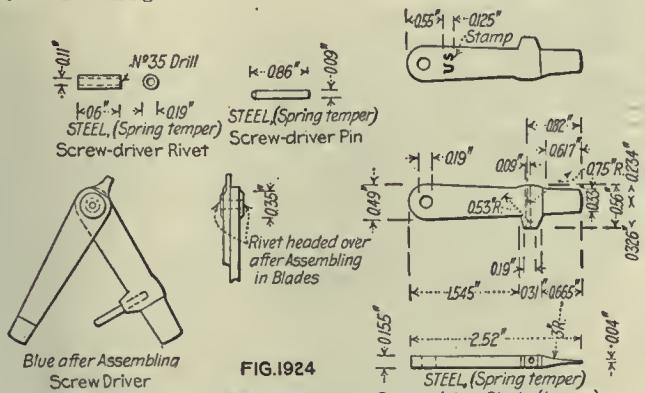

FIG. 1924

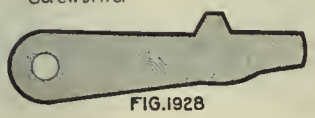

FIG. 1928

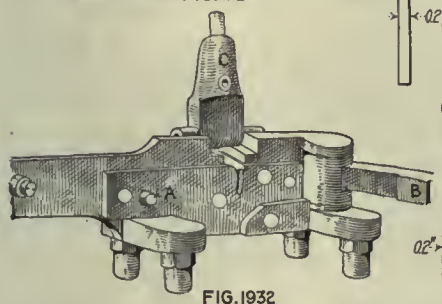

FIG. 1932

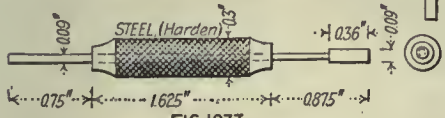

FIG. 1933

1 Punching joint pin hole
1½ Burring operation 1
2 Milling edges and sides of block
3 Stamping letters U.S.
4 Finish-grinding to thickness and shape
5 Drilling pin hole
8 Riveting small blade to large blade
9 Bluing
10 Assembling pin to large blade
11 Polishing blades

OPERATION 0. CUTTING OFF

Number of Operators—One. Description of Operation—Cutting stock in half. Apparatus and Equipment Used—Hilles No. 2 stock shear. Production—3000 pieces per hr.

OPERATION A. FORGING FROM BAR

Transformation—Fig. 1925. Number of Operators—One. Description of Operation—Shaping from bar. Apparatus and Equipment Used—Billings & Spencer 400-lb. drop hammer. Gages—Fig. 1927. Production—125 pieces per hr.

OPERATION B. ANNEALING

Number of Operators—One. Description of Operation—Same as all other anneailngs. Apparatus and Equipment Used—Same as before.

OPERATION B-1. PICKLING

Number of Operators—One. Description of Operation—Same as other pickling operations. Apparatus and Equipment Used—Same as before.

OPERATION C. TRIMMING

Machine Used—Snow-Brooks No. 1; 1½-in. stroke. Number of operators per Machine—One. Punches and Punch Holders—Round shank. Dies and Die Holders—In shoe, by setscrews. Stripping Mechanism—Down through die. Average Life of Punches and Dies—15,000 pieces. Production—60 pieces per hr.

OPERATION 1. PUNCHING JOINT PIN HOLE

Transformation—Fig. 1926. Machine Used—Stiles 1-in. stroke. Number of Operators per Machine—One. Punches and Punch Holders—Round shank. Dies and Die Holders—Held in shoe by setscrew. Stripping Mechanism—Steel strippers screwed to face of die. Lubricant—Punches oiled with cutting oil. Gages—Fig. 1927; also plug gage for hole. Production—650 pieces per hr.

OPERATION 1½. BURRING OPERATION 1

Number of Operators—One. Description of Operation—Removing burrs from operation 1. Apparatus and Equipment Used—File. Production—650 pieces per hr.

OPERATION 2. MILLING EDGES AND SIDES OF BLOCK

Transformation—Fig. 1928. Machine Used—Pratt & Whitney No. 2 Lincoln miller. Number of Machines per Operator—Four. Work-Holding Devices—Special vise jaws, similar to Figs. 1922 and 1923; work located on pins in punched holes, held by cams. Tool-Holding Devices—Standard arbor. Cutting Tools—Formed milling cutters; see Figs. 1922 and 1923. Number of Cuts—Two. Cut Data—70 r.p.m.; ⅝-in. feed. Coolant—Cutting oil, put on with brush. Average Life of Tool Between Grindings—5000 pieces. Gages—Fig. 1929, length and form. Production—125 pieces per hr.

OPERATION 3. STAMPING LETTERS U.S.

Number of Operators—One. Description of Operation—Stamping U.S. Apparatus and Equipment Used—Hand stamp and hammer. Production—500 pieces per hr.

OPERATION 4. FINISH-GRINDING TO THICKNESS AND SHAPE

Number of Operators—One. Description of Operation—Grinding side to finish. Apparatus and Equipment Used—Polishing jack and wheel. Gages—Fig. 1930; thickness and width of blade. Production—120 pieces per hr.

OPERATION 5. DRILLING PIN HOLE

Transformation—Fig. 1931. Machine Used—Pratt & Whitney 16-in. upright drilling machine. Number of Operators per Machine—One. Work-Holding Devices—Drill jig, Fig. 1932; work is located on pin A, held by clamp B, while drill bushing is in the swinging arm C. Tool-Holding Devices—Drill chuck. Cutting Tools—Twist drill. Number of Cuts—One. Cut Data—750 r.p.m.; hand feed. Coolant—Cutting oil, ⅛-in. stream. Average Life of Tool Between Grindings—250 pieces per grind. Gages—Fig. 1933, diameter and depth. Production—125 pieces per hr.

OPERATION 8. RIVETING SMALL BLADE TO LARGE BLADE

Number of Operators—One. Description of Operation—Riveting blades together. Apparatus and Equipment Used—Hammer, header and block. Production—125 pieces per hr.

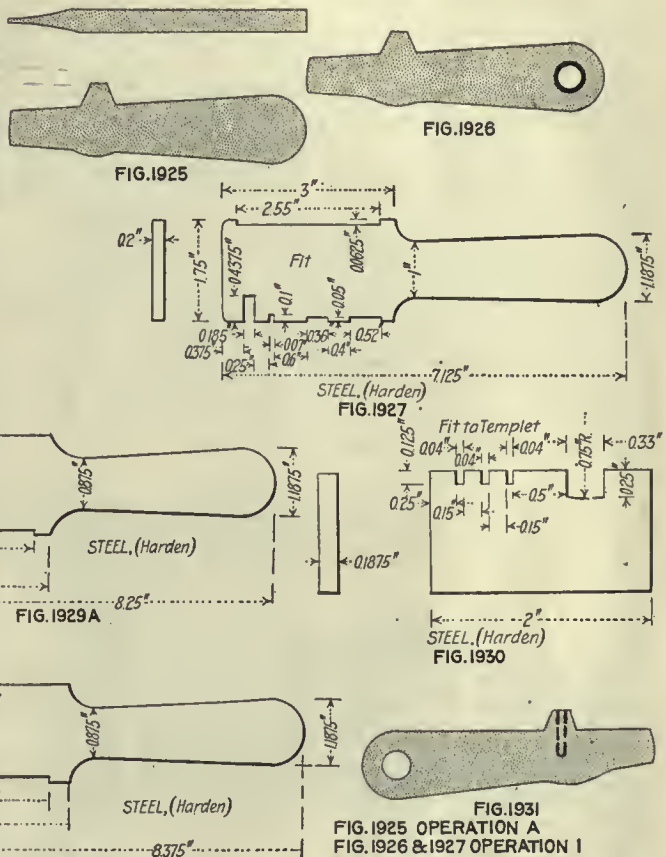

FIG. 1925

FIG. 1926

FIG. 1927

FIG. 1929A

FIG. 1929B

FIG. 1930

FIG. 1931

FIG. 1925 OPERATION A
FIG. 1926 & 1927 OPERATION 1
FIG. 1928, 1929 & 1930 OPERATION 2
FIG. 1931, 1932 & 1933 OPERATION 5

Making the Stock

By Ethan Viall

The walnut stock of the Springfield rifle extends forward under nearly the entire length of the barrel, only a short part of the muzzle end being uncovered where the bayonet is attached. The machine work is unusually accurate and exacting and is largely done on specially made machines. Some of these were made in the arsenal shop though most of them were made by outside shops, the names of which are mentioned, where important.

The Government specifications for the blanks from which stocks for the military rifle are made are as follows: Black walnut in the rough, 2⅜ in. thick, 45¼ in. long, measured in a straight line on top of stock, 6 in. wide at butt end and 1 1/16 in. at the tip end, and otherwise to conform in other dimensions and shape to an iron form, actual size, which is furnished to successful bidders. All stocks showing wormholes, sapwood, wind shakes, splits, checks, cracks, knots, crooked grain, any evidence of brashy wood, unseasonable age, belted timber or dry rot will be rejected. The wood must be hard, straight-grained and sound in every particular. Ends of stock must be painted.

The shape and dimensions of the rough blanks just referred to are given in Fig. 1934. The approximate line of grain is also indicated. The shape and dimensions of the finished stock are given in Fig. 1935, and in many cases these dimensions will be all that is needed to understand certain gaging or machining operations, when taken together with the other data accompanying them. Many of the machines used for various operations on both the stock and the hand guard are similar, and in these cases the reader desiring more complete data can refer to like machines used on one or the other of the pieces. The sequence of operations, on the stock of the Springfield rifle, regardless of how the numbers run, is as follows:

*Copyright, 1917, McGraw-Hill Publishing Co., Inc.

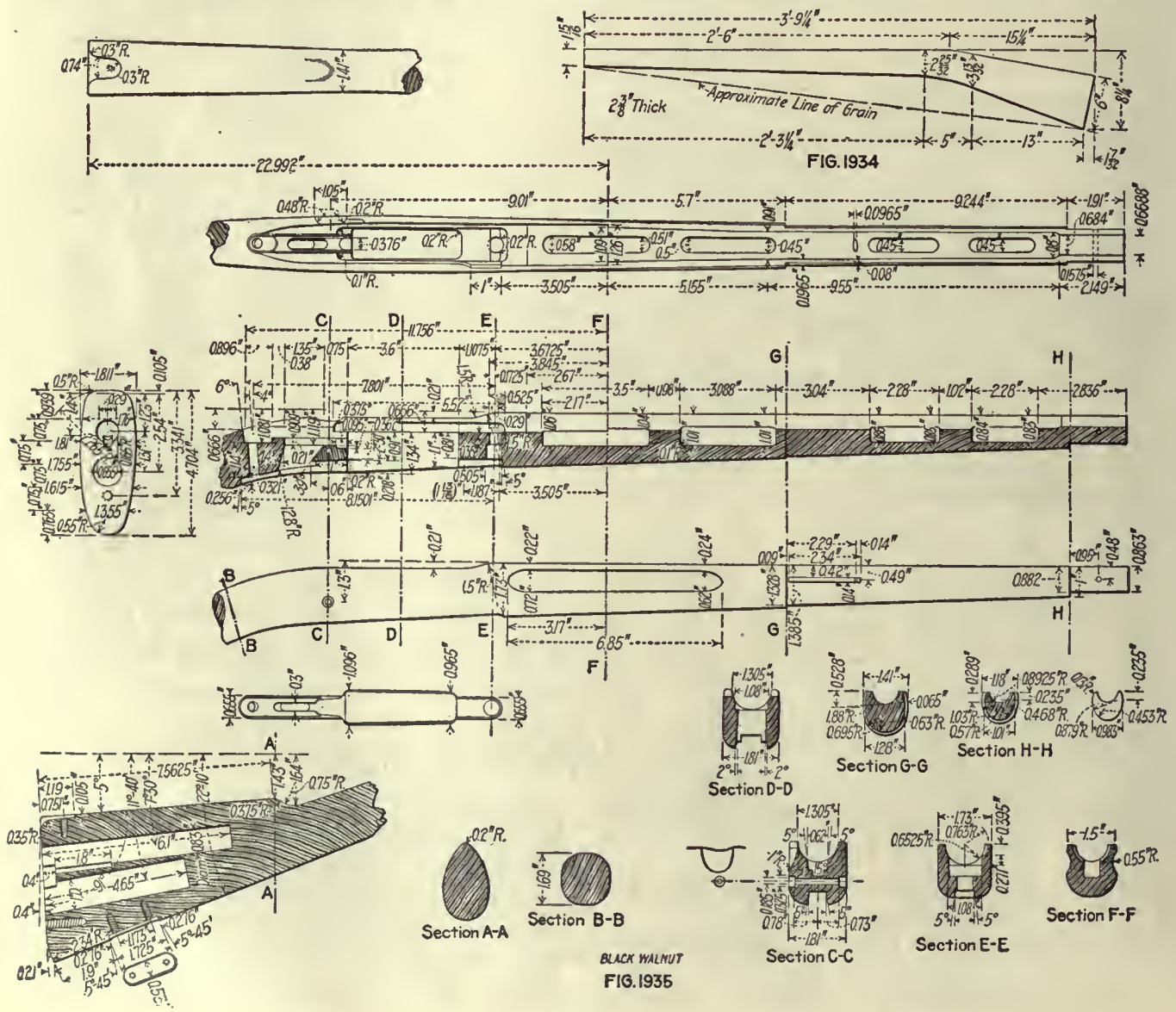

FIG. 1934

FIG. 1935

1 Square one side
2 Plane to thickness
3–A Rough-face top
3–B Trim ends
3–C Center muzzle end; drill butt for driver pins
4 Mark and saw to pattern to remove stock
4½ Cornering
5–A Rough-turn front end (first rough-turn)
5–B Press in driver plate
5–C Rough-turn rear end (second rough-turn)
5½ Straighten
Inspect
6 Spot for working points
7 Groove for barrel
8 Rough-cut for receiver
9 Profile sides and bottom and top of butt to finish lines
10 Profile top edge to finish
12 Shape butt for plate and trim to length
13 Cut top of butt for tang of plate and bore screw holes
11 Cut for cutoff thumb-piece
14 Turn butt and stock under receiver for finish
22 Cut right top off edge at receiver opening
15 Finish-turn for bands
16 Turn between bands
20 Bore for upper-band screw
Inspect
18 Cut grasping groove
17 Cut for guard, bore guard screw holes and trigger slot
21 Cut for lower-band spring
23 Round edge under upper band (hand)
19 Cut for swivel plate and bore screw holes
24 Fit receiver (hand)
25 Fit guard (hand)
26 Shape to tang of receiver, edges of barrel groove to hand guard, and to guard and swivel plate (hand)
Inspect
27 Shape to butt plate and sand to finish (hand)
30 Oil (boiled linseed)
28 Boring for oiler and thong case, and to lighten stock
29 Fit lower-band spring (hand)
32 Drilling for stock screw
33 Assembling with stock screw
34 Oil with cosmoline
35 Bore for spare-parts container
Inspect

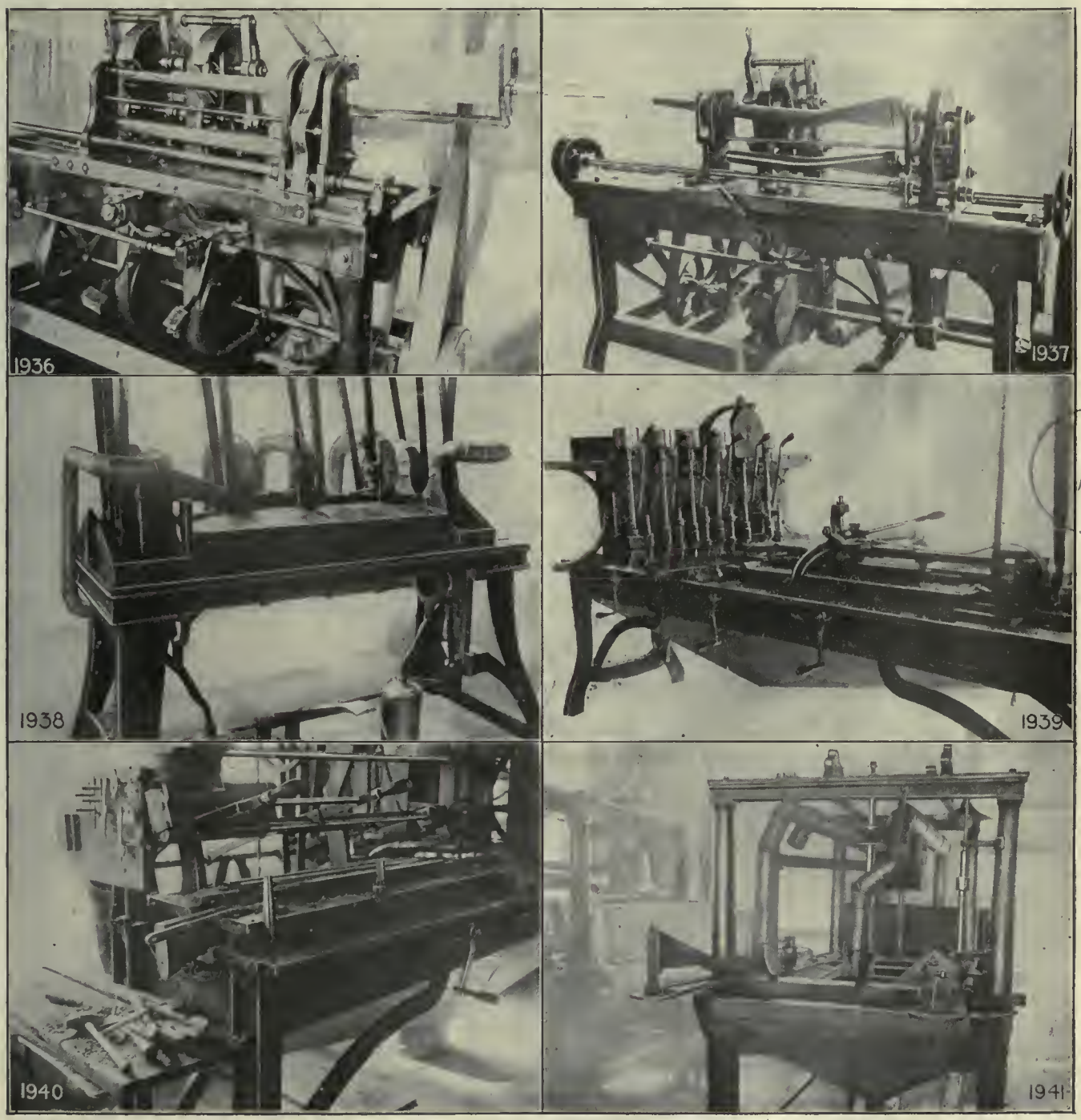

FIGS. 1936 TO 1941. VARIOUS OPERATIONS ON THE STOCK

Fig. 1936—The first rough-turn, operation 5-A. Fig. 1937—The second rough-turn, operation 5-C. Fig. 1938—Spotting for working points, operation 6. Fig. 1939—Right-hand end of barrel-bedding machine. Fig. 1940—Left-hand end of barrel-bedding machine. Fig. 1941—Special shaping machine used for operation 9

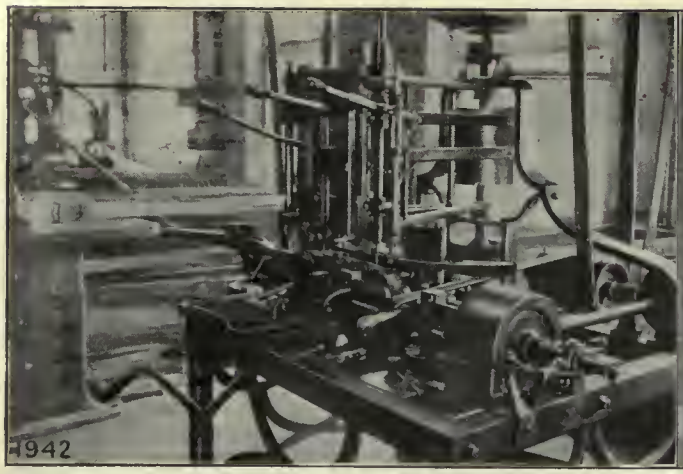

FIG. 1942. BEDDING AND DRILLING MACHINE

FIG. 1943. CUTTING GRASPING GROOVES, OPERATION 18

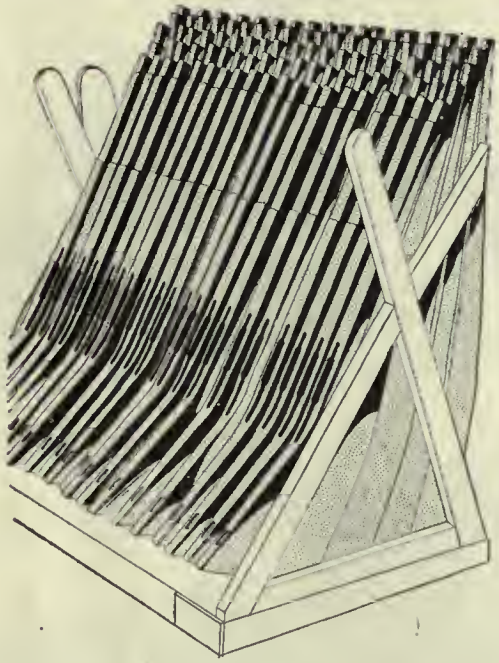

FIG.1944

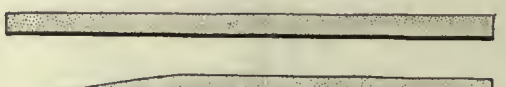

FIG.1945

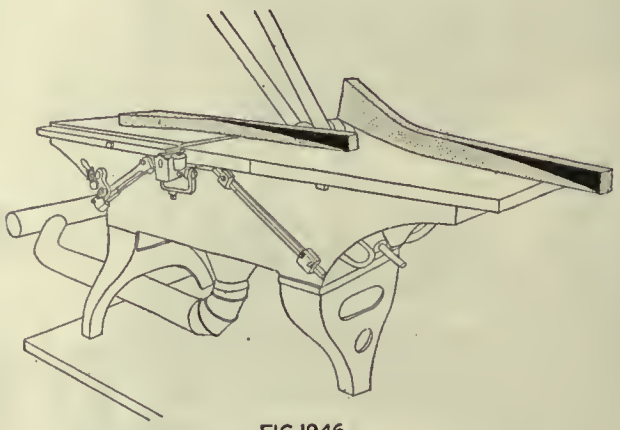

FIG.1946

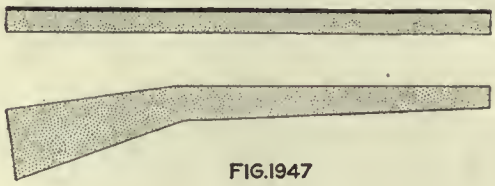

FIG.1947

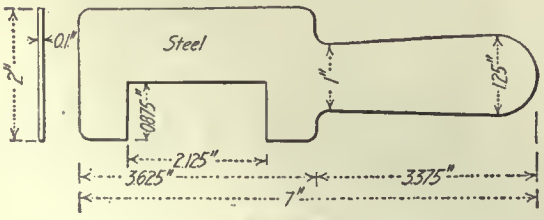

FIG.1949

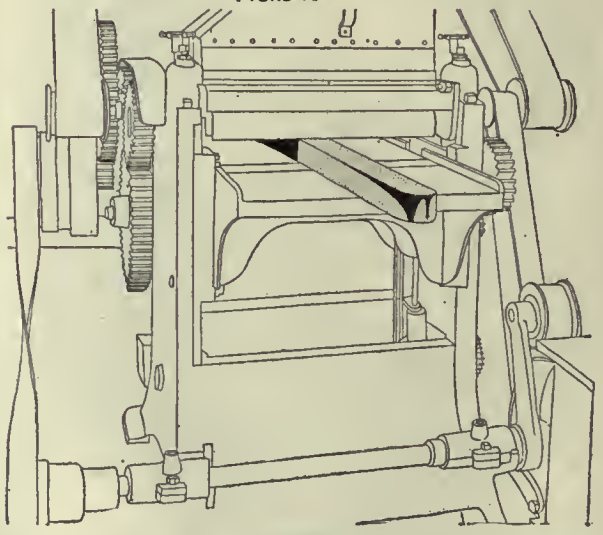

FIG.1948

OPERATION 1. SQUARE ONE SIDE

Transformation—Fig. 1945. Machine Used—Buzz planer, hand feed, Fig. 1946. Number of Operators per Machine—One. Work-Holding Devices—None. Tool-Holding Devices—Oliver safety planer head. Cutting Tools—Knives in planer head. Number of Cuts—Enough to clean up. Cut Data—Head runs about 3800 r.p.m. Average Life of Tool Between Grindings—700 pieces. Production—1584 in 8 hr.

OPERATION 2. PLANE TO THICKNESS

Transformation—Fig. 1947. Machine Used—Roll-feed planer, Fig. 1948. Number of Operators per Machine—Two. Tool-Holding Devices—Regular planer head. Number of Cuts—One. Cut Data—Head runs about 3800 r.p.m. Average Life of Tool Between Grindings—Stoned, 1000 pieces; ground every 26-hr. run. Gages—Fig. 1949. Production—4840 pieces per 8 hr.

OPERATION 3-A. ROUGH-FACE TOP

Transformation—Fig. 1950. Machine Used—Circular saw, automatic feed, Fig. 1951. Number of Operators per Machine—One. Work-Holding Devices—Handwheel clamps on carriage. Cutting Tools—Circular saw, 20 in. in diameter, 0.12 in. thick, 2-in. pitch. Number of Cuts—One. Cut Data—Runs about 3000 r.p.m. Average Life of Tool Between Grindings—700 pieces. Production—85 per hr.

OPERATION 3-B. TRIMMING ENDS

Transformation—Fig. 1952. Machine Used—Circular saw, sliding carriage, Fig. 1953. Number of Operators per Machine—One. Work-Holding Devices—Saw carriage. Cutting Tools—Circular saw, 17 in. in diameter by 0.09 in. thick, $\frac{5}{8}$ pitch. Number of Cuts—Two, one on each end. Cut Data—Saw runs about 4000 r.p.m. Average Life of Tool Between Grindings—1500 pieces. Special Fixtures—Top edge stop; end stop; hinged hold-down hand lever, as shown. Gages—Common rule. Production—85 per hr.

OPERATION 3-C. CENTER MUZZLE END; DRILL BUTT FOR DRIVER PINS

Transformation—Fig. 1954. Machine Used—Special double-end drill, Fig. 1955. Number of Operators per Machine—One. Work-Holding Devices—Bed stops and hand-lever clamp, as shown. Cutting Tools—One $\frac{1}{4}$-in. triangular-point center drill and two 0.306-in. diameter wood bits; three tools fed in at once by foot lever, one enough to make a center and the two in the butt to a depth of 0.3 in. Average Life of Tool Between Grindings—7000 to 8000 pieces. Gages—Fig. 1956. Production—85 per hr.

OPERATION 4. MARK AND SAW TO PATTERN

Transformation—Fig. 1957. Machine Used—Band saw, Fig. 1958. Number of Operators per Machine—One. Cutting Tools—Band saw. Number of Cuts—One on each edge. Average Life of Tool Between Grindings—About 4 or 5 hr. steady sawing. Gages—Fig. 1959. Production—704 per 8 hr. Note—Operator lays templet on stock and marks outline with pencil, then saws to lines.

OPERATION 4½. CORNERING

Transformation—Fig. 1960. Machine Used—Buzz planer. Number of Operators per Machine—One. Number of Cuts—One or two light cuts. Production—2640 per 8 hr. Note—This is simply the removing of the left-hand top edge, in order that the wood will not splinter off in the subsequent turning operation.

OPERATION 5-A. FIRST ROUGH-TURN

Transformation—Fig. 1961. Machine Used—Blanchard type lathe, Fig. 1936. Number of Machines per Operator—Three. Work-Holding Devices—Revolving fixture with two centers and two clamp screws. Tool-Holding Devices—Two wood-milling cutter heads. Cutting Tools—Fig. 1962. Number of Cuts—Two; first cutter is started about 6 in. from end and

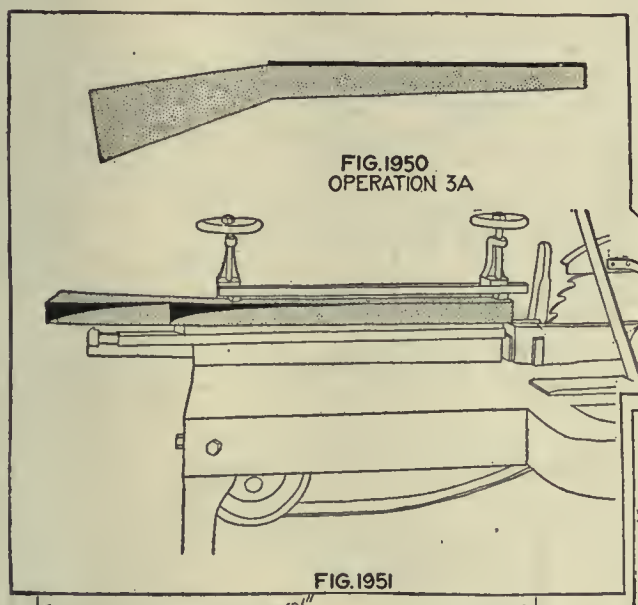
FIG.1950
OPERATION 3A

FIG.1951

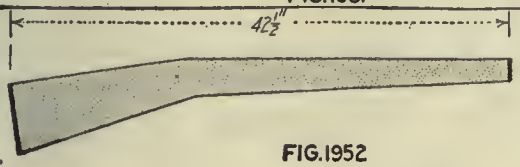

FIG.1952

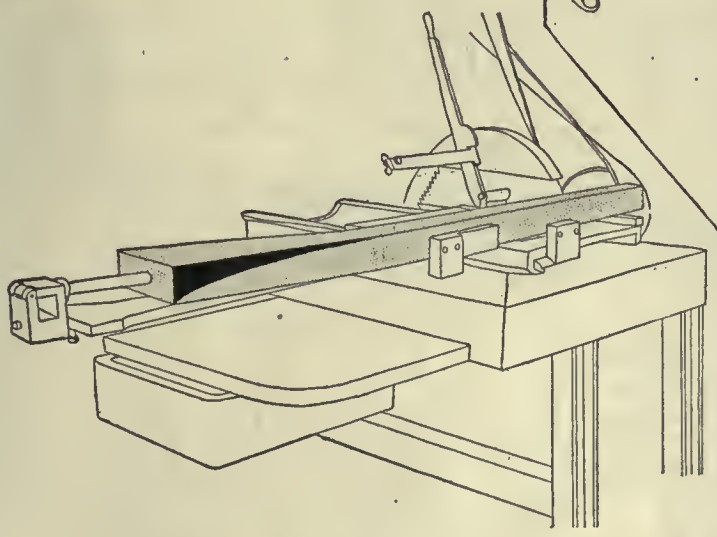
FIG.1953 OPERATION 3B

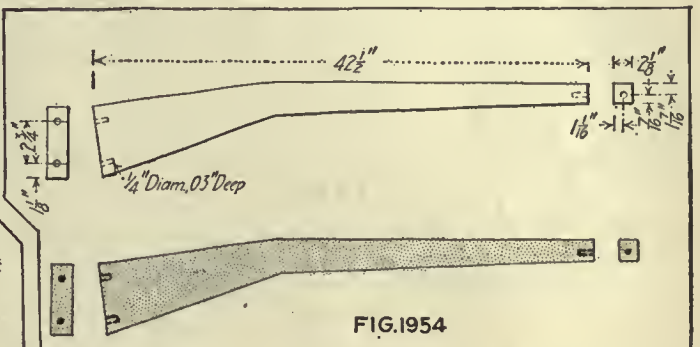

FIG.1954

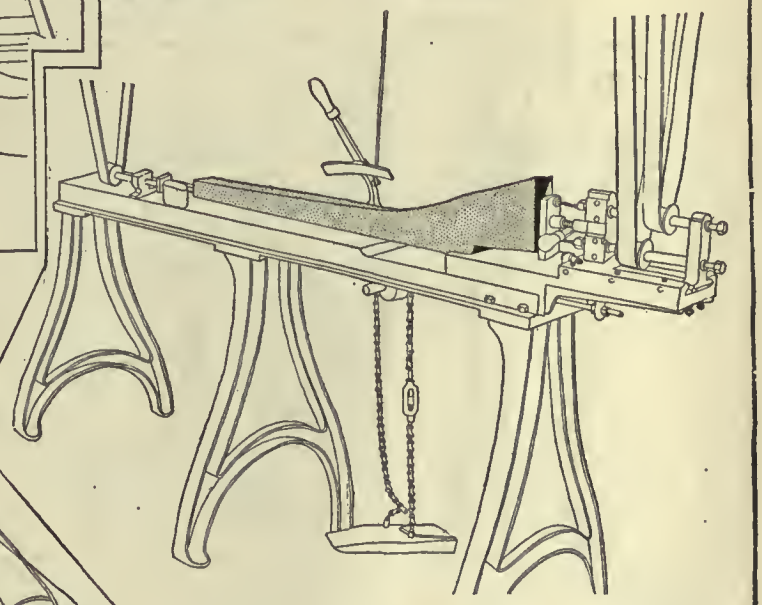

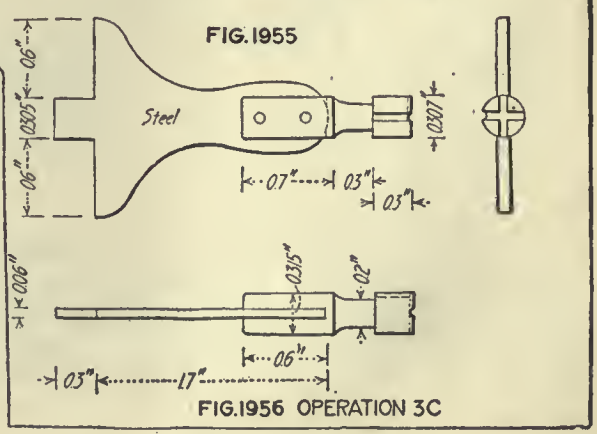

FIG.1955

FIG.1956 OPERATION 3C

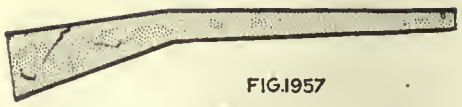

FIG.1957

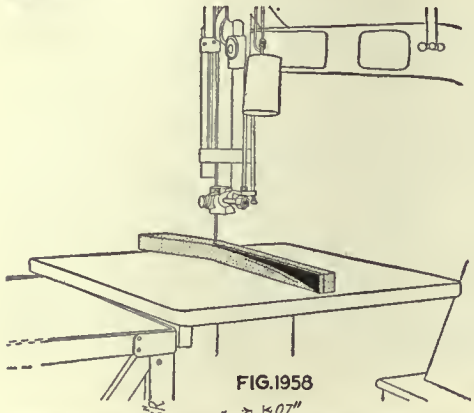

FIG.1958

NOTE
FIG.1960 = OP.4.5.
FIG. 1957 } OP.4
" 1958 }
" 1959 }
FIG. 1961 } OP.5A
" 1962 }
" 1963 }

FIG.1961

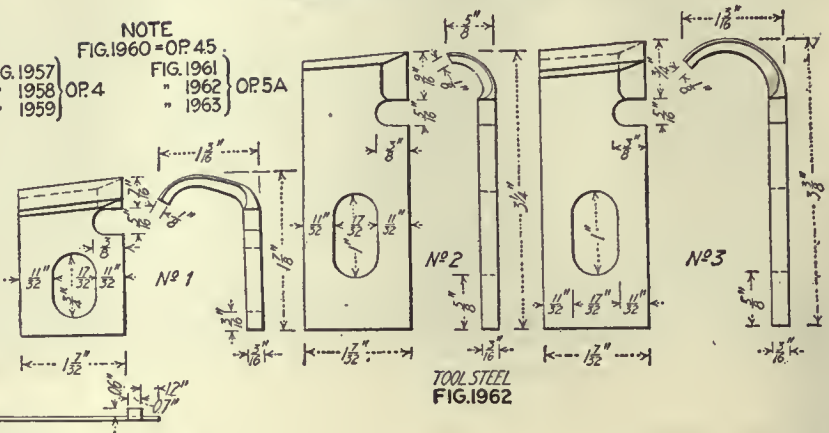

FIG.1962

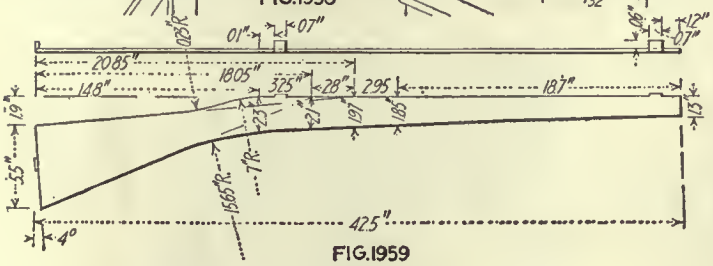

FIG.1959

FIG.1960

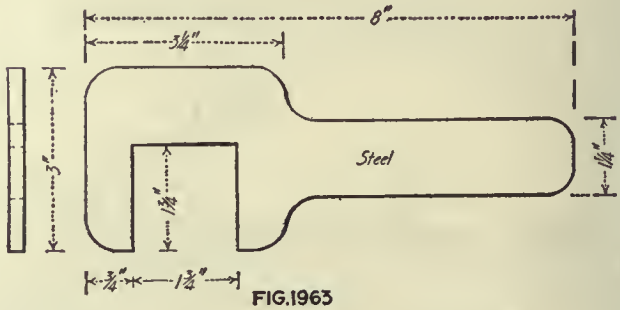

FIG.1963

FIG.1964

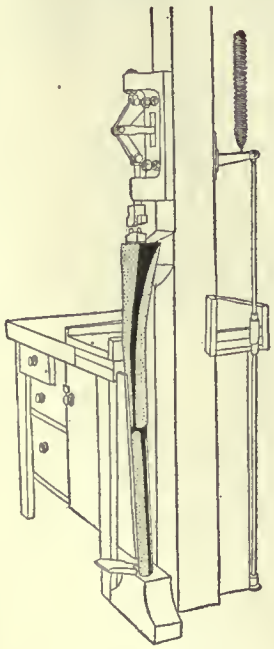

FIG. 1965

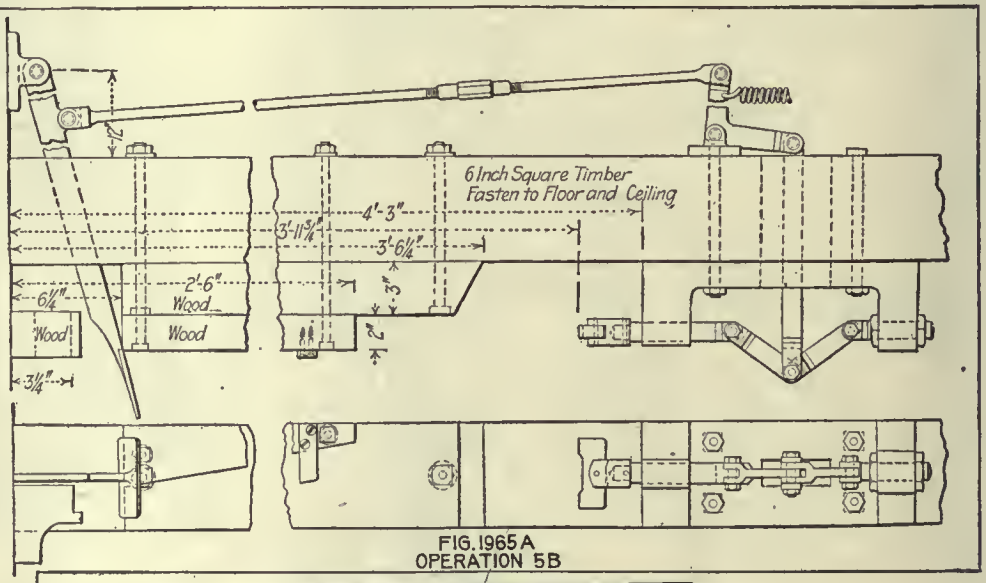

FIG. 1965 A
OPERATION 5B

FIG.1966

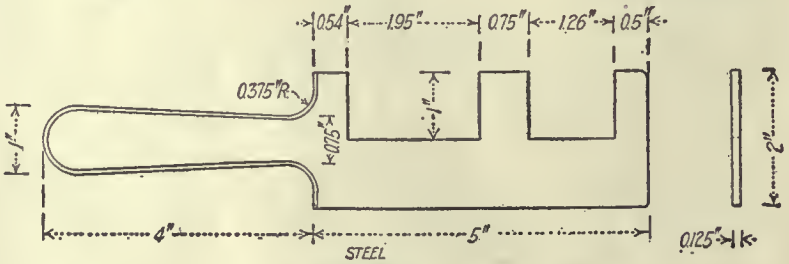

FIG.1967
OPERATION 5C

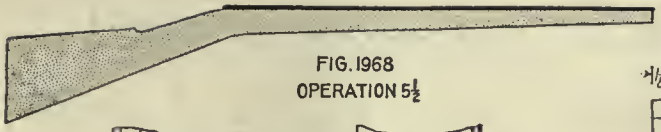

FIG. 1968
OPERATION 5½

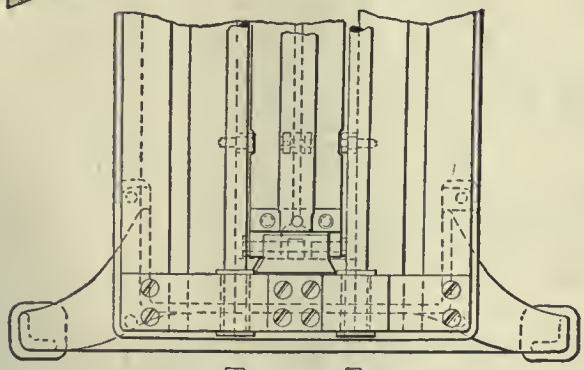

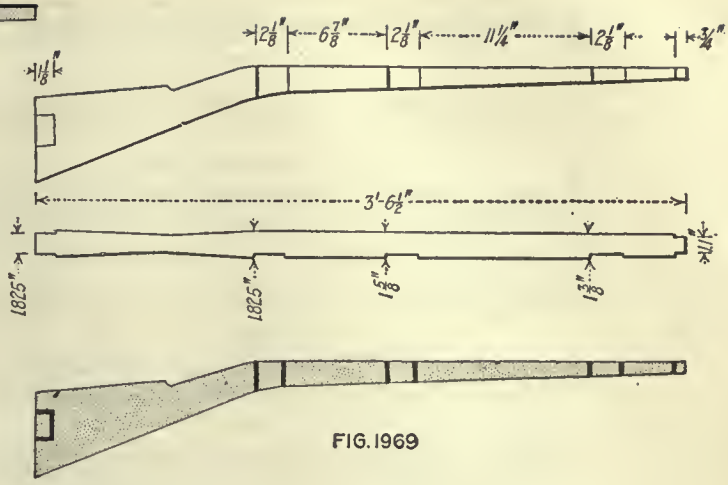

FIG. 1969

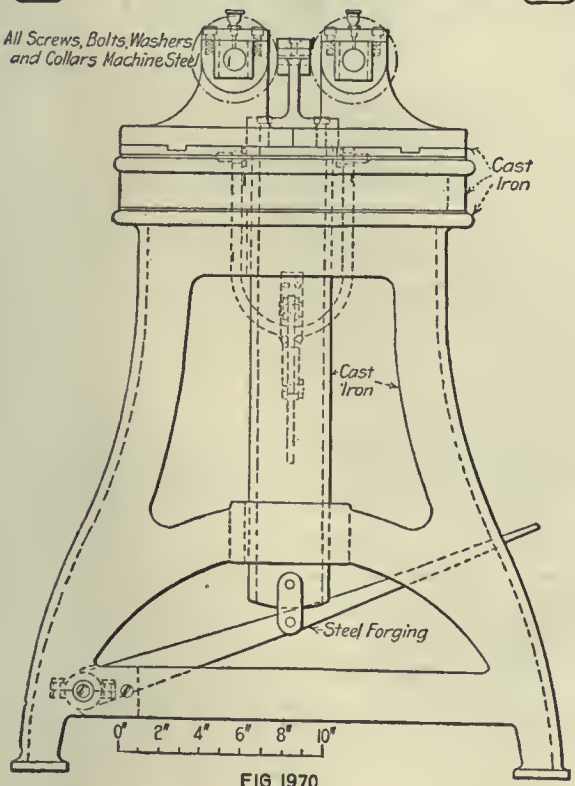

FIG. 1970

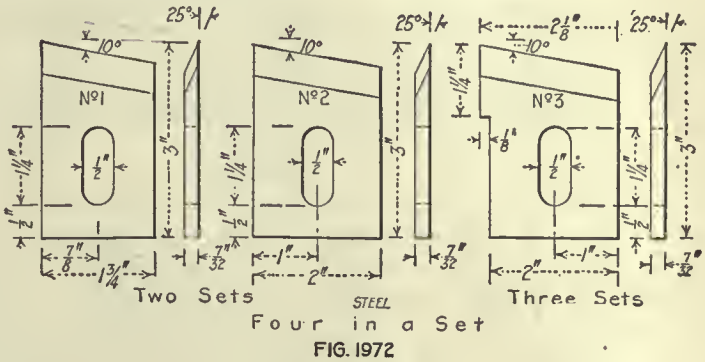

FIG. 1972

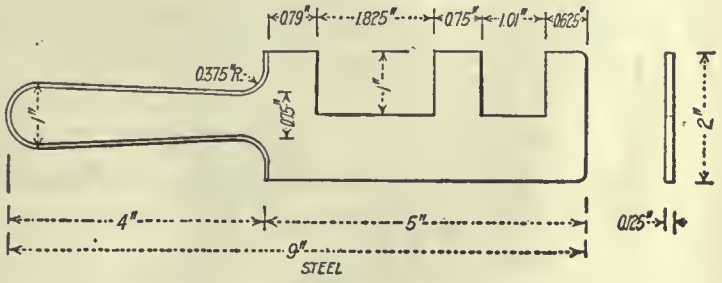

FIG. 1973

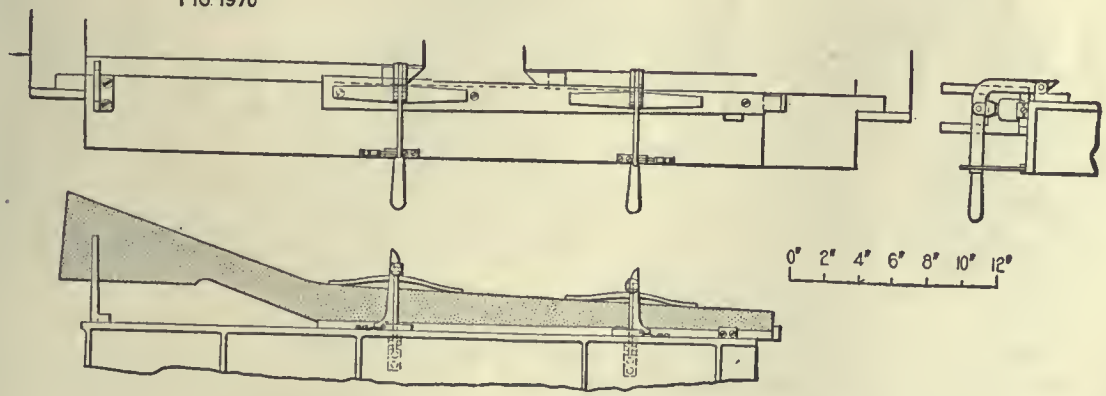

FIG. 1971
OPERATION 6

feeds toward butt; second cutter begins when first has fed along 6 in., the total cut being about 18½ in. Cut Data—Work turns about 50 r.p.m., cutters about 5000 r.p.m. Average Life of Tool Between Grindings—Stoned every 8 hr. Gages—Fig. 1963. Production—300 in 8 hr. for three machines. Note—One operator runs one lathe on this work and two on butts.

OPERATION 5-B. PRESS IN DRIVER PLATE

Transformation—Fig. 1964. Machine Used—Foot press, Fig. 1965. Number of Operators per Machine—One. Special Fixtures—Fig. 1965-A.

OPERATION 5-C. SECOND ROUGH-TURN

Transformation—Fig. 1966. Machine Used—Blanchard type lathe, Fig. 1937. Number of Machines per Operator—Three. Work-Holding Devices—Wedge chuck and driving plate on center, as shown. Tool-Holding Devices—Cutter head. Number of Cuts—One. Cut Data—Work turns about 50 r.p.m., cutter 5000 r.p.m. Average Life of Tool Between Grindings—Stoned every 8 hr. Gages—Fig. 1967, and master form on machine. Production—300 in 8 hr. for three machines.

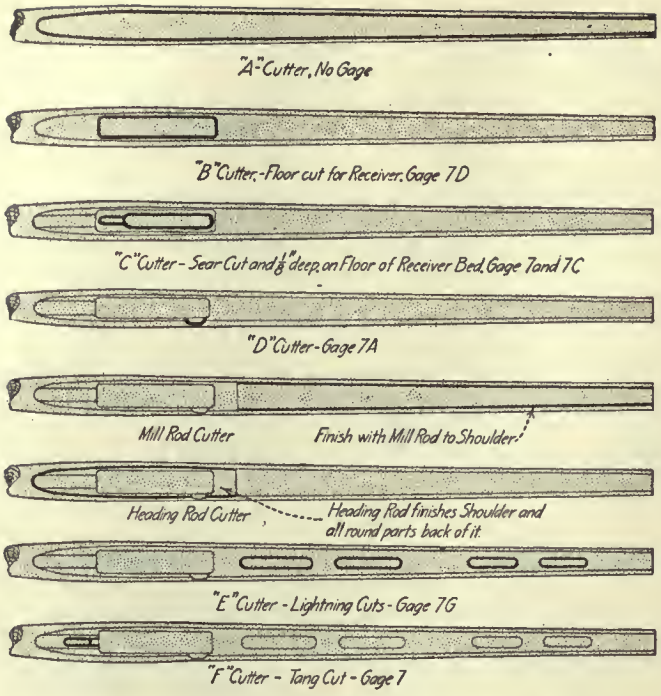

FIG.1974

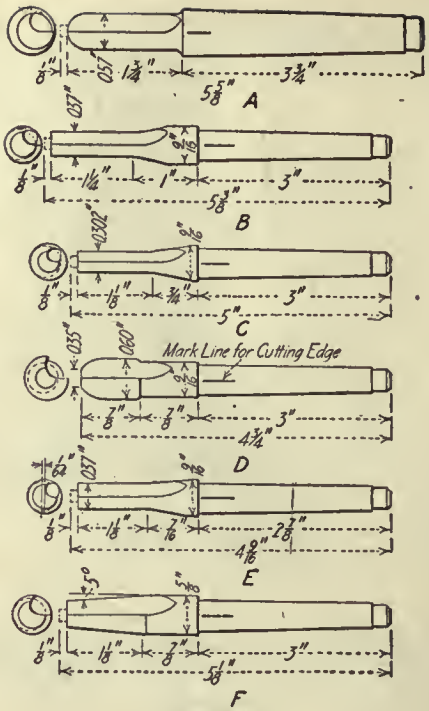

FIG.1976

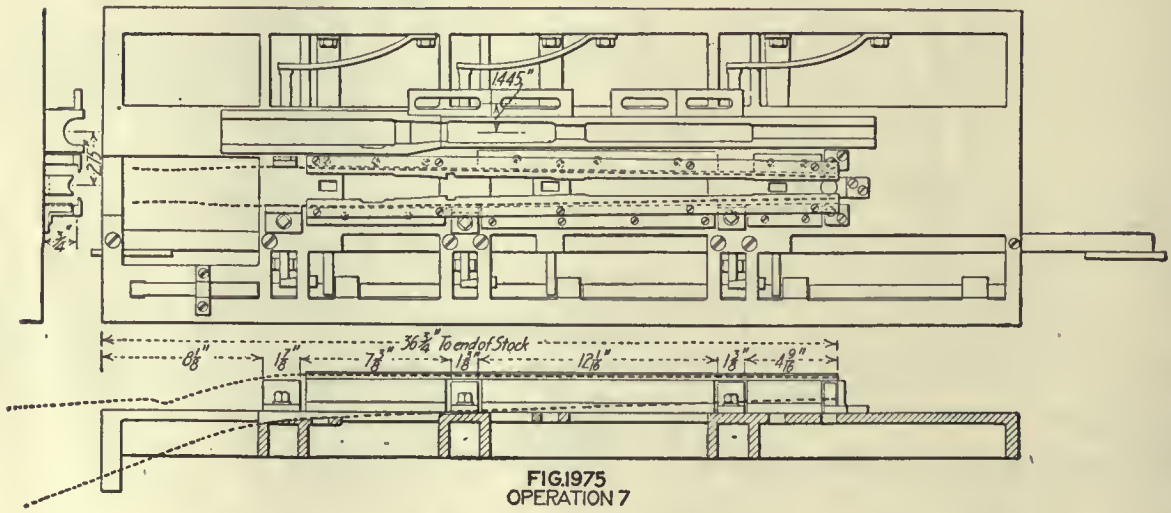

FIG.1975
OPERATION 7

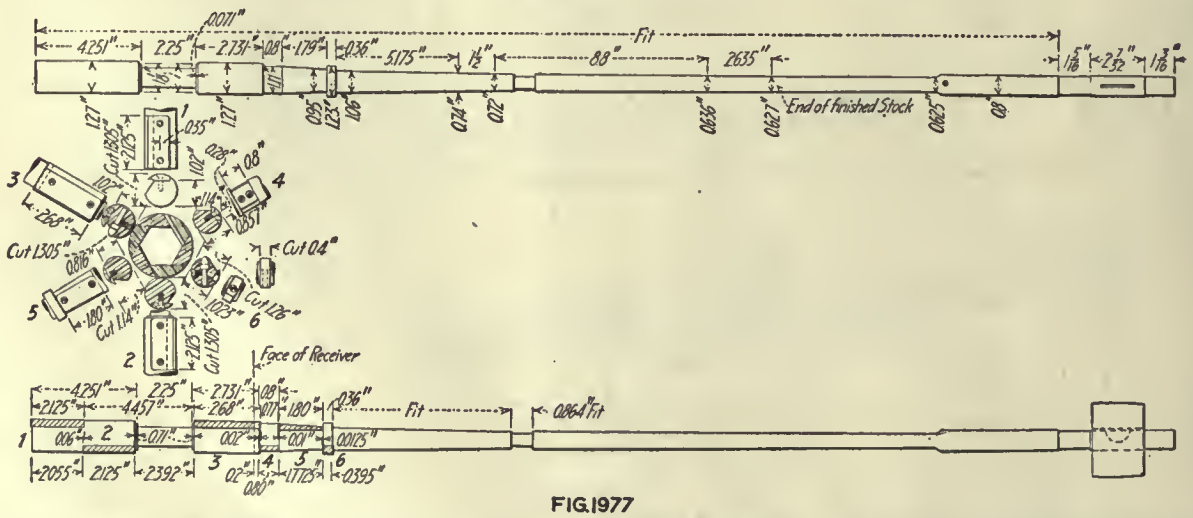

FIG.1977

OPERATION 5½. STRAIGHTEN

Transformation—Fig. 1968. Machine Used—Buzz planer. Number of Operators per Machine—One. Number of Cuts—Just enough to straighten top edge. Production—2640 per 8 hr. Note—This operation is merely to straighten and smooth the top after the rough-turning is done; after this is done, the inspector goes over all the stocks carefully for the first general inspection, using the various gages and looking for flaws of any kind.

OPERATION 6. SPOT FOR WORKING POINTS

Transformation—Fig. 1969. Machine Used—Special spotting machine, Figs. 1938 and 1970. Number of Operators per Machine—One. Work-Holding Devices—Clamping jig on carrier of vertical slide, Fig. 1971. Tool-Holding Devices—Cutter heads. Cutting Tools—Fig. 1972. Number of Cuts—Seven at once. Average Life of Tool Between Grindings—2000 pieces. Gages—Fig. 1973. Production—1760 per 8 hr. Note—Work is carried down past the cutters and back, stopping above them.

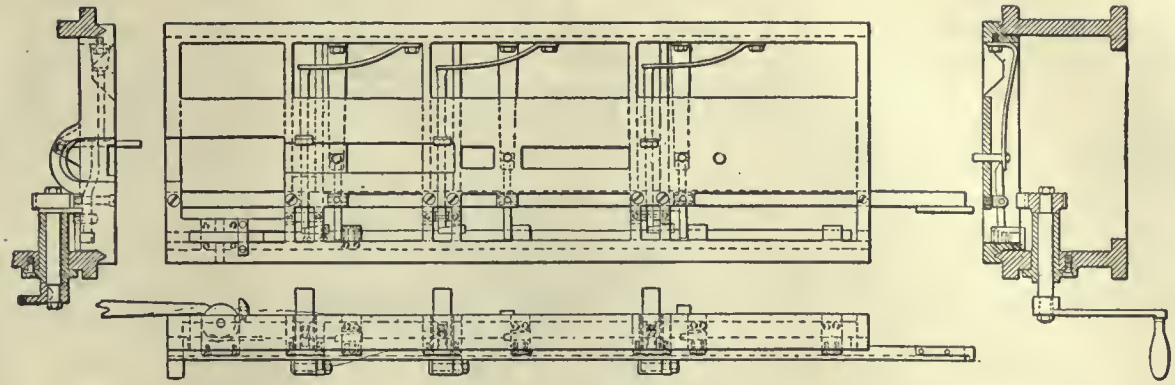

FIG.1978

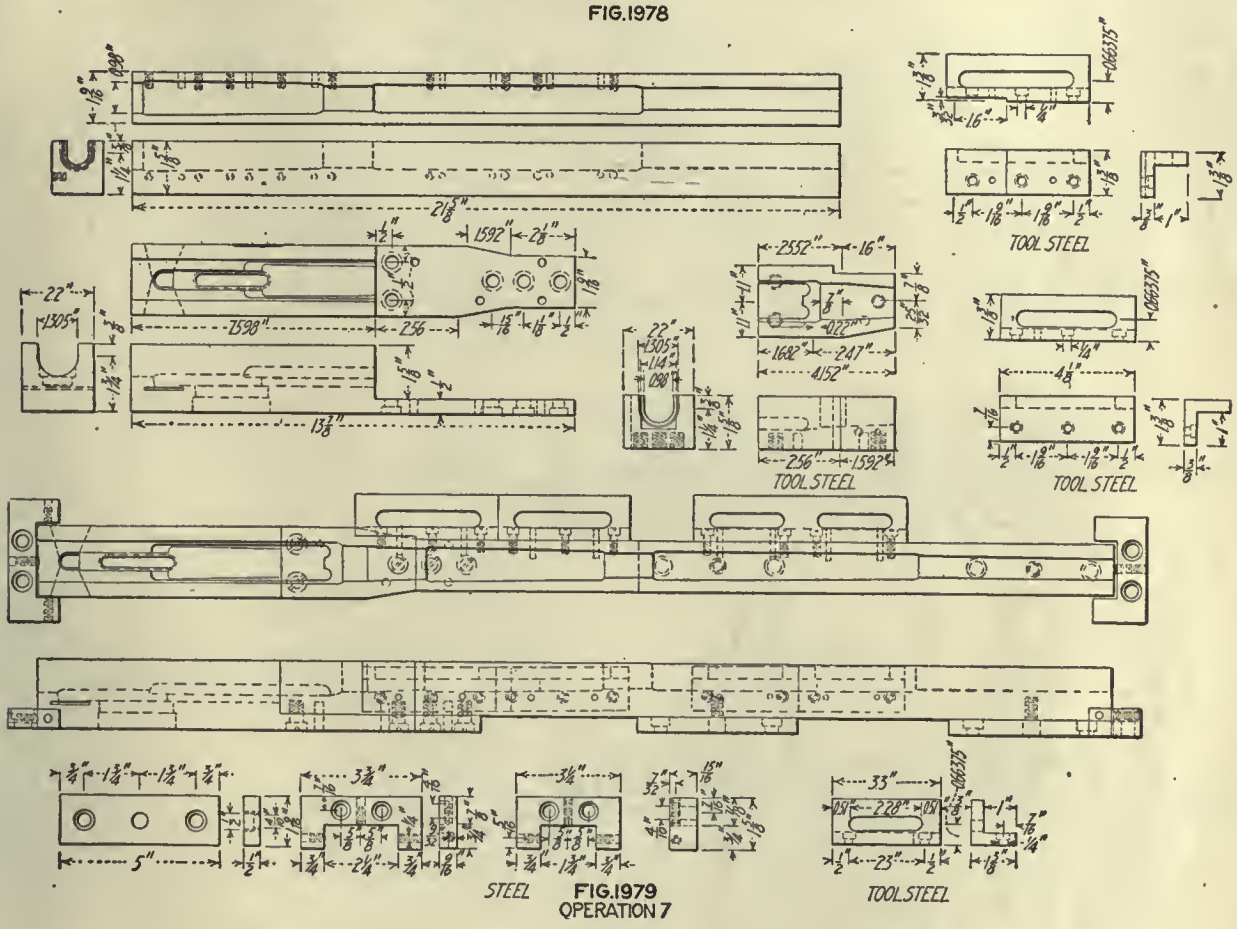

FIG.1979
OPERATION 7

OPERATION 7. GROOVE FOR BARREL

Transformation—Fig. 1974. Machine Used—Special, made by Ames Manufacturing Co., Chicopee, Mass., Figs. 1939 and 1940. Number of Operators per Machine—One. Work-Holding Devices—Fixture, Fig. 1975. Cutting Tools—Profile tools, Fig. 1976; heading rod, Fig. 1977. Cut Data—Spindles run about 4200 r.p.m. Average Life of Tool Between Grindings—Stoned twice a day. Special Fixtures—Carriage, Fig. 1978; master form, Fig. 1979; mill rod, Fig. 1980; profile spindle heads, Fig. 1981; heading rod frame, Fig. 1982. Gages—Fig. 1983. Production—104 in 8 hr.

In studying the work, it will be seen that under ordinary shop conditions a number of the operations, while listed separately, are done in a "group" by one man who may use several machines or fixtures in succession.

The inspections indicated at various points in the list of operations are of two kinds. The first is what the workman himself gives his output, using the gages furnished for this purpose; and the other is by special inspectors who work in a separate room by themselves. All the work is brought to them at different stages of the process, and it is to the test by these inspectors that reference is made where the word "Inspect" occurs.

The first operation on the rough-sawed stocks is to square one side on a buzz planer, as shown in Fig. 1946, the cut being enough to clean up one side completely. Naturally, no gages are needed. The planing to thickness is done on a roll-feed planer, Fig. 1948, and the sheet-metal gage, Fig. 1949, is used.

For the third operation, or rough-facing the top, a circular saw with automatic feed, Fig. 1951, is used. A thin strip is sawed off the top, squaring it, and with the two planed sides forming temporary working points. Following this, the ends are trimmed in a specially fitted circular saw, Fig. 1953, with stops so arranged that the stock may be reversed and the ends trimmed separately with the same saw.

In centering the muzzle end and drilling the butt end for driver-plate pins, a double-end drilling machine, Fig. 1955, is used. The machine is so arranged that, as the operator presses the lever clamp down, a wire pulls the shifter over and starts the machine. The two drill heads

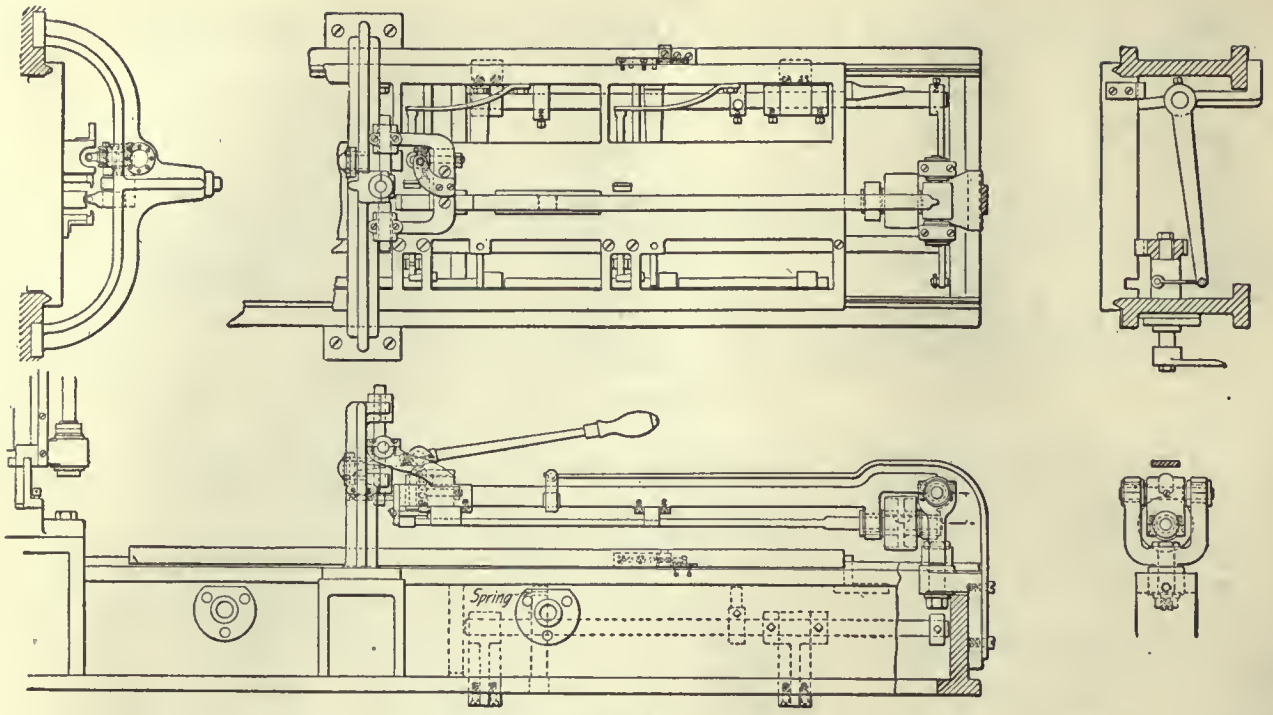

FIG. 1980

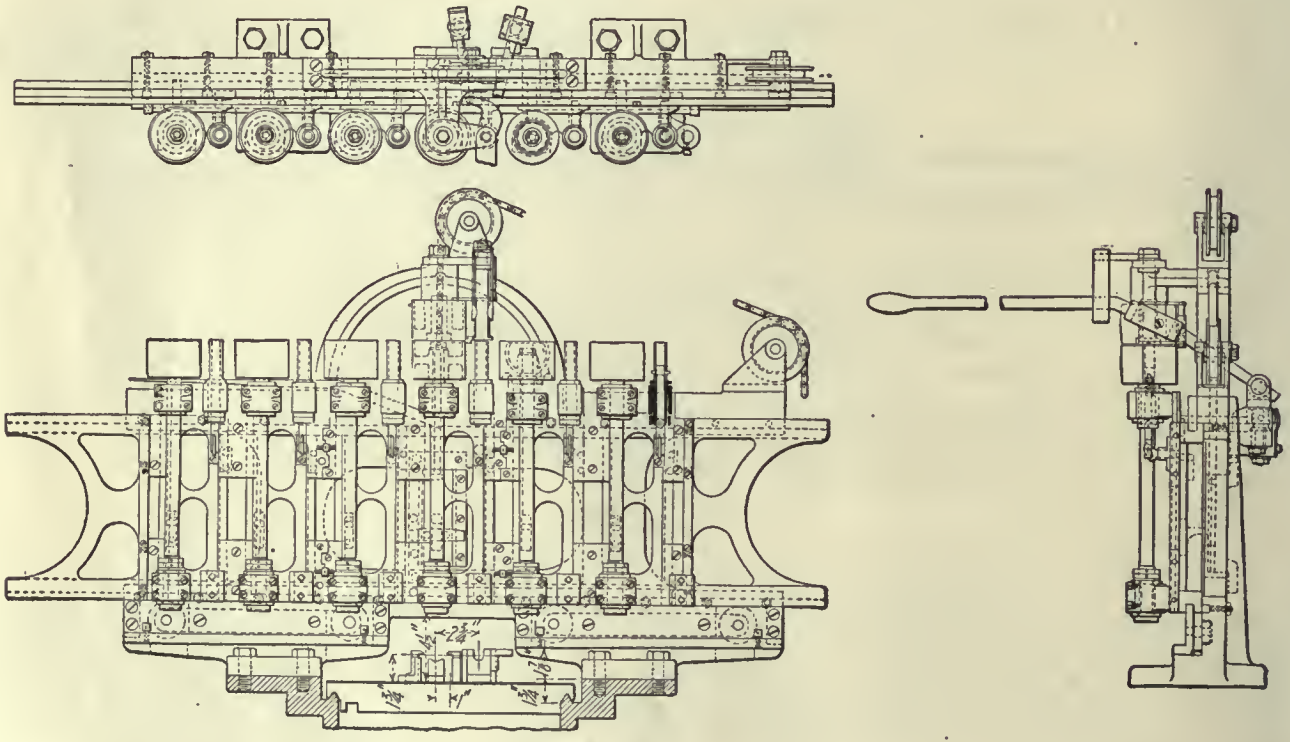

FIG. 1981 OP. 7

are fed in from opposite directions by means of a foot treadle. As the treadle is released, the heads recede; and as the lever is raised to release the work, the machine is stopped. One head carries two wood bits, which feed in about 0.3 in.; the other head carries a triangular-point center drill, which goes in just far enough to make a good center. The size and position of the driver-plate holes are gaged with the gages shown in Fig. 1956.

A templet is laid on the stock and, with the top and ends used to locate from, the lower outline and top of the butt are marked with a pencil and then sawed out with a band saw, Fig. 1958. The templet is illustrated in Fig. 1959.

The "cornering" is the planing off of the left-hand top edge and is done so that the wood will have less tendency to splinter in the following turning operation. The first rough-turning consists in removing the surplus wood under where the barrel of the rifle is to be placed. The rough stock is placed in a revolving fixture on the Blanchard type of lathe, Fig. 1936. The top edge rests on a guide bar and the end center over a center pin. A locating center pin carried on a hinged bracket supports the butt. The machine has two revolving cutters, thereby materially reducing the turning time. A master form guides the cutters, and the gage, Fig. 1963, is used.

A metal driver plate is next pressed into the butt end, using the foot press shown in Figs. 1965 and 1965-A. Then the stock is placed in the lathe, Fig. 1937, and the rest of it is roughed off. The part first turned is wedged into a revolving sleeve to hold it, and the pressed-in driver plate is held in a driving center. One front-end and two

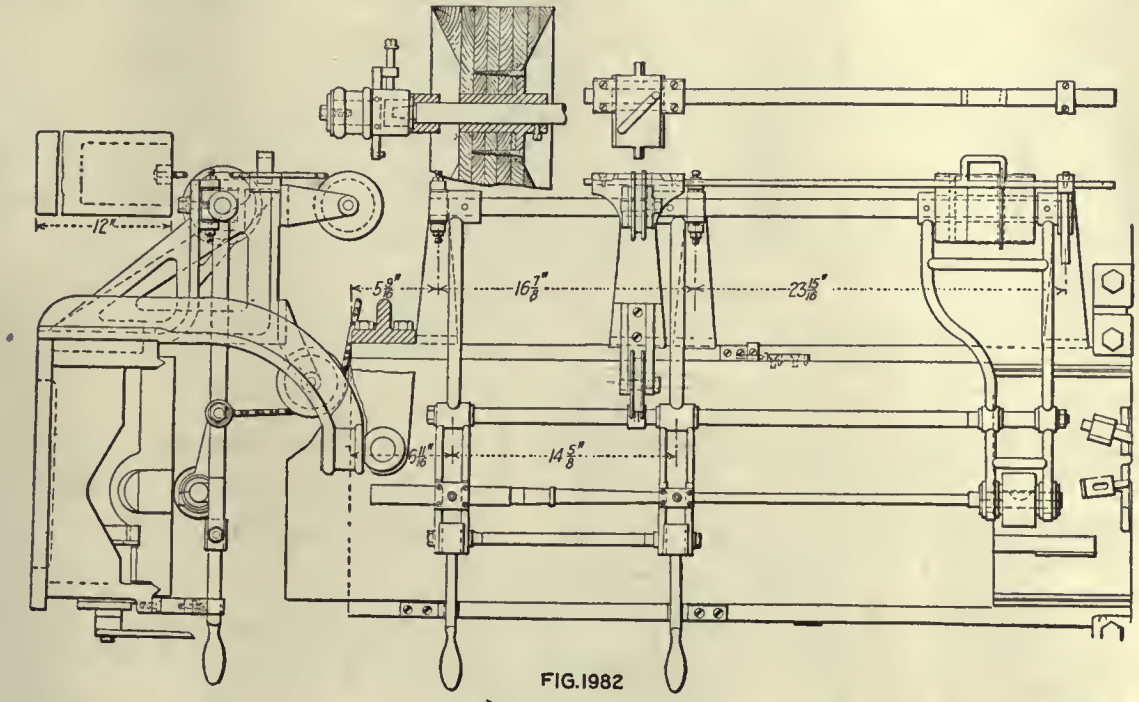

FIG. 1982

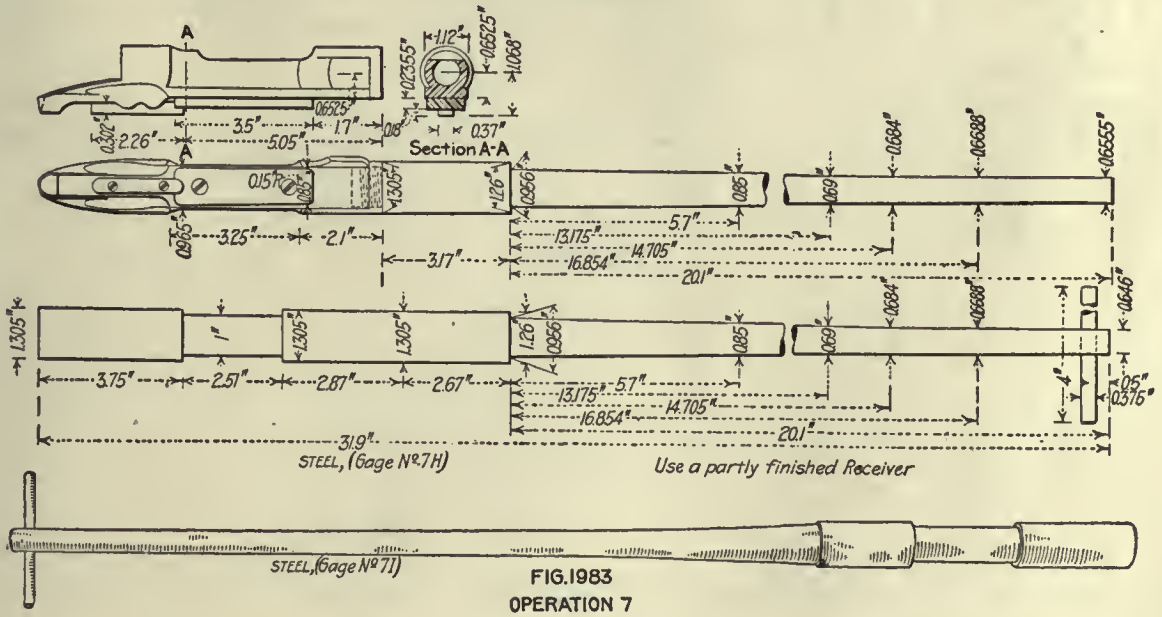

FIG. 1983
OPERATION 7

butt-end turning lathes are worked together, as the first one will turn twice as many pieces as the others. For the second rough-turn, the gage, Fig. 1967, is used.

Straightening is done on a buzz planer and is to smooth up any roughness or slight warp developed in the previous operations. A smooth surface results, to be used in conjunction with the ends for locating in the spotting machine.

This spotting machine is shown in Figs. 1938 and 1970. The stock is placed in a vertical sliding carrier, detailed in Fig. 1971, and is clamped in by means of an eccentrically operated spring clamp. The operator presses down on the foot treadle, and the work is carried downward between the cutting heads. The cutting tools used are illustrated in Fig. 1972. Originally, the cutter heads were made in the form of a sort of large end mill, and the shafts were run at right angles to the work; but the present form uses regular cutter heads running parallel to the work. The thickness of the wood through the different working spots is tested by the gage shown in Fig. 1973.

The most complicated operation, or rather series of operations, done on a stock is the bedding for the barrel. The stock is locked in the carriage of the machine shown in Fig. 1939. The channel of the bed is first roughed out as close to the finished size as practical without danger of undercutting. The various parallel cuts are then made, using the different vertical cutters in turn, each being guided by a master form set close to the work. The remaining surplus stock is worked out by running the carriage to the right out under the single horizontal cutter or mill rod, which is worked from side to side and up and

down in the bed channel by the hand lever at the right, the carriage being run back and forth by means of the cranks shown hanging down from the front of the bed. Next, the carriage is run through under the vertical spindle head to the opposite end of the machine, Fig. 1940. Here the revolving heading rod is pressed down into the bed by means of the two handles, finishing the cylindrical surfaces and shoulders.

The transformation, Fig. 1974, will give a good idea of the various steps, and the tools used are illustrated in Figs. 1976 and 1977. The carriage details, forms, rods and the like, may be seen in Figs. 1978 to 1982, and the gages in Fig. 1983.

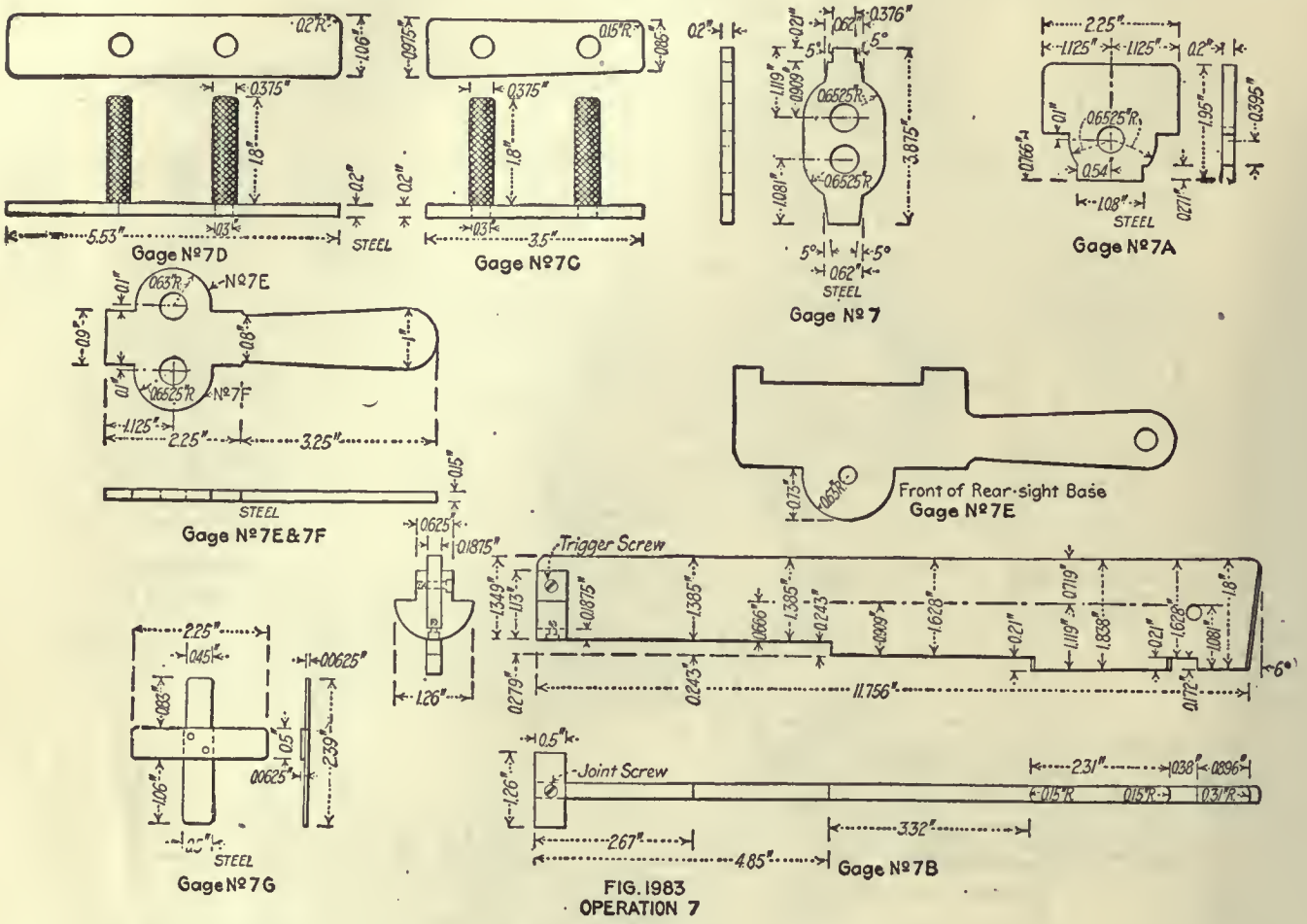

FIG. 1983
OPERATION 7

The rough cut for the receiver is made with the turret-head bedding machine, Fig. 1985, the work holder being shown in detail in Fig. 1986 and the cutting tools in Fig. 1987. These tools are guided by a master form, Fig. 1988. Gages for this operation are shown in Fig. 1989.

The bedding machine used, like many of the others, is a special type of profiling machine, the cutting tools being guided by means of master forms placed at one side of the work. A guide pin, or finger, set parallel with the cutting tool, is made to follow the outline of the master form by means of a hand-lever shown at each tool position. As the finger follows the master form a similar outline is cut in the wood of the rifle stock. The great advantage of the turret type of profiling, or bedding machine as it is called, is that both roughing and finishing cuts may be taken at one setting; holes may be drilled; special cuts taken or both plain and formed cutters used.

The holding fixture used with the bedding machine is very simple and will be easily understood from the drawing, the principal feature being a quick-acting eccentric clamp.

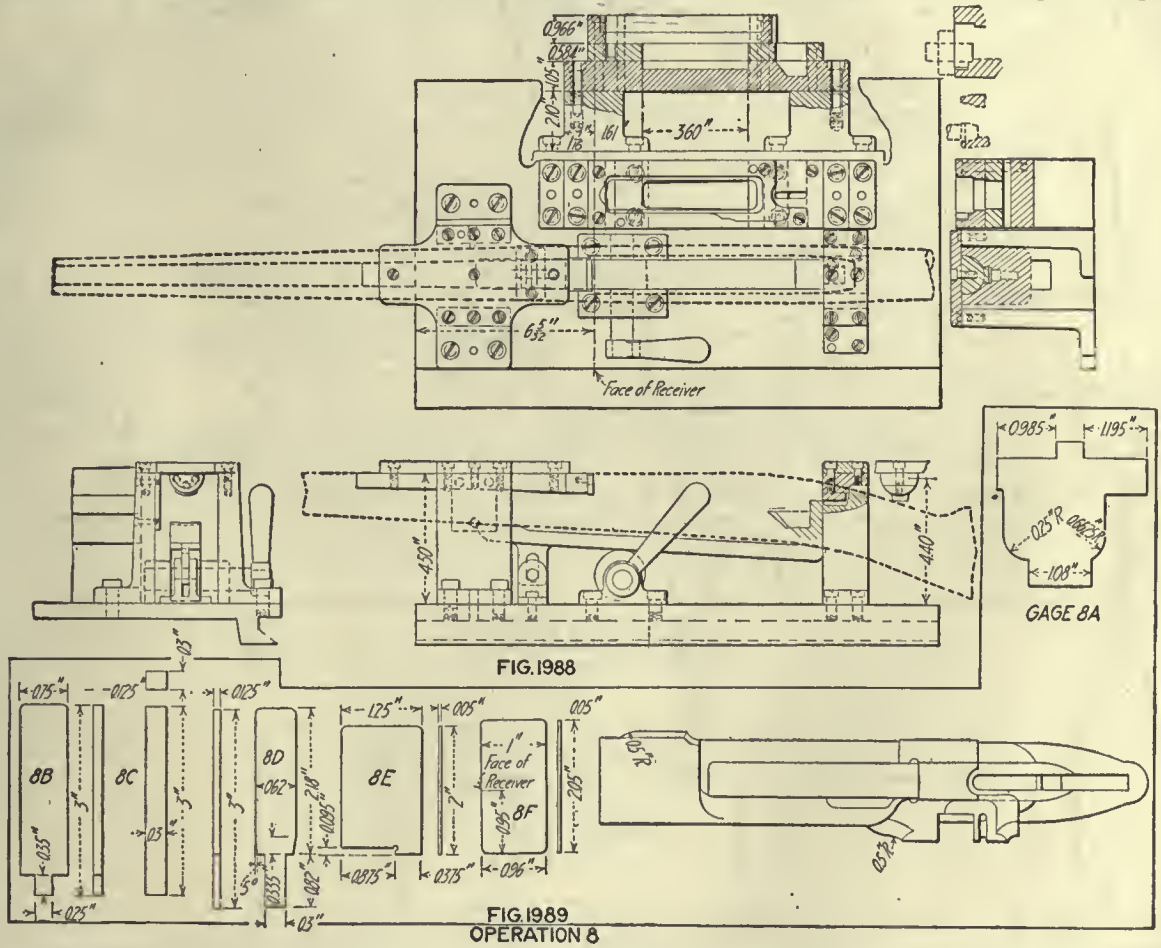

FIG. 1988

FIG. 1989
OPERATION 8

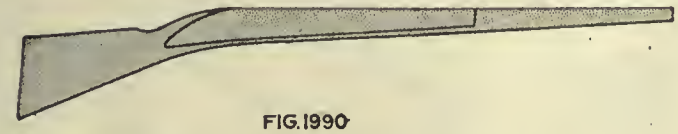

FIG. 1990

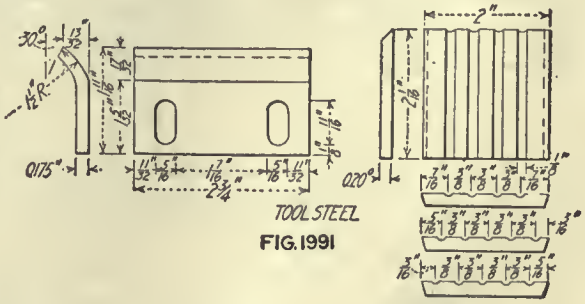

FIG. 1991

Profiling of the sides and the top and bottom of the butt is done in the three-spindle shaping machines, Fig. 1941. Two holding fixtures clamp the work to master forms. The fixture for the side profiling is illustrated at the left, and in detail in Fig. 1992. The one for the top and bottom of the butt is shown at the right on the machine and in detail in Fig. 1993. The gages used are shown in Fig. 1994. The top edge is next finish profiled in the same type of machine, the work holder being illustrated in Fig. 1997.

While the three-spindle wood shaper is used for this work only one spindle is used for the separate jobs. In this case the left hand spindle only is used for profiling or shaping the sides and the right hand one for profiling the top and bottom of the butt. By using a machine of this type the work can be easily shifted from one holding fixture to another with the minimum delay and the proper cutters are always ready.

A combination saw and wood shaper, Fig. 2000, is used for the final trimming to length and shaping of the butt for the plate. The fixture is shown in Fig. 2002.

The multispindle bedding machine, Fig. 1942, is used to cut the top of the butt for the tang of the plate. As in most of these operations, a master form serves to guide the tool. The screw holes for the plate are bored at the same setting by means of a horizontal attachment shown

FIG.1984

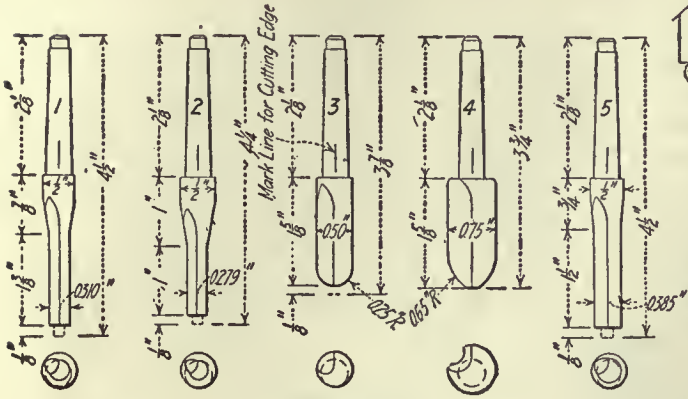

TOOL STEEL
FIG.1987

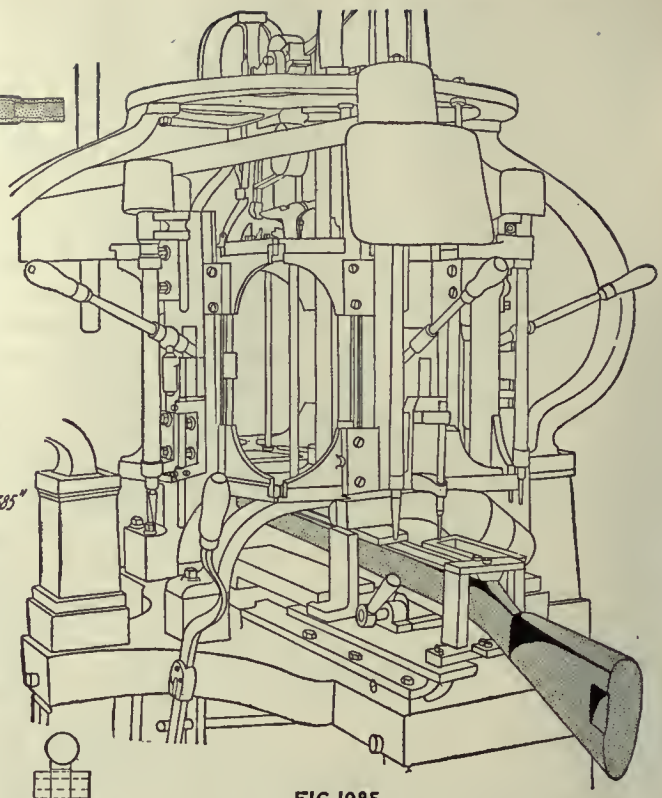

FIG.1985

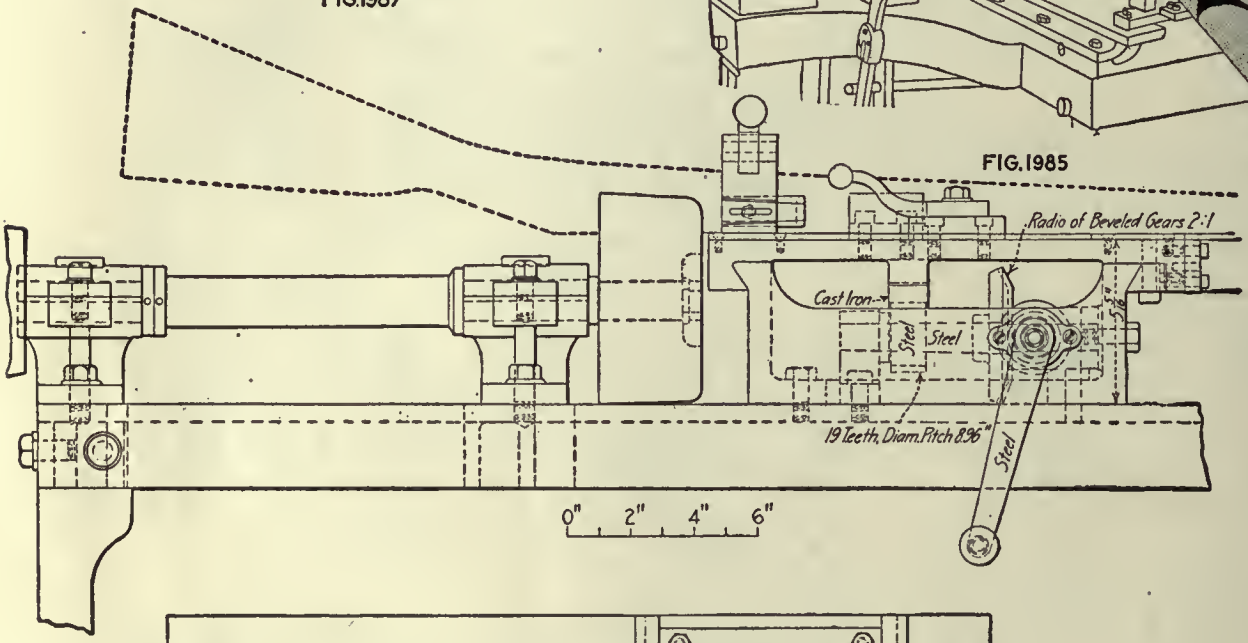

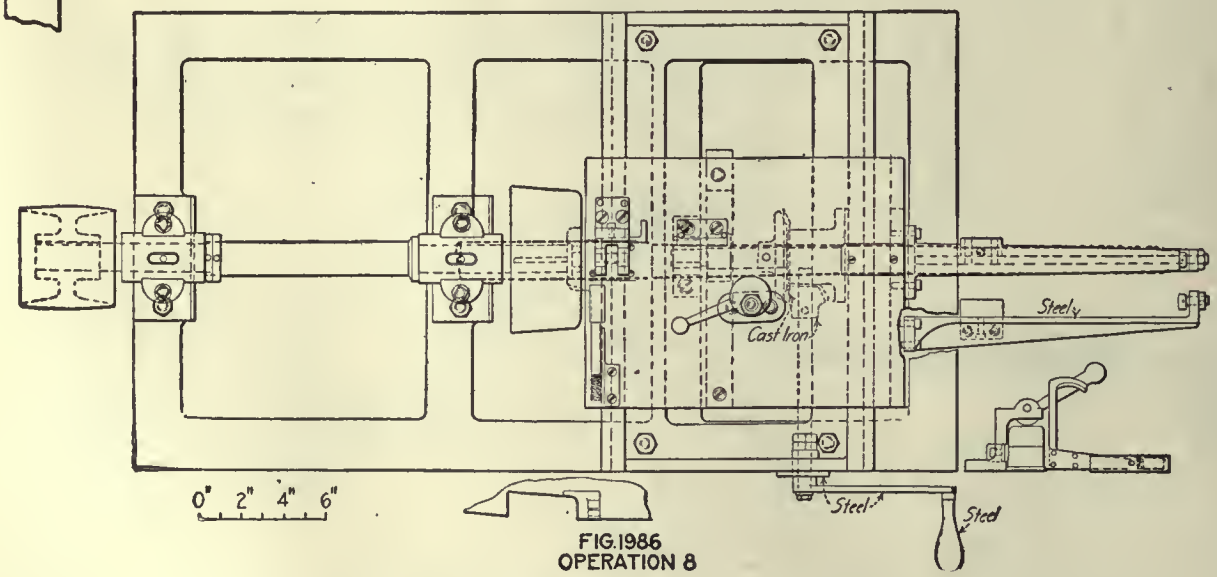

FIG.1986
OPERATION 8

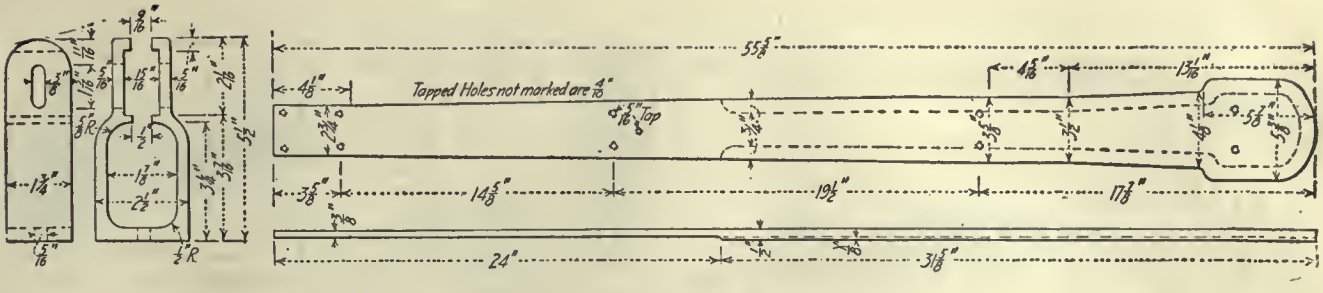

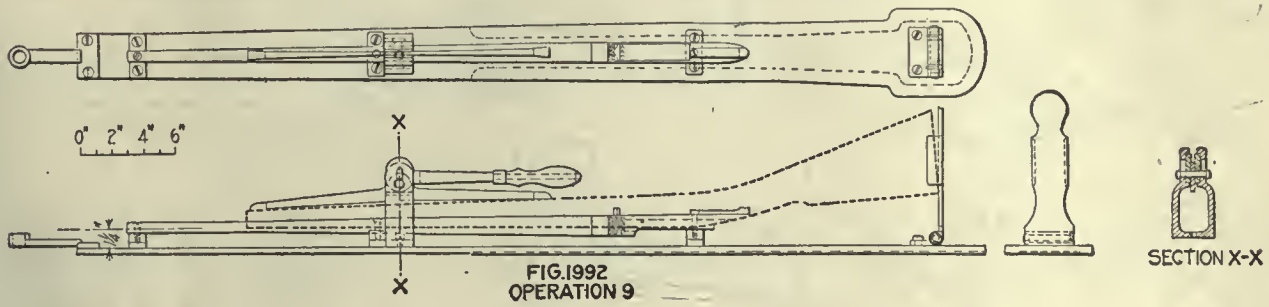

FIG.1992
OPERATION 9

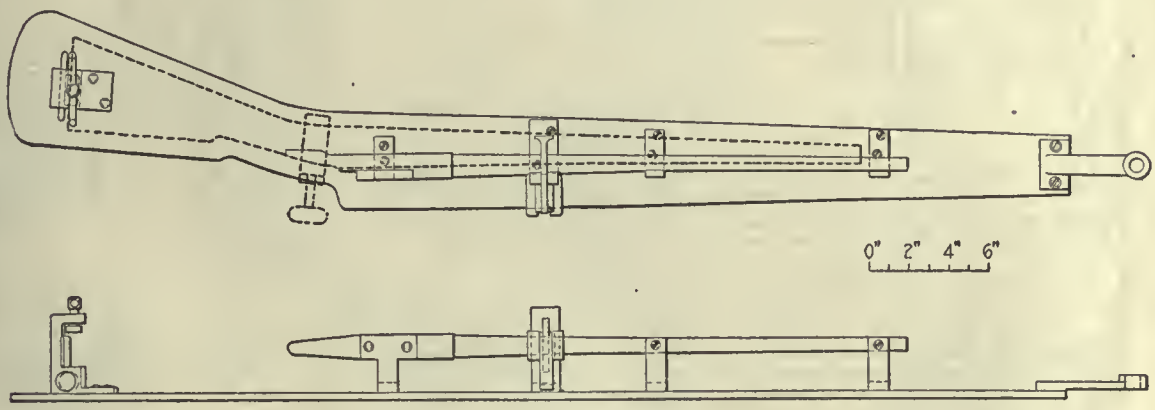

FIG.1993

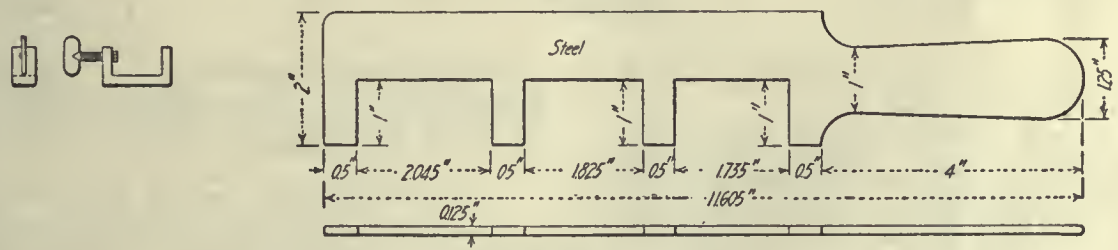

FIG.1994
OPERATION 9

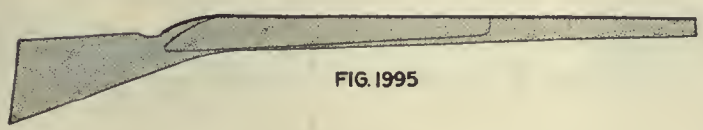

FIG. 1995

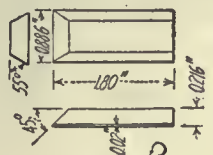

FIG.1996

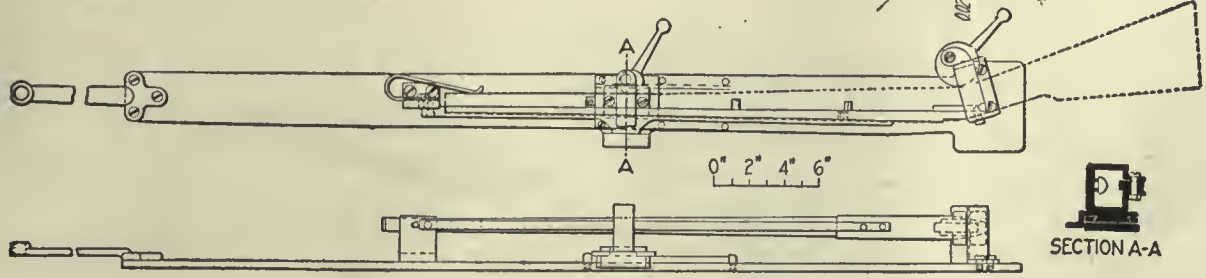

FIG. 1997 OPERATION 10

FIG.1998

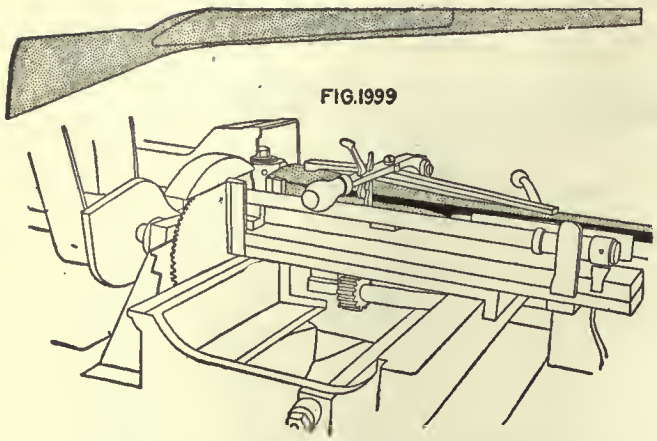

FIG.1999

FIG.2000

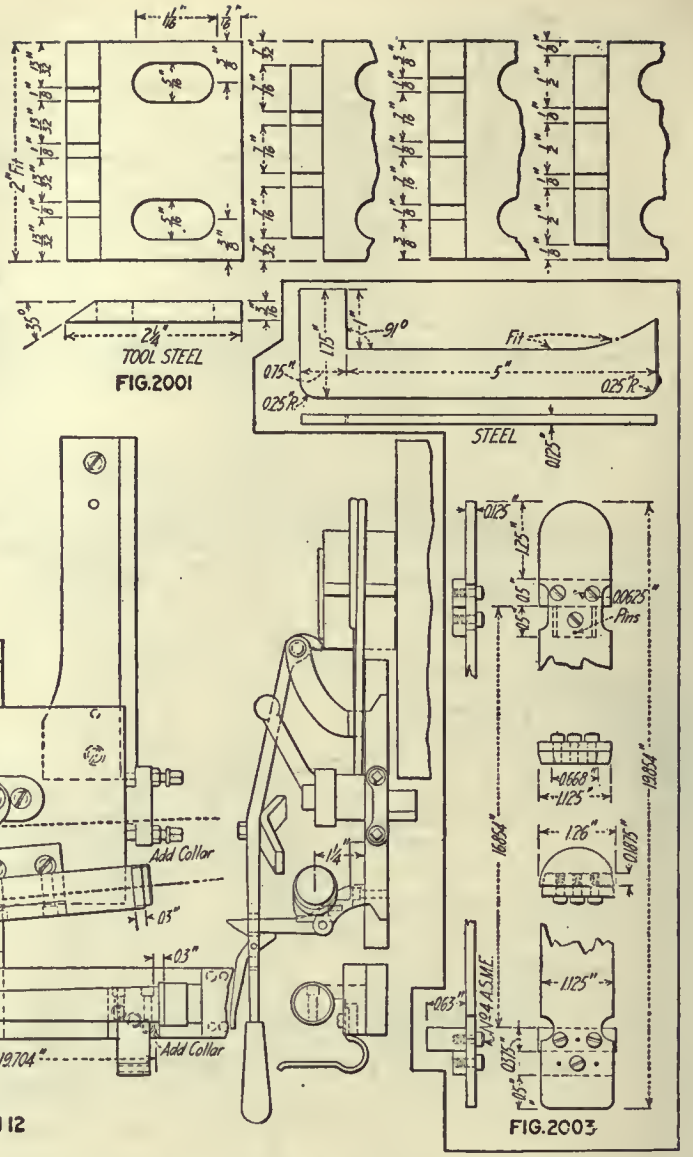

at the right. Details of the work-holding and profile fixture are given in Fig. 2006.

OPERATION 8. ROUGH-CUT FOR RECEIVER

Transformation—Fig. 1984. Machine Used—Turret-head bedding machine, Fig. 1985. Number of Operators per Machine—One. Work-Holding Devices—Fig. 1986. Cutting Tools—Fig. 1987. Cut Data—Spindle, 7000 r.p.m. Average Life of Tool Between Grindings—100 pieces. Special Fixtures—Master form, Fig. 1988. Gages—Fig. 1989. Production—528 per day.

OPERATION 9. PROFILE SIDES, BOTTOM, TOP OF BUTT

Transformation—Fig. 1990. Machine Used—Special shaping machine, Fig. 1941. Number of Operators per Machine—One. Tool-Holding Devices—Standard heads. Cutting Tools—Fig 1991. Cut Data—3800 r.p.m. Average Life of Tool Between Grindings—Stoned every day; ground once a week. Special Fixtures—Side-profiling form and work holder, Fig. 1992 top and bottom profiling form and work holder, Fig. 1993 Gages—Fig. 1994. Production—363 per 8-hr. day.

OPERATION 10. PROFILE TOP EDGE TO FINISH

Transformation—Fig. 1995. Machine Used—Same type machine as for operation 9. Number of Operators per Machine—One. Cutting Tools—Fig. 1996. Special Fixtures—Master form and work holder, Fig. 1997. Gages—Fig. 1998. Production—1144 per 8-hr. day.

FIG.2008

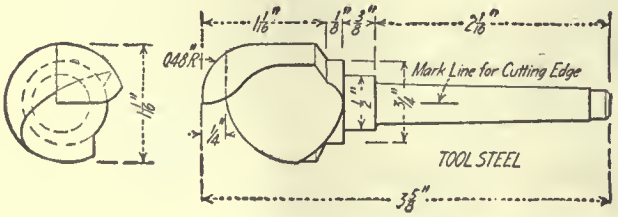

FIG.2010

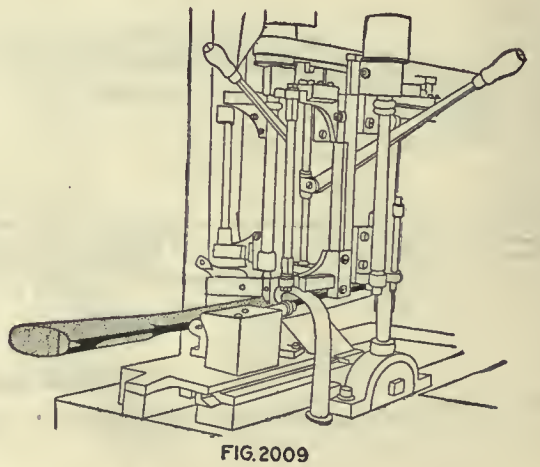

FIG.2009

FIG. 2004

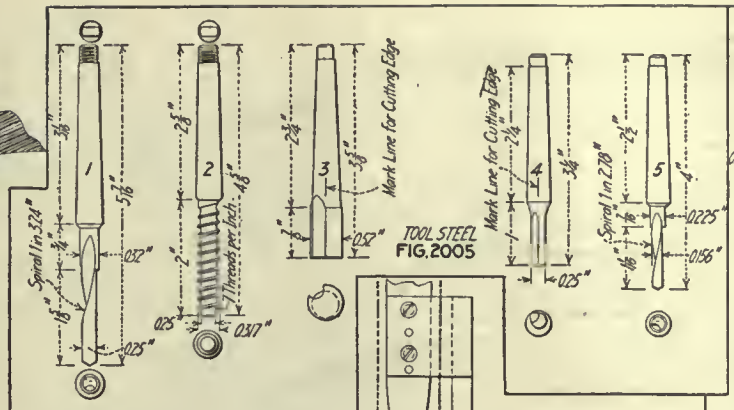

FIG. 2005

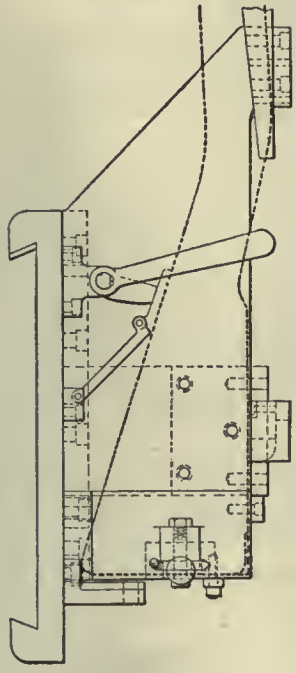

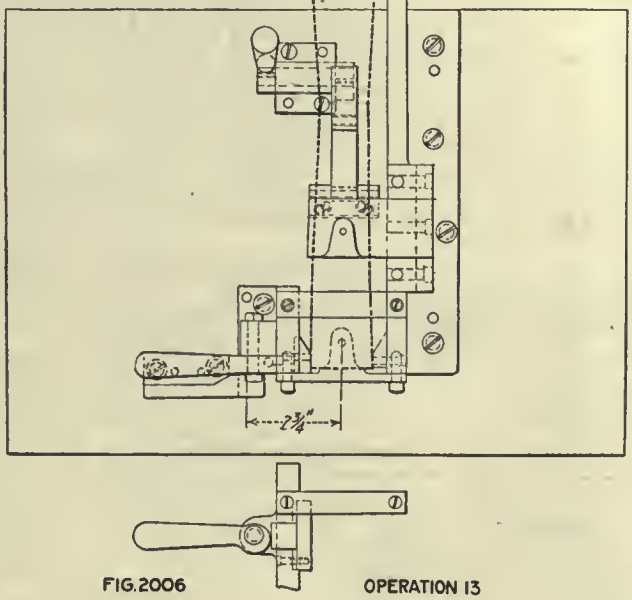

FIG. 2006

OPERATION 13

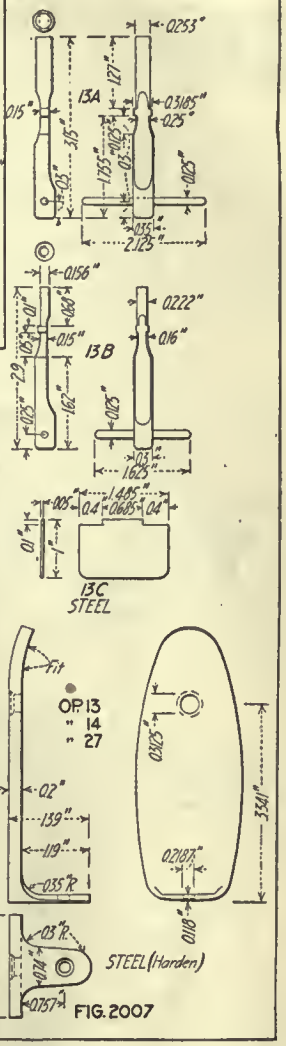

FIG. 2007

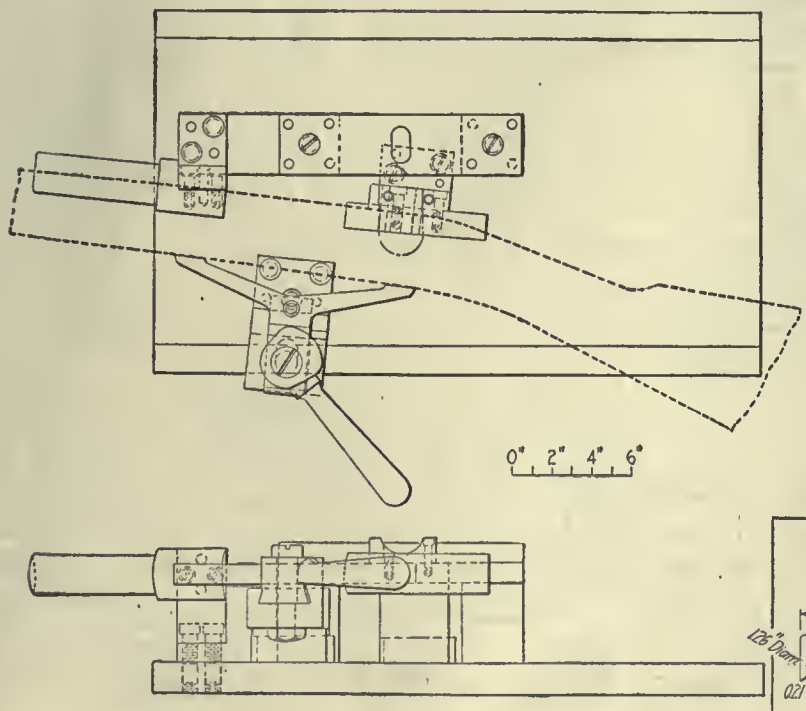

FIG. 2011

OPERATION 11

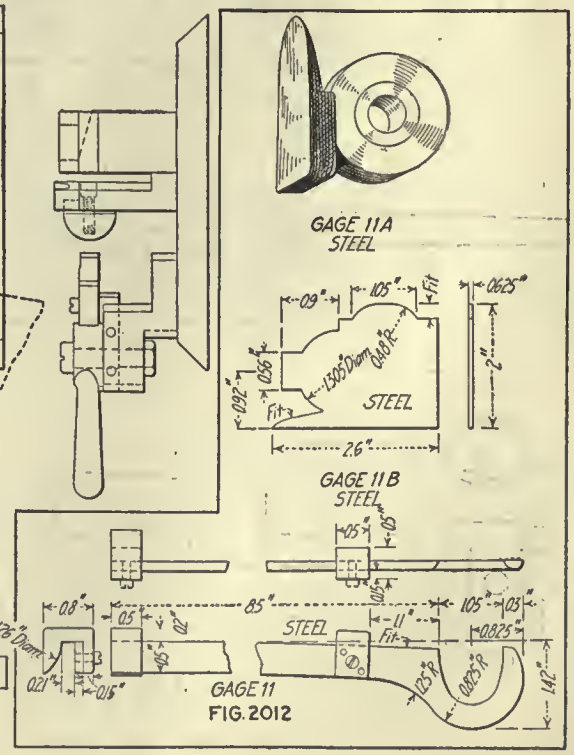

FIG. 2012

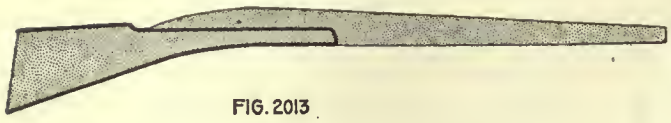

FIG. 2013

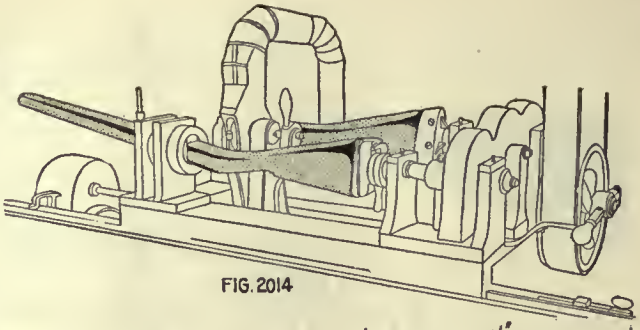

FIG. 2014

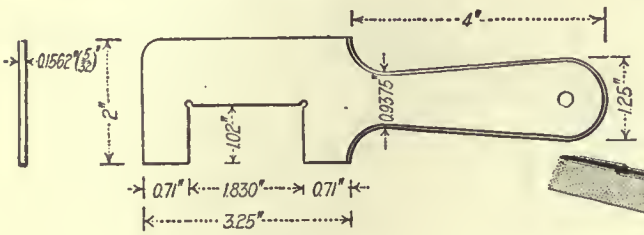

FIG. 2016

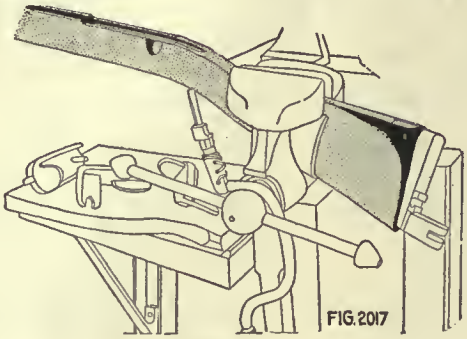

FIG. 2017

OPERATION 14

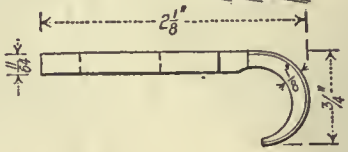

FIG. 2016

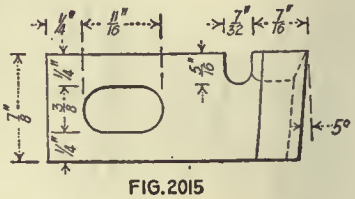

FIG. 2015

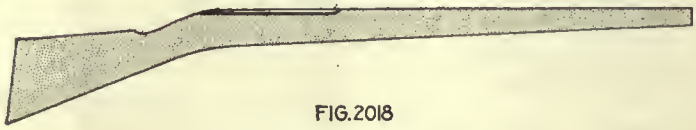

FIG. 2018

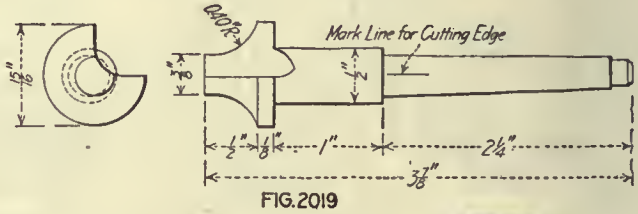

FIG. 2019

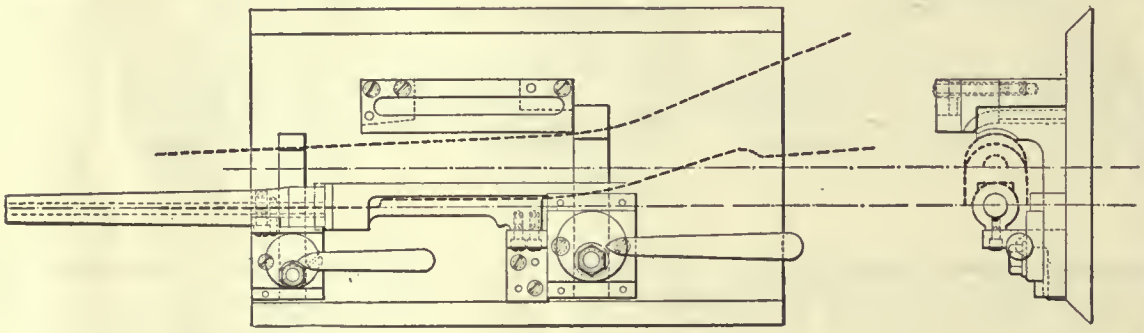

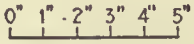

OPERATION 22

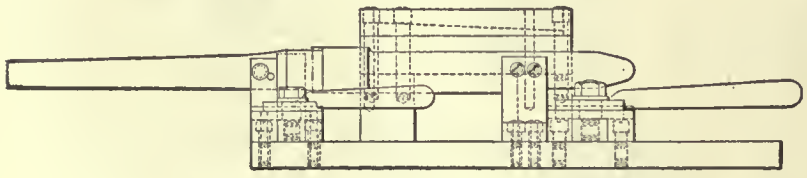

FIG. 2020

FIG. 2021

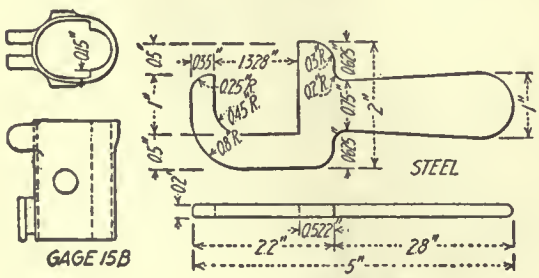

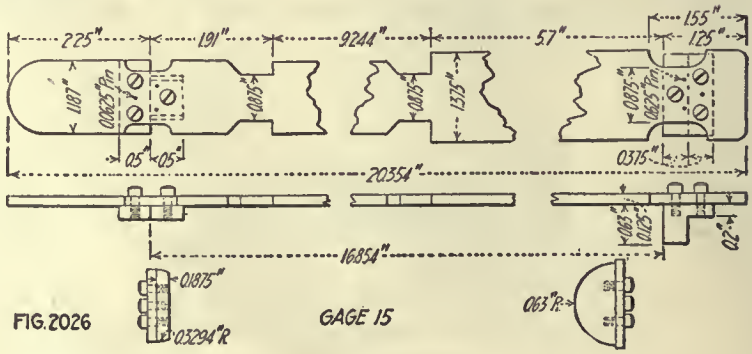

OPERATION 15

OPERATION 12. SHAPE BUTT FOR PLATE AND TRIM TO LENGTH

Transformation—Fig. 1999. Machine Used—Combination saw and wood shaper, Fig. 2000. Number of Operators per Machine—One. Cutting Tools—Fig. 2001, saw, 8¾ in. in diameter, No. 12 gage, ¼-in. pitch. Cut Data—Saw, 3000 r.p.m.; shaper head, 3800 r.p.m. Average Life of Tool Between Grindings—Saw, one week; head, one week, but stoned daily. Special Fixtures—Work-holding and profiling fixtures, Fig. 2002. Gages—Cutting off muzzle end and butt shape, Fig. 2003. Production—1100 per day. Note—Operator trims muzzle end on front fixture with saw, then places stock in rear fixture and shapes butt.

OPERATION 13. CUT TOP OF BUTT FOR TONG OF PLATE AND BORE SCREW HOLES

Transformation—Fig. 2004. Machine Used—Multi-spindle bedding machine, Fig. 1942. Number of Operators per Machine—One. Cutting Tools—Fig. 2005. Cut Data—Spindles run about 4500 r.p.m. Average Life of Tool Between Grindings—200 pieces. Special Fixtures—Work-holding and profile fixture, Fig. 2006. Gages—Fig. 2007. Production—660 per 8-hr. day.

OPERATION 11. CUT FOR CUTOFF THUMB-PIECE

Transformation—Fig. 2008. Machine Used—Special turret bedding machine, Fig. 2009. Number of Operators per Machine—One. Cutting Tools—Fig. 2010. Cut Data—Spindle runs about 5000 r.p.m. Average Life of Tool Between Grindings—500 pieces. Special Fixtures—Fig. 2011. Gages—Fig. 2012. Production—1716 per 8 hr.

OPERATION 14. TURN BUTT AND STOCK UNDER RECEIVER FOR FINISH

Transformation—Fig. 2013. Machine Used—Blanchard type lathe, Fig. 2014. Number of Machines per Operator—Three. Tool-Holding Devices—Regular cutter head. Cutting Tools—Fig. 2015. Cut Data—Cutter runs about 5500 r.p.m.; work about 50 r.p.m. Average Life of Tool Between Grindings—Stone every day, grind 700 pieces. Gages—Fig. 2016. Production—300 per 8-hr. day. Note—Before placing in the lathe a driver plate is screwed on, as shown in Fig. 2017.

OPERATION 22. CUTTING RIGHT TOP OF EDGE AT RECEIVER OPENING

Transformation—Fig. 2018. Machine Used—Wood shaper. Number of Operators per Machine—One. Cutting Tools—Fig. 2019. Cut Data—Spindle runs about 4500 r.p.m. Average Life of Tool Between Grindings—Stoned once a day. Special Fixtures—Fig. 2020. Gages—Figs. 2021 and 1989. Production—1061 per 8 hr.

OPERATION 15. FINISH-TURN FOR BANDS

Transformation—Fig. 2022. Machine Used—Modified Blanchard, Figs. 2023 and 2024. Number of Operators per Machine—One. Cutting Tools—Fig. 2025. Number of Cuts—Three at once. Cut Data—4000 r.p.m. Average Life of Tool Between Grindings—Stoned once a day, ground once a week. Gages—Fig. 2026. Production—670 per day. Note—Operator feeds work by hand, according to grain of wood.

The machine illustrated in Fig. 2009 is similar in many ways to others shown. On it the cut for the cutoff thumb-piece is made, using the tool shown in Fig. 2010 and the fixture in Fig. 2011.

The butt and stock under the receiver are next finish turned in the lathe, Fig. 2014, and then the right top edge at the receiver opening is shaped off, using the holding fixture seen in Fig. 2020.

In finish turning for the bands only a narrow strip is turned in the three places where the bands are to be placed. A modified type of Blanchard lathe, Figs. 2023 and 2024, is used, the three cuts being made at once. The work is revolved by hand, the speed of the feeding depending upon the hardness and the grain of the wood.

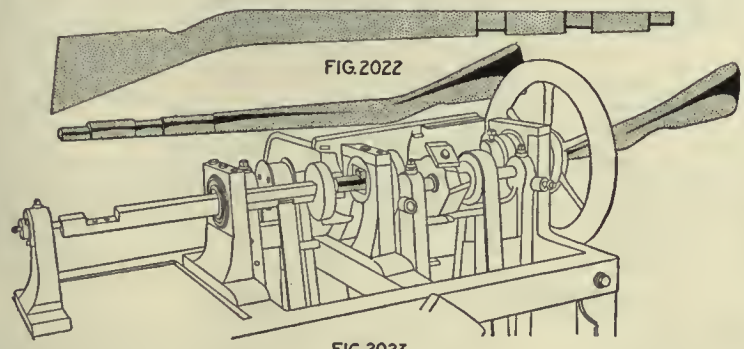

FIG. 2023

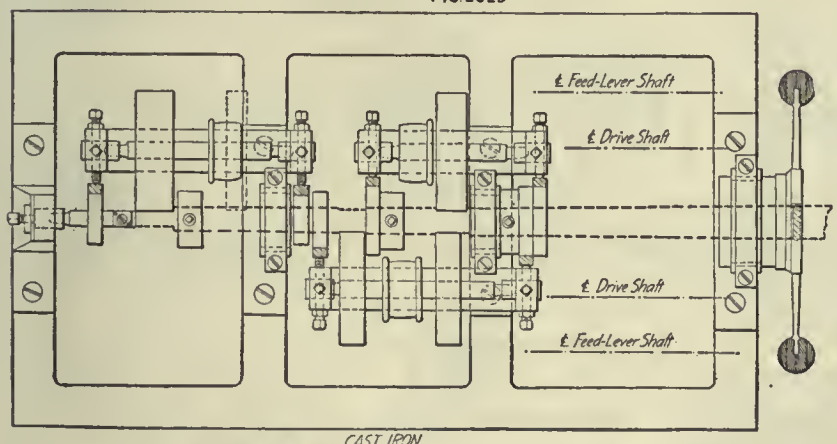

FIG. 2024
OPERATION 15

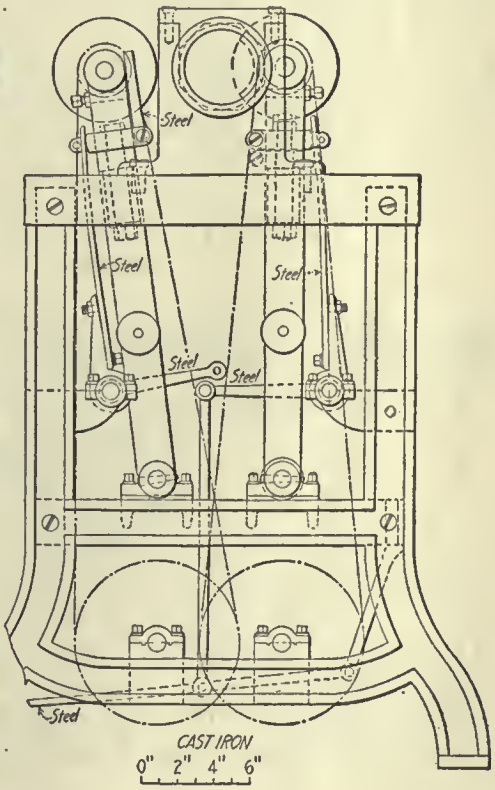

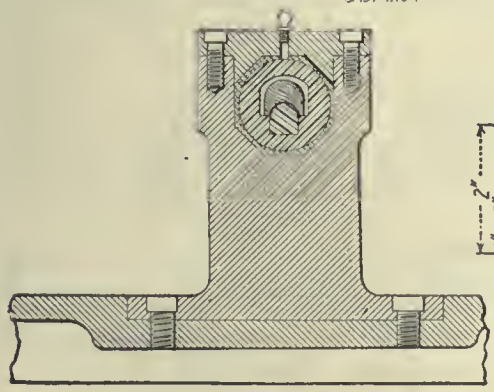

FIG. 2024

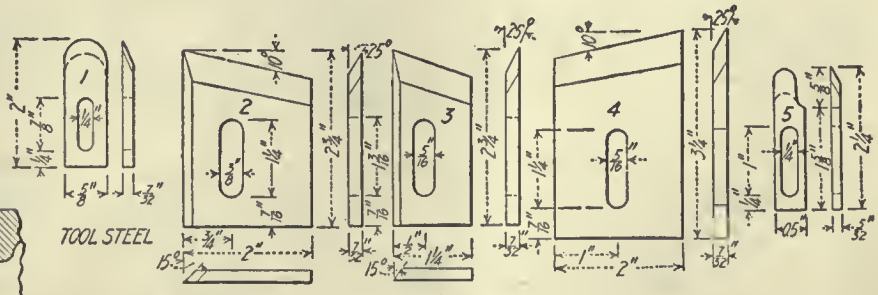

FIG. 2025

The modified Blanchard type of lathe referred to for finish cutting for the bands is fitted with cams for guiding the inserted tooth circular cutters instead of the continuous master form of the stock turning machine.

The work is thrust in through, and is carried by, special bearings, into which it is wedged or clamped against a formed piece fitting the barrel groove.

The hand wheel by which the work is revolved, is large and affords a firm grip as the operator slowly turns the work with it.

Cutter heads are placed in the machine so that one head works on one side and two on the other. These cutter heads are counterbalanced to draw them away from the work and are set into the cams by means of a foot lever.

Following the finish turning for the bands, the surplus stock between is removed in a similar type of lathe, Fig. 2028. Cutters wide enough for each unturned strip are used, and the work is completed in one revolution, the feeding being done by hand as in the previous operation. No gages are needed, care being used not to turn below the band cuts, to allow for the scraping and sanding.

The hole for the upper-band screw is bored in the machine illustrated in Fig. 2031, the work being held in the fixture shown in Fig. 2032.

This machine is a vertical drilling machine, with two opposed spindles operated by levers which move the drills in toward the work which is held in a special jig. The work is located in the jig by means of the barrel groove which fits over a regular scrap rifle barrel screwed to the jig plate.

Two grasping grooves are cut, one on each side of the stock as shown in Fig. 2035. They are intended

Copyright, 1917, McGraw-Hill Publishing Co., Inc.

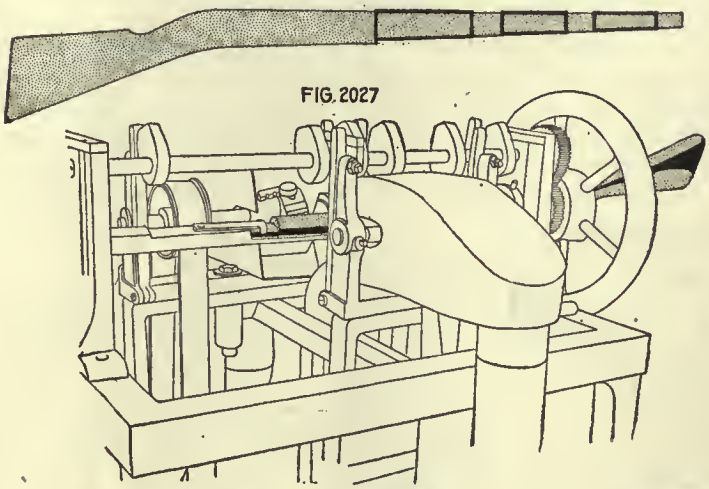

FIG. 2027

FIG. 2028

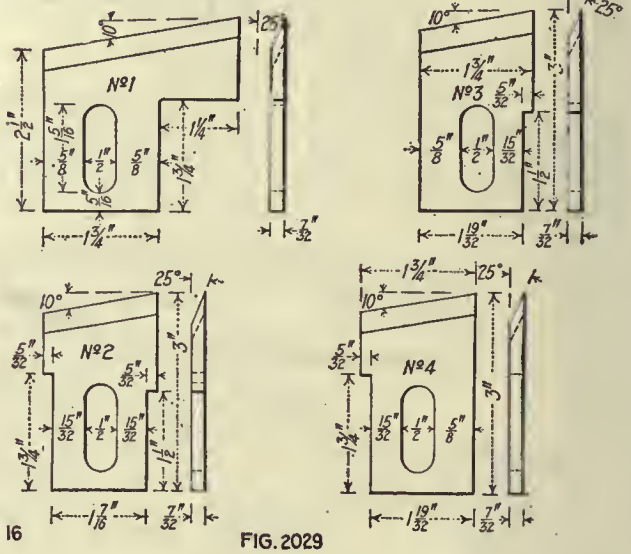

OPERATION 16

FIG. 2029

FIG. 2030

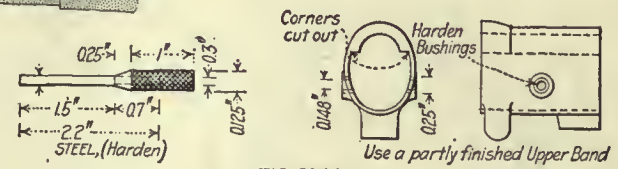

FIG. 2034

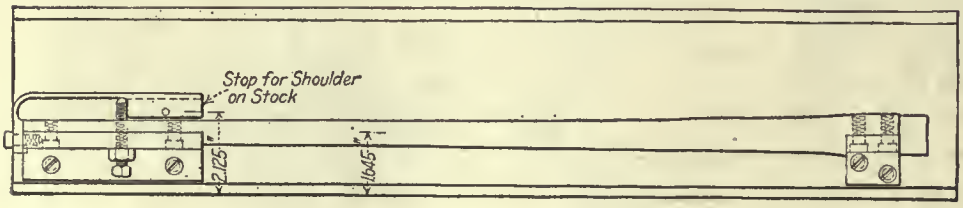

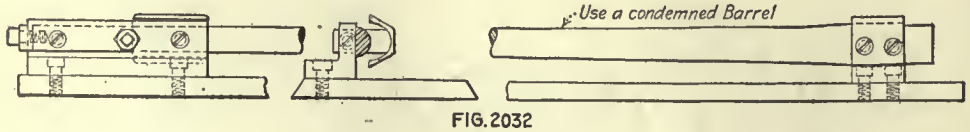

FIG. 2032

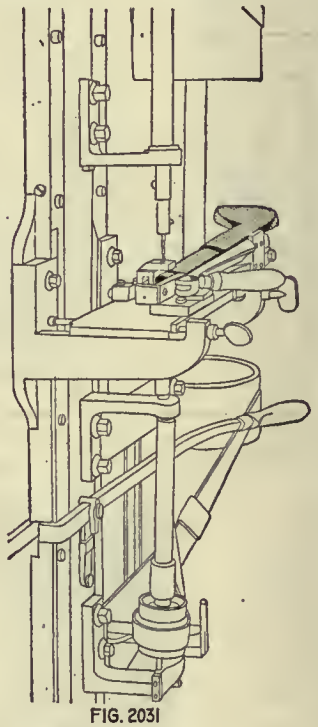

FIG. 2031

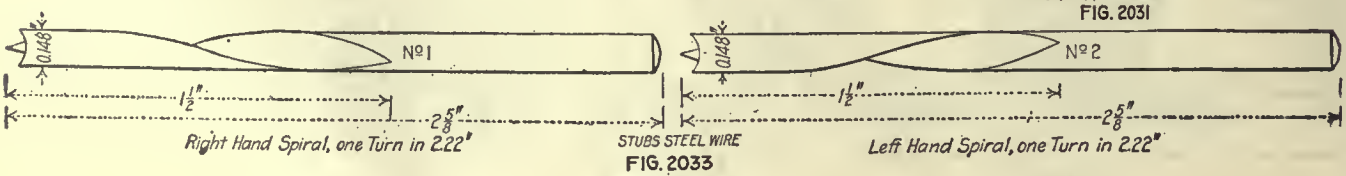

FIG. 2033

OPERATION 20

to give a good grip for the left hand. These grooves are cut in the wood shaper, Fig. 1943, using the work holder and form, Fig. 2036.

The bedding machine, Fig. 2040, is used to cut for the guard, bore guard screw holes and cut the trigger slot. Master forms guide the cutters as in a regular profiling machine. The holding fixture, Fig. 2042, and gages, Fig. 2043, are used.

The hole and slot for the lower-band spring are made in the machine shown in Figs. 2045 and 2045-A. The hole is first bored, then the slot is sawed out. Following this, the hand tool, Fig. 2048, is used to finish the spring seat to exact size and shape. Rounding the edge under the upper band is a hand operation with a spoke shave.

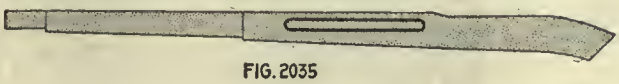

FIG. 2035

FIG. 2038

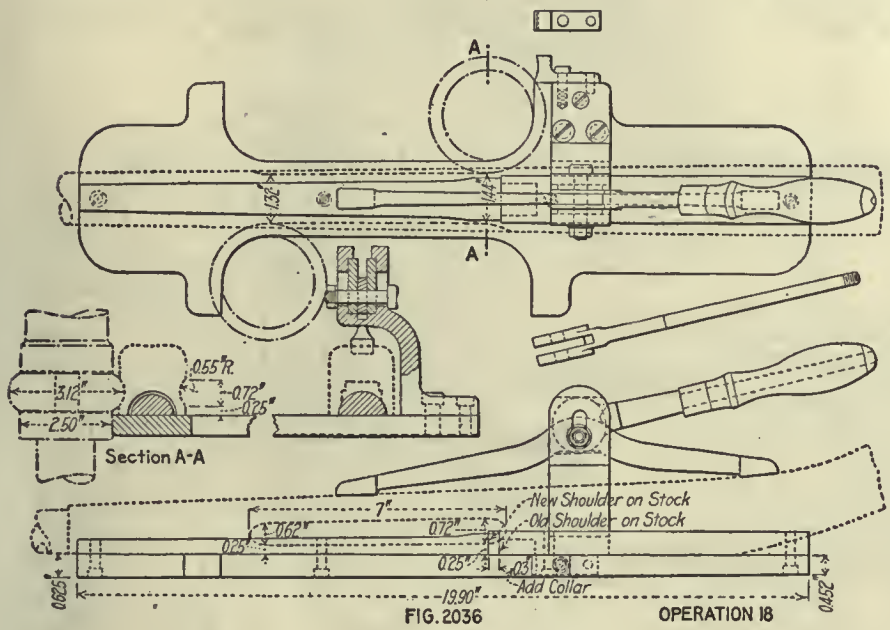

FIG. 2036

OPERATION 18

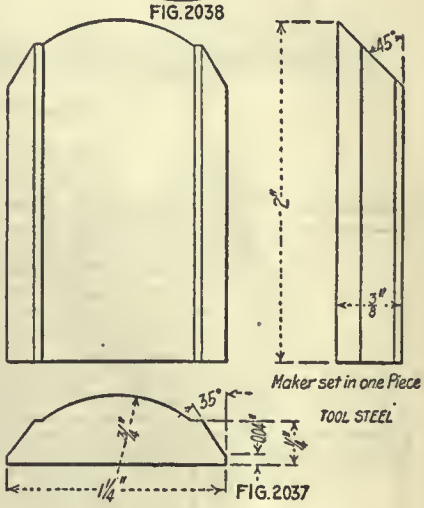

FIG. 2037

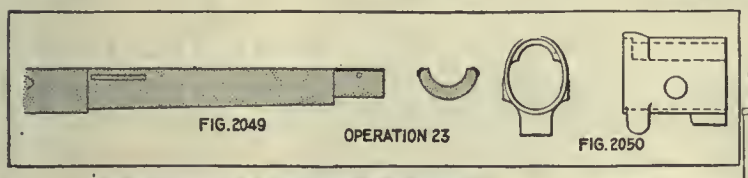

FIG. 2049

OPERATION 23

FIG. 2050

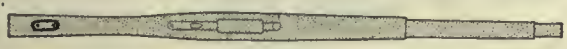

FIG. 2051

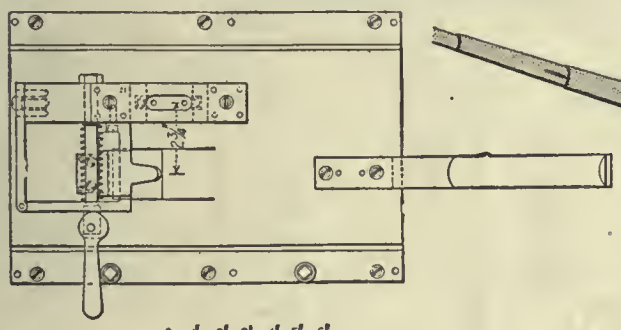

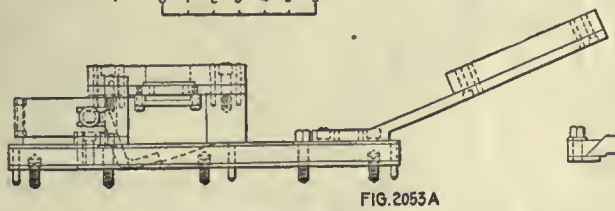

FIG. 2053A

OPERATION 19

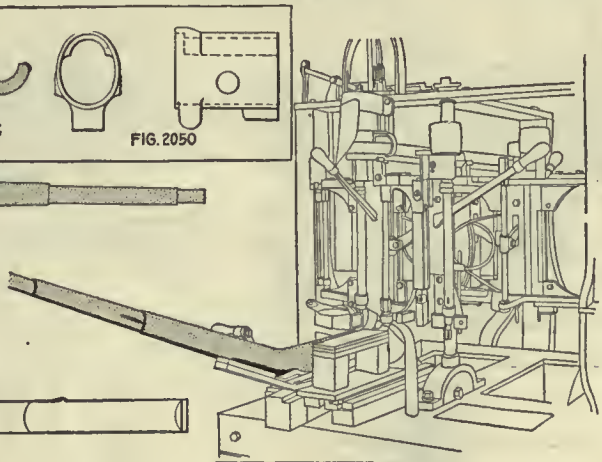

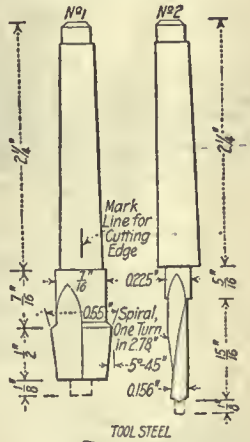

FIG. 2052

FIG. 2053

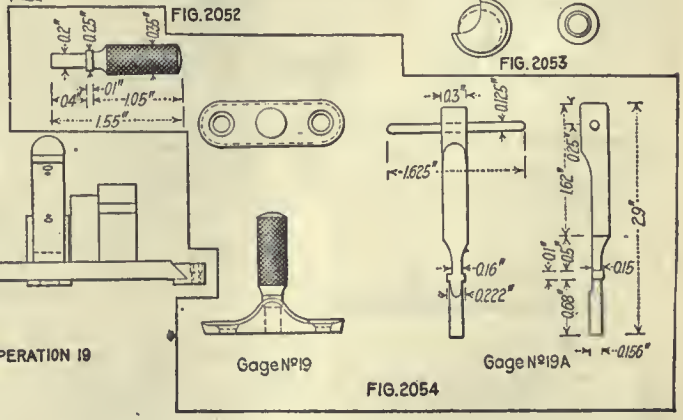

Gage No 19

Gage No 19A

FIG. 2054

OPERATION 16. TURN BETWEEN BANDS

Transformation—Fig. 2027. Machine Used—Modified Bianchard lathe, Fig. 2028. Number of Operators per Machine—One. Cutting Tools—Fig. 2029. Number of Cuts—Three at once. Cut Data—Heads run about 4000 r.p.m. Production—748 per 8-hr. day. Note—Hand feed, according to grain; operator is careful not to turn below band cuts.

OPERATION 20. BORE FOR UPPER BAND SCREW

Transformation—Fig. 2030. Machine Used—Special drilling machine, Fig. 2031. Number of Operators per Machine—One. Work-Holding Devices—Fig. 2032. Cutting Tools—Fig. 2033. Cut Data—4000 r.p.m. Gages—Fig. 2034. Production—2200 per 8 hr.

OPERATION 18. CUT GRASPING GROOVE

Transformation—Fig. 2035. Machine Used—Wood shaper, Fig. 1943. Number of Operators per Machine—One. Work-Holding Devices—Fig. 2036. Cutting Tools—Fig. 2037. Cut Data—Spindle runs 5000 r.p.m. Gages—Fig. 2038. Production—1210 per 8 hr.

OPERATION 17. CUT FOR GUARD, BORE GUARD SCREW HOLES AND TRIGGER SLOT

Transformation—Fig. 2039. Machine Used—Bedding machine, Fig. 2040. Number of Operators per Machine—One. Tool-Holding Devices—Five-tool turret. Cutting Tools—Fig. 2041. Cut Data—Spindle runs 7000 r.p.m. Special Fixtures—Fig. 2042. Gages—Fig. 2043. Production—517 per 8-hr. day.

OPERATION 21. CUT FOR LOWER BAND SPRING

Transformation—Fig. 2044. Machine Used—Special machine, Figs. 2045 and 2045-A. Number of Operators per Machine—One. Cutting Tools—Fig. 2046. Cut Data—Drill and saw run about 5000 r.p.m. Gages—Fig. 2047. Production—1452 per 8 hr. Note—Pin hole is first drilled with vertical spindle, then slot is sawed out, after which the tool in Fig. 2048 is used by hand.

OPERATION 23. ROUND EDGE UNDER UPPER BAND

Transformation—Fig. 2049. Number of Operators—One. Description of Operation—Operator puts stock in padded vise and rounds edges indicated with spoke shave. Gages—Fig. 2050. Production—1210 per 8 hr.

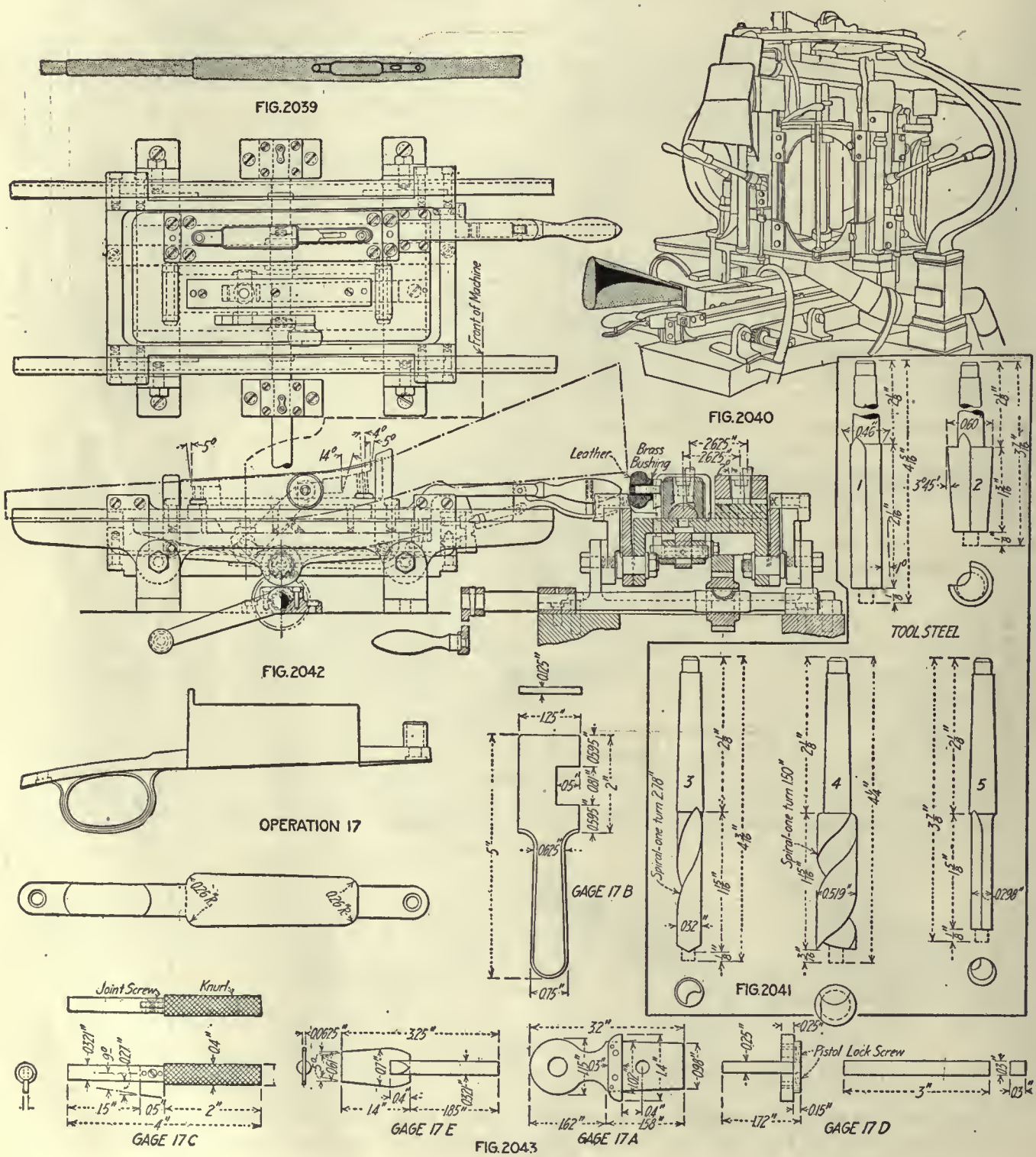

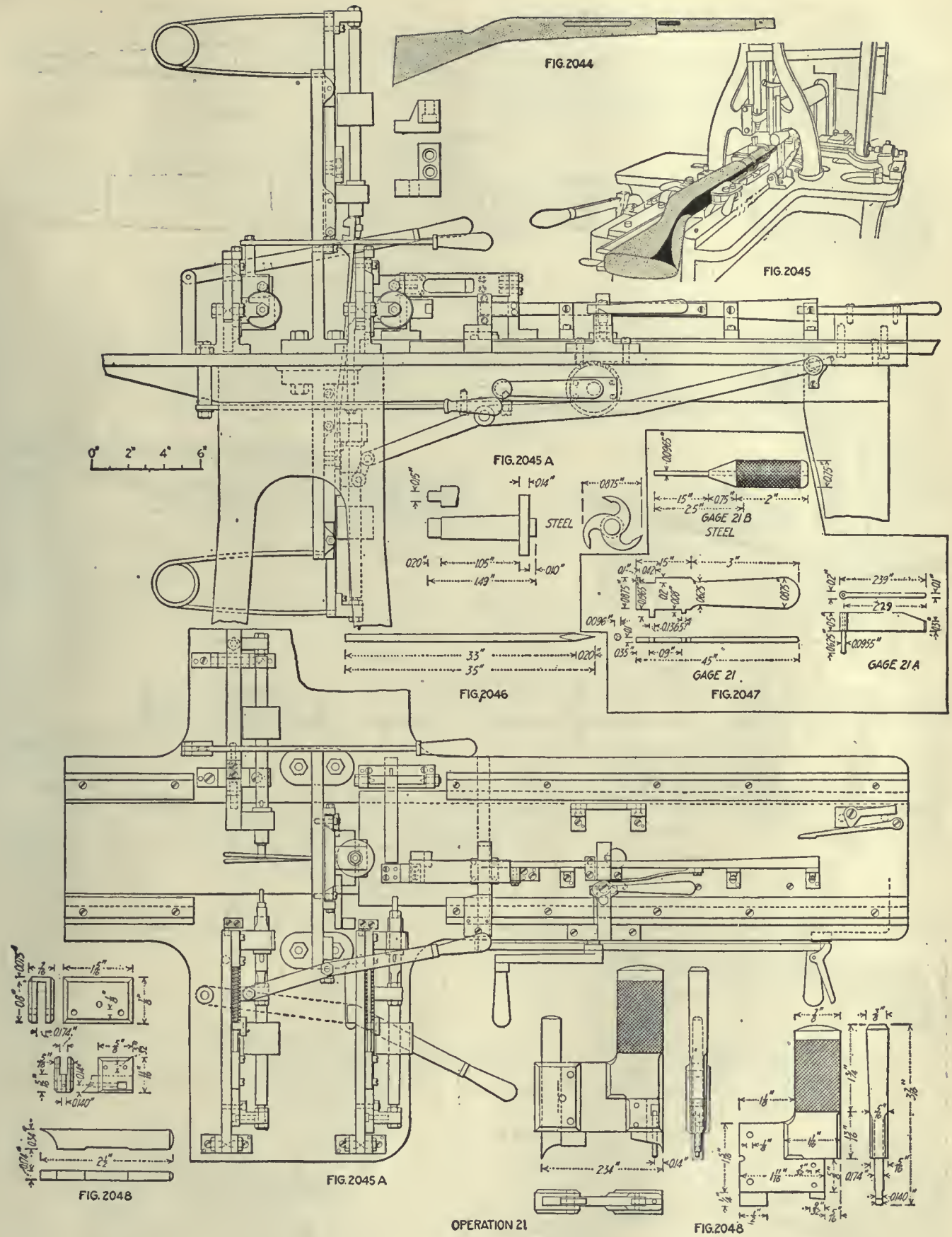

OPERATION 19. CUT FOR SWIVEL PLATE AND BORE SCREW HOLES

Transformation—Fig. 2051. Machine Used—Special bedding machine, Fig. 2052. Number of Operators per Machine—One. Cutting Tools—Fig. 2053. Special Fixtures—Master form and work holder, Fig. 2053-A. Gages—Fig. 2054. Production—1210 per 8 hr.

OPERATION 24. FIT RECEIVER TO PLACE IN END OF STOCK

Transformation—Fig. 2055. Description of Operation—With the stock held in a padded vise, the workman fits in the master form or gage by cutting away the wood where necessary with chisels, gouges or scrapers. Gages—Fig. 2056. Production—280 per 8 hr.

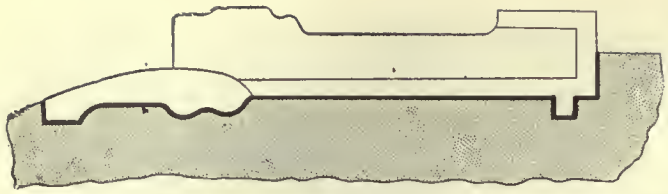

FIG. 2055

FIG. 2056

OPERATION 24

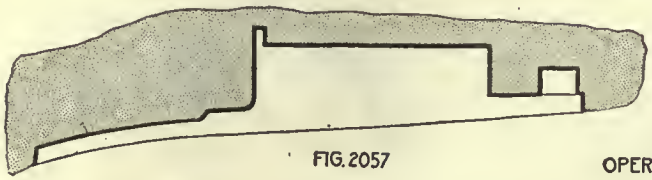

FIG. 2057

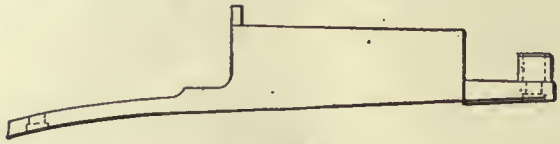

FIG. 2058

OPERATION 25

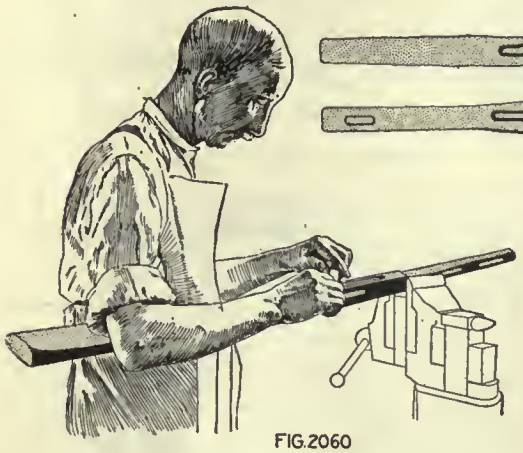

FIG. 2060

FIG. 2059

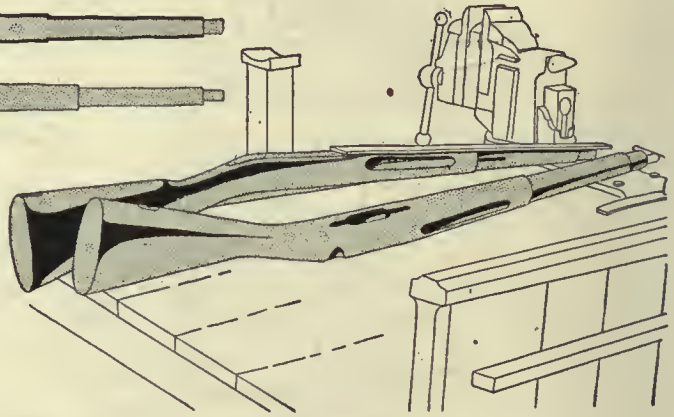

FIG. 2061

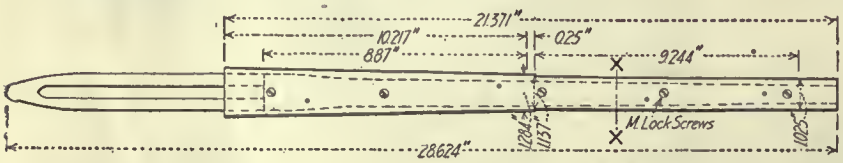

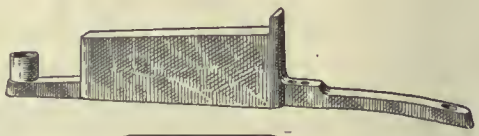

GAGE 26 B

GAGE 26 A

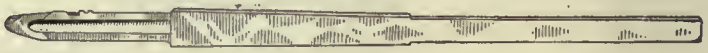

FIG. 2062 . OPERATION 26

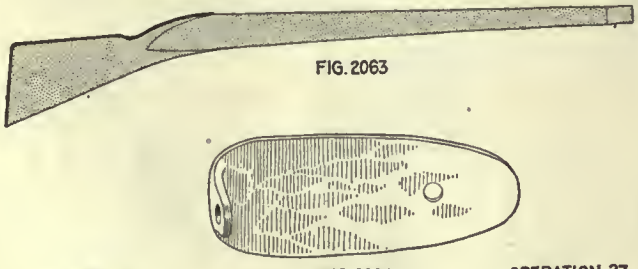

FIG. 2063

FIG. 2065

OPERATION 27

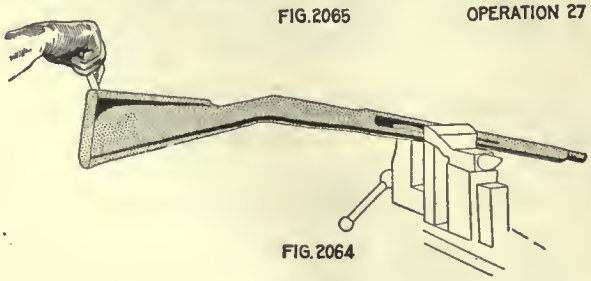

FIG. 2064

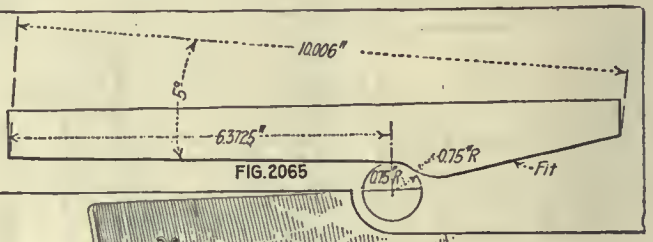

FIG. 2065

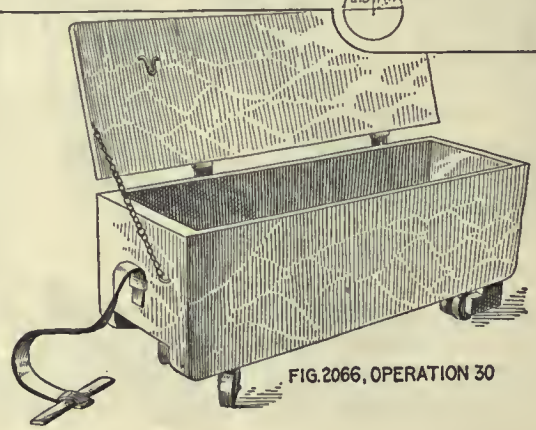

FIG. 2066, OPERATION 30

OPERATION 25. FIT GUARD

Transformation—Fig. 2057. Description of Operation—With stock in padded vise, operator fits in gage and shaves wood level with outside edges. Gages—Fig. 2058. Production—220 per 8 hr.

OPERATION 26. SHAPE TO TANG OF RECEIVER, EDGES OF BARREL GROOVE TO HAND GUARD, AND TO GUARD AND SWIVEL PLATE

Transformation—Fig. 2059. Number of Operators—One. Description of Operation—Operator puts the receiver templet in the barrel groove and the receiver templet in place, then screws the two together and with spoke shave trims wood to templet edges; he also shaves to match edges of swivel plate; these shaved edges serve as guides for the subsequent scraping and sanding operations; the method of working is shown in Fig. 2060. Apparatus and Equipment Used—Bench vise with wooden jaws and support for butt, Fig. 2061. Gages—Fig. 2062. Production—137 per 8 hr.

OPERATION 27. SHAPE TO BUTT PLATE AND SAND TO FINISH

Transformation—Fig. 2063. Number of Operators—One. Description of Operation—Operator holds work as shown in Fig. 2064; shaves butt to edges of butt plate and top to form templet, then scrapes and sandpapers all over to finish. Apparatus and Equipment Used—Set of spoke shaves, scrapers and sandpaper Nos. 1, 0, 00 and 000 used, according to grain of wood and finish. Gages—Fig. 2065. Production—22 per 8 hr.

OPERATION 30. OIL (BOILED LINSEED)

Number of Operators—One. Description of Operation—Operator dips stock in boiled linseed oil, lets it drain and then places it in a rack to dry over night. Apparatus and Equipment Used—One tank, 48 in. long, 16 in. wide and 16 in. deep, Fig. 2066. Production—150 per hr.

OPERATION 28. BORING FOR OILER AND THONG CASE AND TO LIGHTEN STOCK

Transformation—Fig. 2067. Machine Used—Special horizontal boring machine, Fig. 2068. Number of Operators per Machine—One. Cutting Tools—Two drills, Fig. 2069; one slotting tool, 0.655 in. in diameter. Average Life of Tool Between Grindings—2500 pieces. Special Fixtures—Fig. 2070. Gages—Fig. 2071. Production—528 per 8 hr., with three changes of tools.

OPERATION 29. FIT LOWER BAND SPRING

Description of Operation—Operator presses band spring into its seat as slotted in operation 21 and sees that it seats and works properly. Production—1540 per day.

FIG. 2067

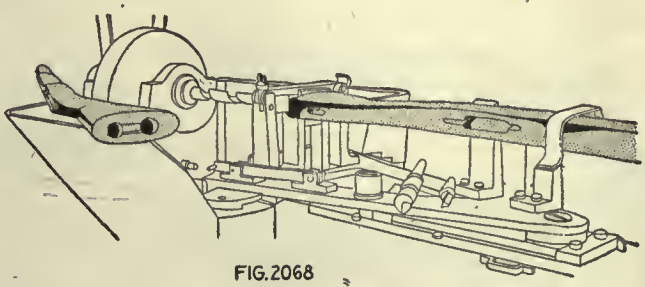

FIG. 2068

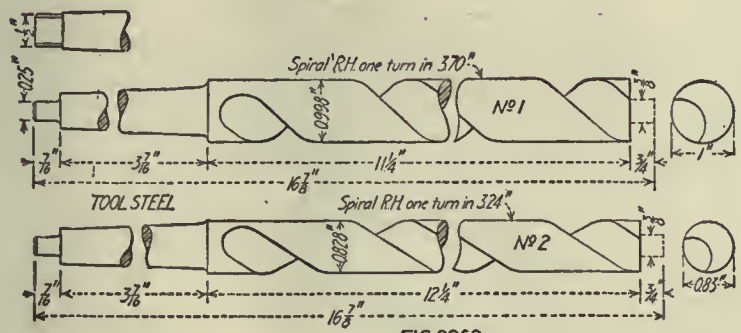

FIG. 2069

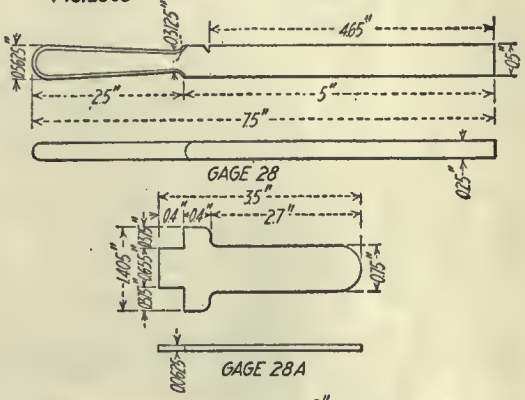

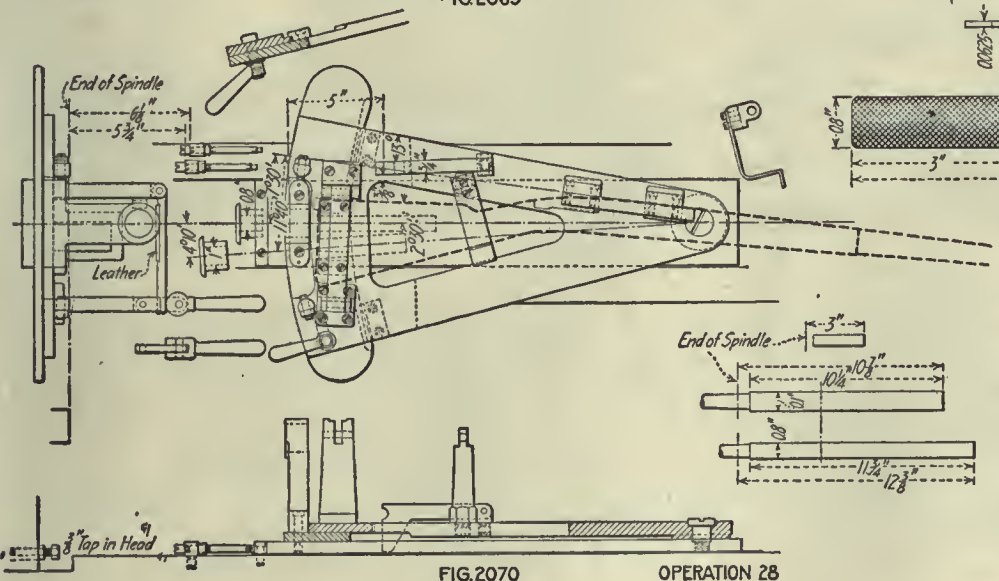

FIG. 2070 OPERATION 28

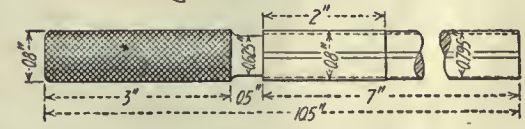

STEEL

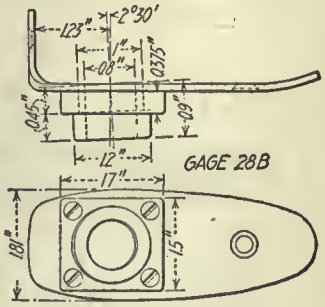

FIG. 2071

OPERATION 32. DRILLING FOR STOCK SCREW

Transformation—Fig. 2072. Machine Used—Two-spindle opposed drilling machine, Fig. 2073. Number of Operators per Machine—One. Cutting Tools—Fig. 2074. Cut Data—Drills run about 3500 r.p.m. Gages—Fig. 2075. Production—1100 per 8 hr.

OPERATION 33. ASSEMBLING WITH STOCK SCREW

Transformation—Fig. 2076. Number of Operators—One. Description of Operation—Operator puts in screw, screws down nut and smooths with file or sandpaper, if necessary. Apparatus and Equipment Used—Forked screwdriver. Production—550 per 8 hr.

OPERATION 34. OIL WITH COSMOLINE

Number of Operators—One. Description of Operation—Operator brushes cosmoline on parts of stock where barrel and metal parts contact. Production—1100 per 8 hr.

OPERATION 35. BORING FOR SPARE-PARTS CONTAINER

Transformation—Fig. 2077. Machine Used—Horizontal drilling machine, Fig. 2078. Number of Operators per Machine—One. Cutting Tools—Drill, 0.33 in. in diameter. Average Life of Tool Between Grindings—500 pieces. Special Fixtures—Grooved plug to guide drill, which is a part of the holding fixture. Gages—Fig. 2079. Production—150 per hr.

The special bedding machine, Fig. 2052, is for making the cut for the swivel plate and boring the screw holes. Fig. 2053-A shows the master form and work holder in detail.

Fitting the receiver is entirely a hand operation, as the workman fits in a master gage or receiver by means of chisels, gages and scrapers. The guard is also fitted in the same way.

The shaping of the tang of the receiver, the edges of the barrel groove to the hand guard and to the guard and swivel plate is done by placing the master forms or templets in position and then cutting away the wood even with the templets by using spoke shaves.

The butt end is next shaped to a master plate in the same way. These shaved edges and surfaces are used as guides for the workman as he scrapes and sandpapers the rest of the stock to a final finish.

The oiling of the stock is effected by dipping it into a tank of boiled linseed oil. It is then drained for a few minutes and next placed in a rack to dry for several hours—usually over night.

Boring for the oiler and thong case is done in a special machine, Fig. 2068. The two holes are drilled, then the web in between the two is partly cut out with a slotting tool to lighten the stock. The lower-band spring is next fitted in by hand, and then the hole for the stock screw is drilled through, after which the screw is put in and smoothed down with file and sandpaper.

All parts where metal contacts with the stock are brushed with cosmoline, then the hole for the spare-parts container is bored. This is done in a horizontal drilling machine, Fig. 2078. The drill used is guided by a grooved plug that fits into a large hole in the butt. The work is tested by a gage, Fig. 2079.

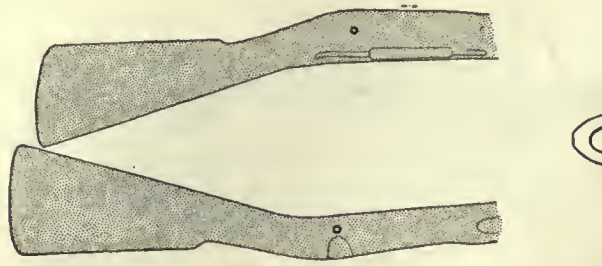

FIG. 2072

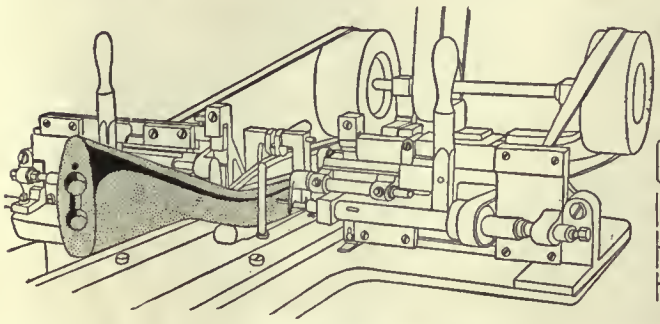

FIG. 2073

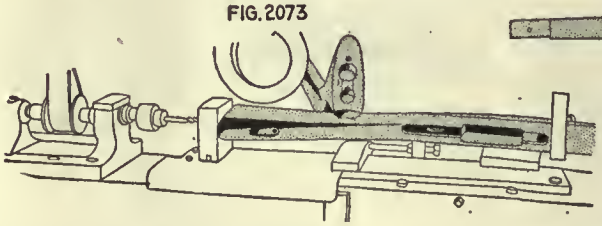

FIG. 2078

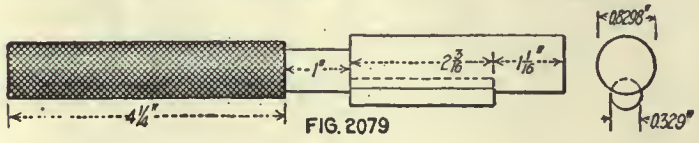

FIG. 2079

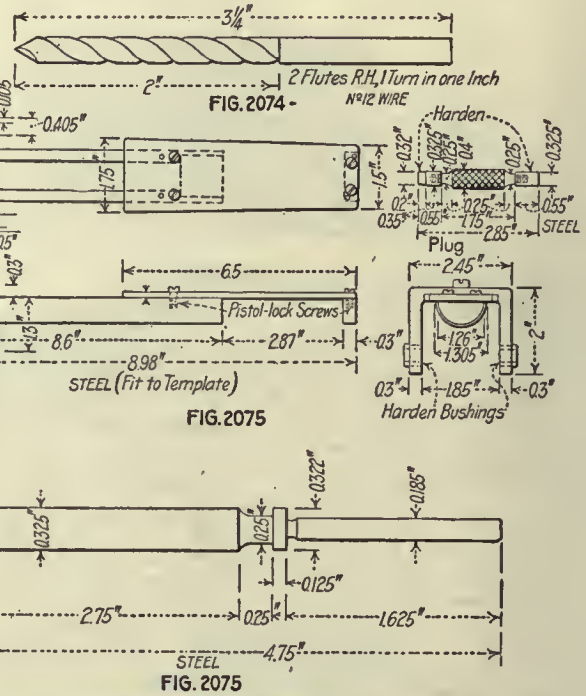

FIG. 2074 - FIG. 2075

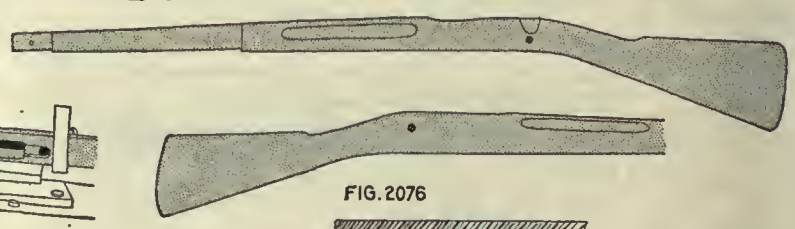

FIG. 2076

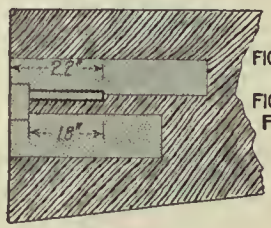

FIG. 2077

FIG. 2072, 2073, 2074 & 2075 OPERATION 32
FIG. 2076 OPERATION 33
FIG. 2077, 2078 & 2079 OPERATION 35

Operations on the Hand Guard

By Ethan Viall

The handguard is a piece of walnut fitted to the top of the rifle barrel and covering approximately about three-quarters of the length of the barrel proper. It protects the hand from the heat of the barrel in continued firing and affords a firm ample grip for the rifleman. The machining of the handguard is as exacting as on the stock and the machines used are of a very similar type.

A far as quality is concerned, the walnut used for hand guards is the same as for stocks, but the pieces may be sawed from planks or made from other pieces large enough to form two blanks. The approximate size of the blocks is given in the transformation of operation 1-A. The shape, dimensions and various cuts made on the hand guard are shown in Fig. 2080. After the blocks are sawed into hand-guard blanks, the latter are trimmed to working length on a double saw, as shown in Fig. 2081. This is just an ordinary double-end circular saw fitted with a sliding table to which an angle stop is screwed. Against this stop the blank to be

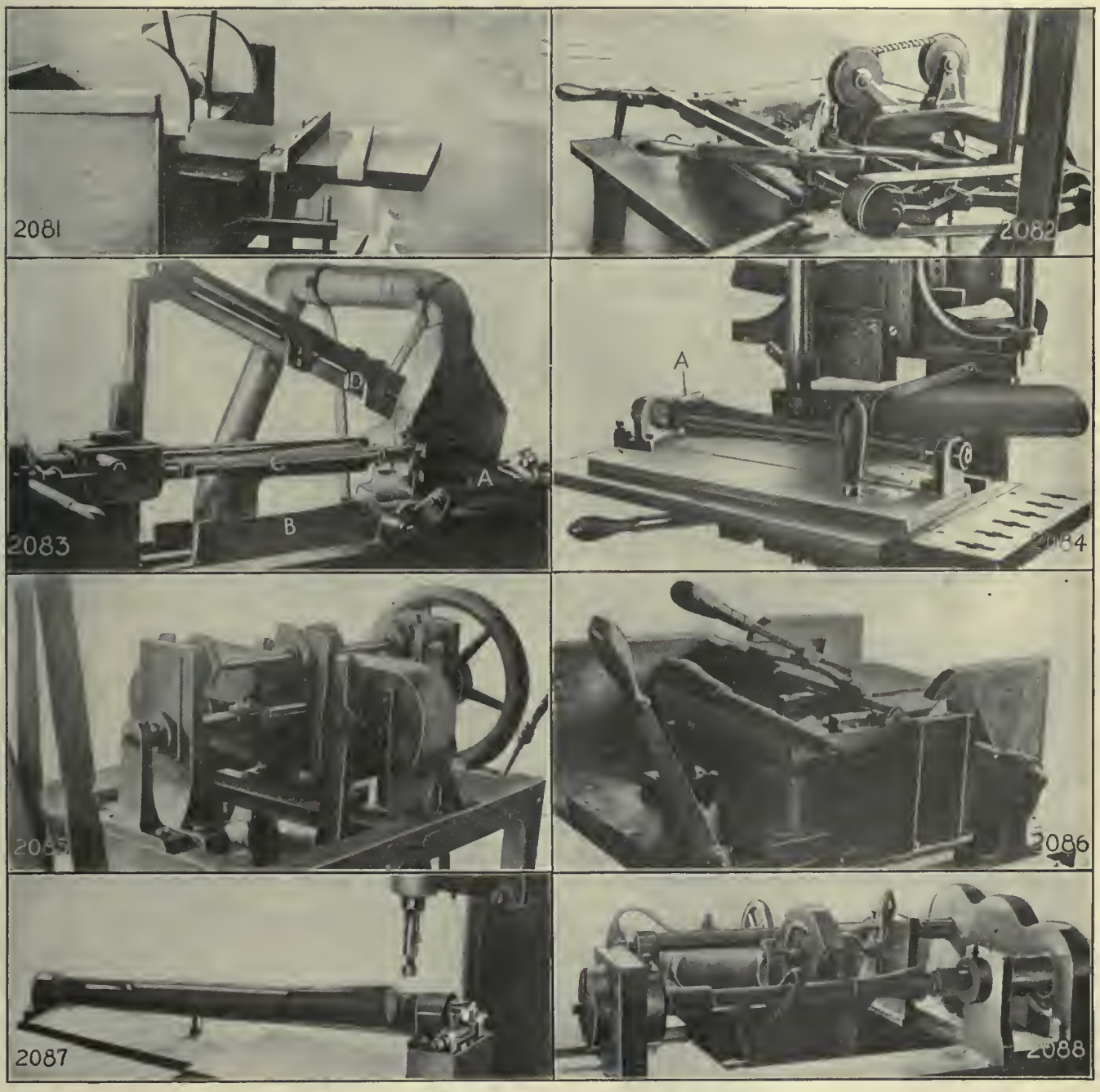

FIGS. 2081 TO 2088. VARIOUS OPERATIONS ON THE HAND GUARD

Fig. 2081—Cutting to length for machinery. Fig. 2082—Grooving for barrel—second cut. Fig. 2083—Turning to remove stock. Fig. 2084—Cutting to match stock for width. Fig. 2085—Turning between bands. Fig. 2086—Cutting to finish length. Fig. 2087—Cutting clearance for windage screw. Fig. 2088—Finish-turning rear end

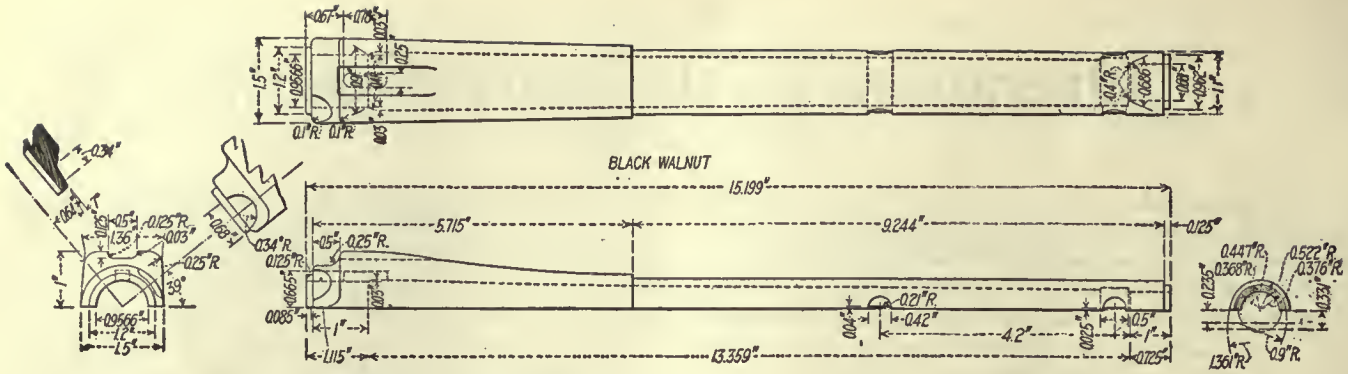

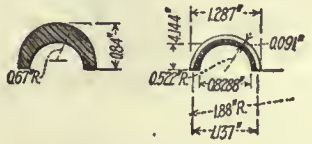

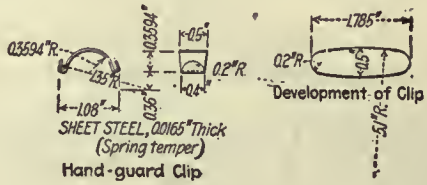

FIG. 2080

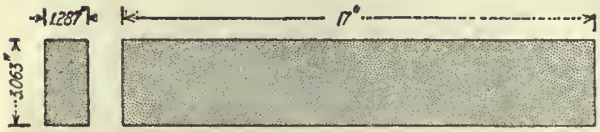

FIG. 2089
OPERATION 1A

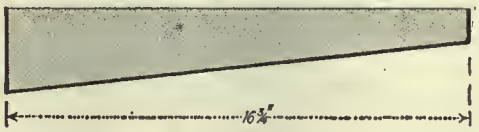

FIG. 2090 OP. 1B

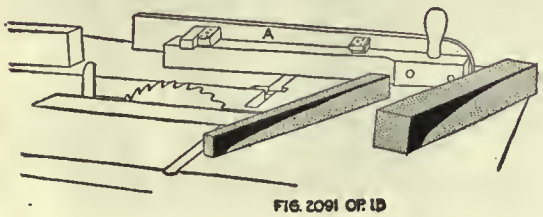

FIG. 2091 OP. 1B

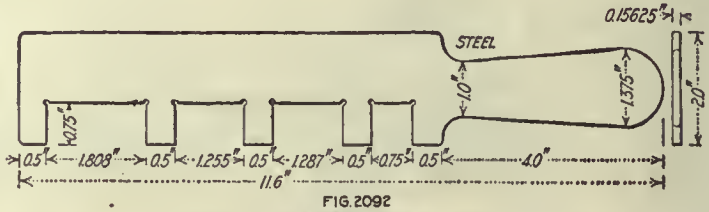

FIG. 2092
OPERATION 1B

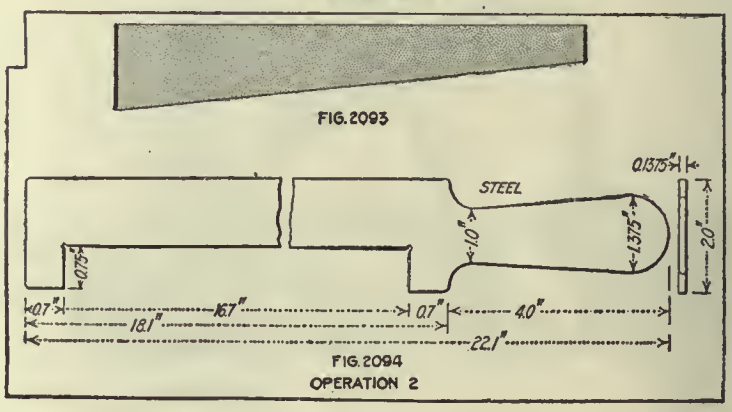

FIG. 2093

FIG. 2094
OPERATION 2

FIG. 2095

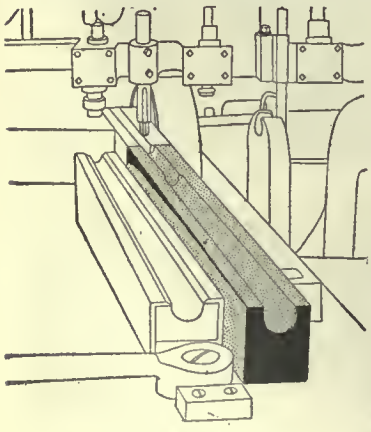

FIG. 2096

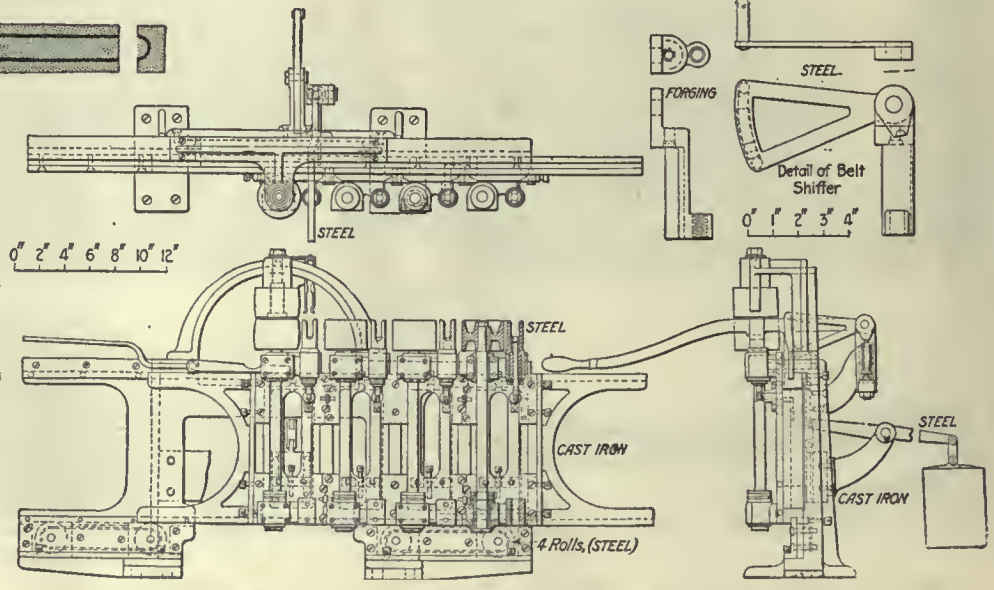

FIG. 2096 A
OPERATION 3

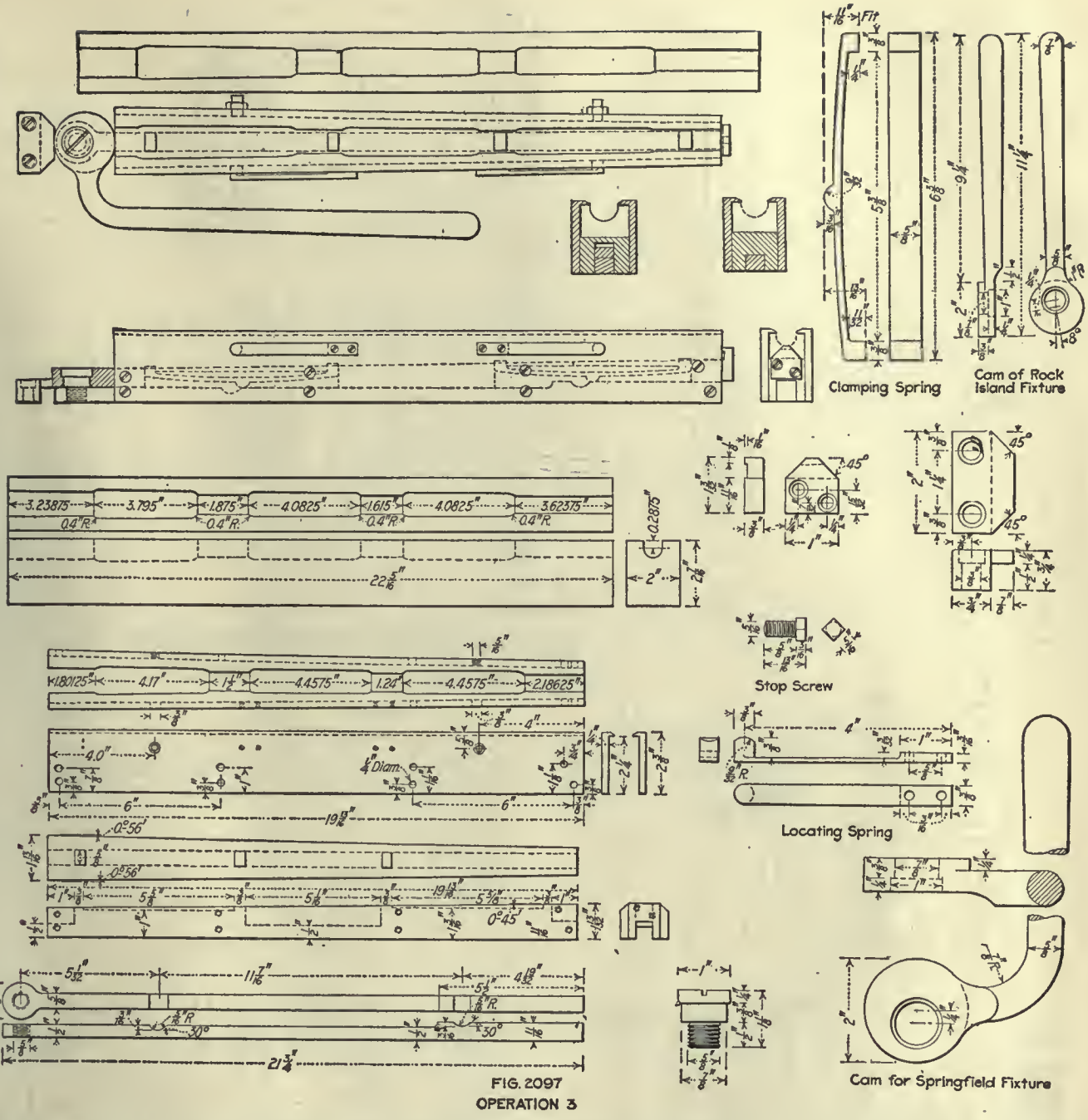

FIG. 2097
OPERATION 3

trimmed is held and fed to the saws. From this point the real machining begins, the order of operation being as follows:

1-a. Sawing from walnut plank or other stock
1-b. Sawing blanks
2. Cutting to length for machinery
3. Cutting groove for barrel—first cut
3½. Cutting groove for barrel—second cut
4. Squaring edges
5. Turning to remove stock—first cut (full length)
11. Cutting to match stock for width
6. Turning for bands
7. Turning between bands
8. Cutting to finish length and crosscutting for clips
9. Cutting clearance for windage screw
10. Turning rear end from lower band to sight base
11½ Cutting field view
Inspect
12. Sanding and finishing
13. Oiling with linseed oil
13½. Cutting for clips
Inspect
13¾. Assembling clips
14. Oiling with cosmoline

The rough-sawed blanks are placed in a bedding machine, Figs. 2096 and 2096-A. They are held in a fixture, Fig. 2097, to which a master profiling form is attached. The tools used are illustrated in Fig. 2098.

Following the rough grooving, the piece is placed in a special heading machine, shown in Fig. 2082 and detailed in Fig. 2100. The heading tool, Fig. 2107, revolves at a high rate of speed and is pressed down into the groove by means of the two handles shown in Fig. 2082. This finishes the shoulder and circular parts of the groove to size.

The squaring of the edges is done on a wood shaper, Fig. 2104, using the work holder seen in Fig. 2105. As the barrel groove fits over a formed mandrel on the work holder, this operation not only squares the edges, but gages the depth of the groove.

In turning to remove surplus stock, the lathe shown in Fig. 2083 is used. Two pieces are clamped on the mandrel *C*, and then the tools at *A* are fed along, guided by the form *B*. There are two turning tools at *A*, one first hogging off the corners and most of the stock, while the second profiles the work. After the pieces have been rough-turned, the slide at the back is fed

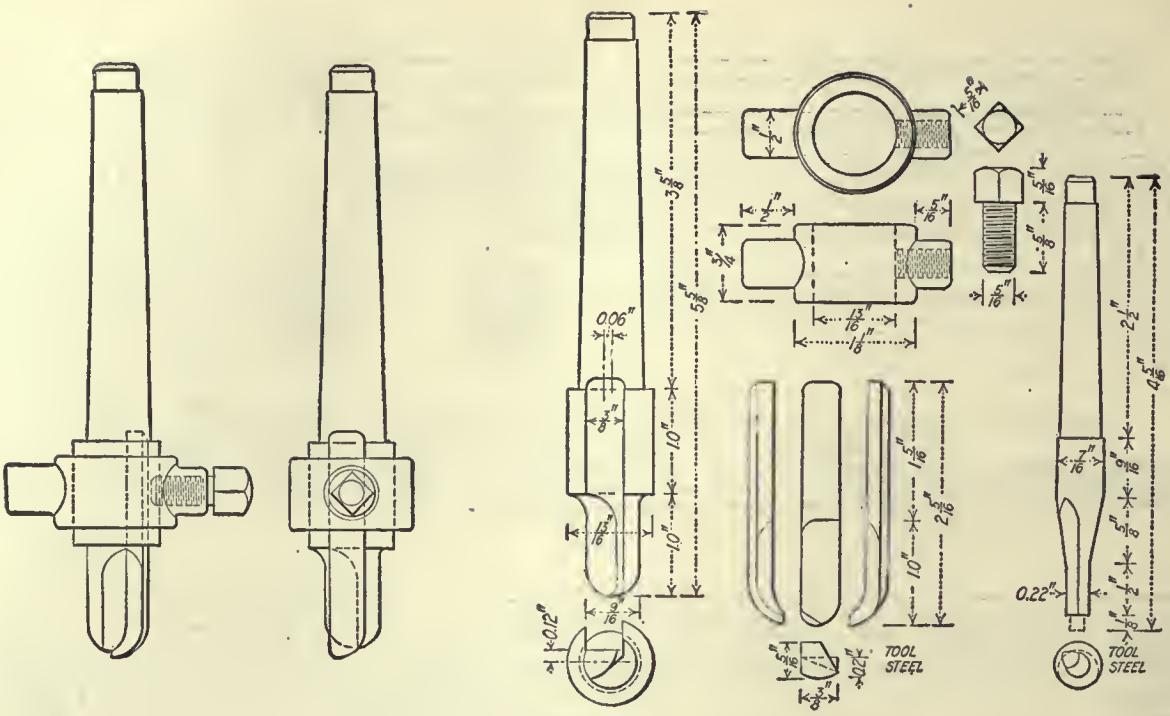

FIG. 2098
OPERATION 3

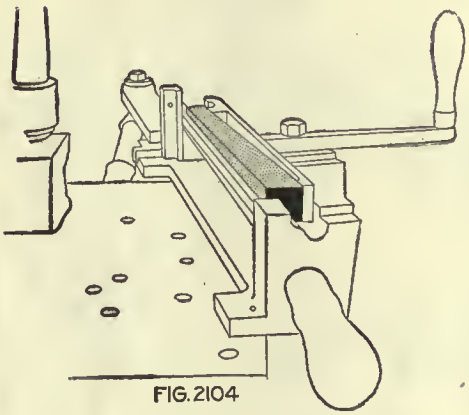

FIG. 2104

FIG. 2103

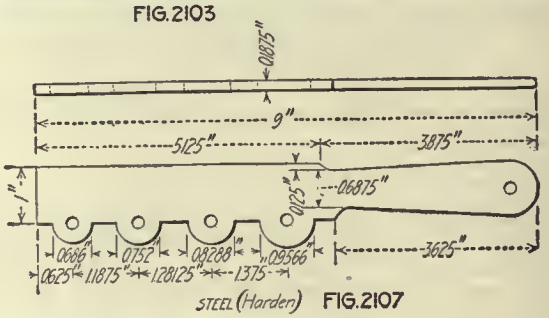

STEEL (Harden) FIG. 2107

FIG. 2099

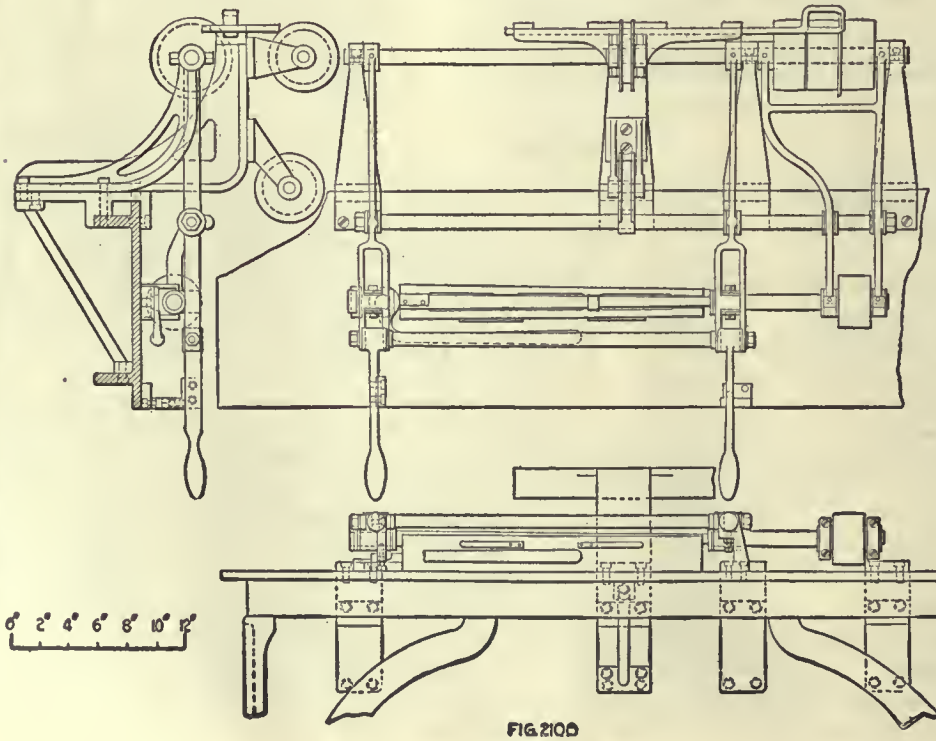

FIG. 2100

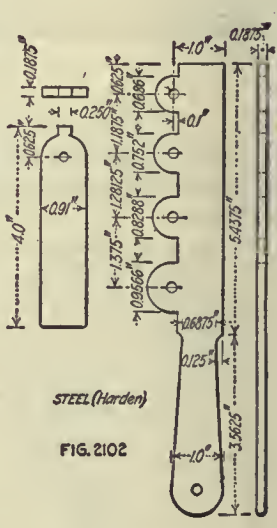

STEEL (Harden)

FIG. 2102

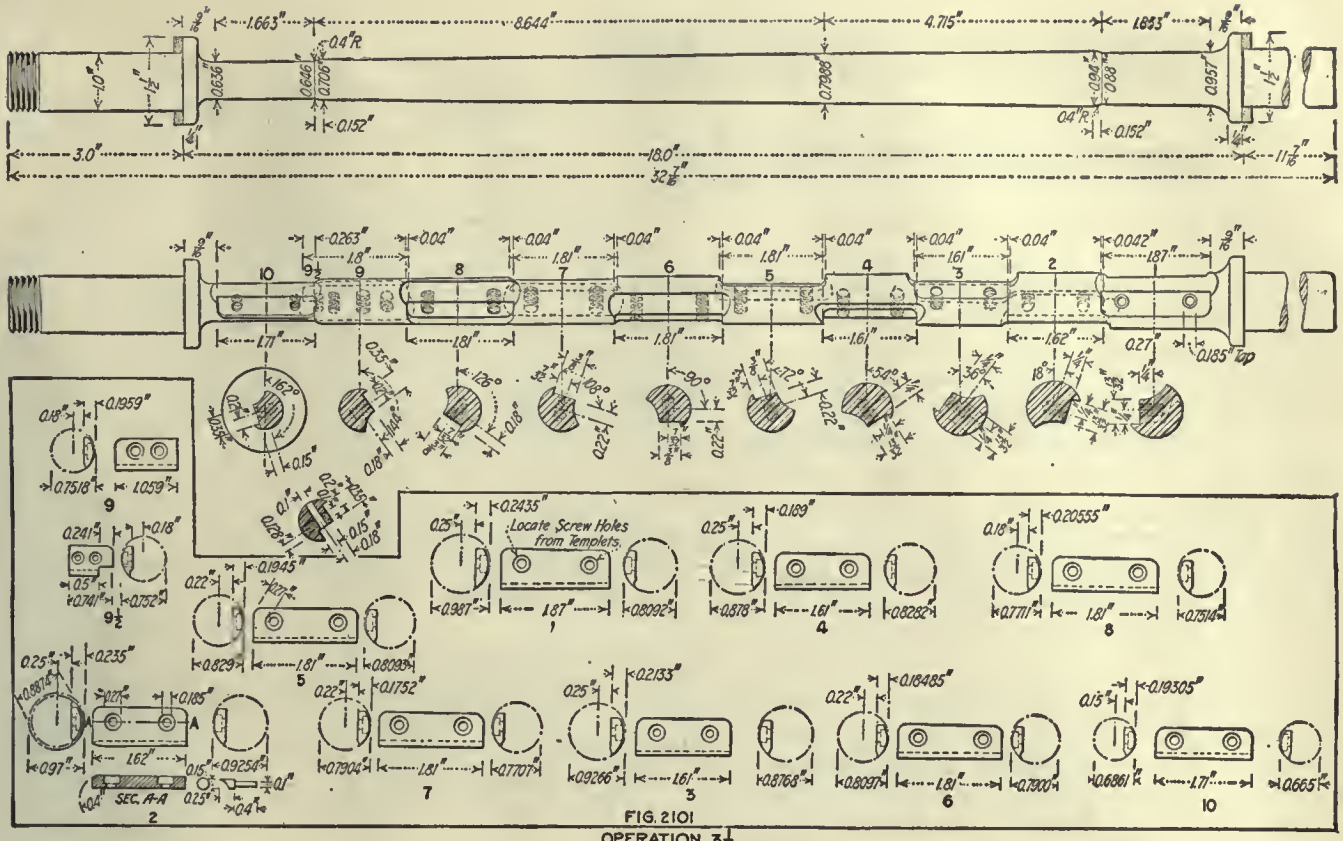

FIG. 2101
OPERATION 3½

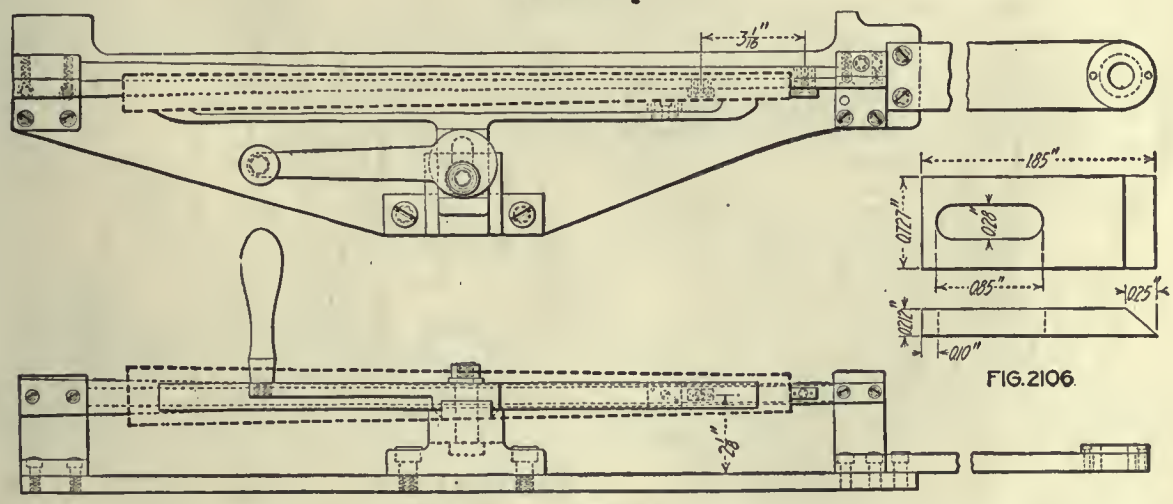

FIG. 2106

FIG. 2105 OPERATION 4

downward and the formed tool *D* cuts a beaded shoulder on the larger ends of the pieces. As in most cases where it is possible, the chips are carried off through a suction hood.

The machine shown in Fig. 2084 is used to profile-trim the edges to match those of the stock for width and outline. Two pieces are trimmed at a time, the work holder being shown in Figs. 2113 and 2115. After the edges are trimmed on one side, the work is indexed halfway over by means of the handle *A*, Fig. 2084, and the opposite edges are finished.

OPERATION 1-A. SAWING FROM WALNUT PLANK OR OTHER STOCK

Transformation—Fig. 2089. Machine Used—Buzz saw. Number of Operators per Machine—One. Gages—Common rule. Production—1210 per 8-hr. day. Note—The length given is practically correct, but the other dimensions vary considerably according to what the piece is cut from, the main idea being to obtain a block large enough to make two blanks.

OPERATION 1-B. SAWING BLANKS

Transformation—Fig. 2090. Machine Used—Buzz saw, Fig. 2091. Number of Operators per Machine—One. Work-Holding Devices—Handled blocks A, Fig. 2091, tapered to suit. Gages—Fig. 2092. Production—605 per day.

OPERATION 2. CUTTING TO LENGTH FOR MACHINERY

Transformation—Fig. 2093. Machine Used—Special duplex saw, Fig. 2081. Number of Operators per Machine—One. Work-Holding Devices—Angle plate on saw carriage. Special Fixtures—Angle plate bolted to saw table. Gages—Fig. 2094. Production—5280 per day.

OPERATION 3. CUTTING GROOVE FOR BARREL (FIRST CUT)

Transformation—Fig. 2095. Machine Used—Garvin special bedding machine, Figs. 2096 and 2096-A. Number of Operators per Machine—One. Work-Holding Devices—Work Holder and master form, Fig. 2097. Cutting Tools—Round-nose hogging-out and small slotting tools, Fig. 2098. Number of Cuts—Two. Average Life of Tool Between Grindings—500 pieces. Gages—See operation 3½. Production—660 per day.

OPERATION 3½. CUTTING GROOVE FOR BARREL (SECOND CUT)

Transformation—Fig. 2099. Machine Used—Special heading machine, Figs. 2082 and 2100. Number of Operators per Machine—One. Work-Holding Devices—See operation 3. Cutting Tools—Heading rod, Fig. 2101. Gages—Fig. 2102. Production—2640 per day.

OPERATION 4. SQUARING EDGES

Transformation—Fig. 2103. Machine Used—Wood shaper, Fig. 2104. Number of Operators per Machine—One. Work-

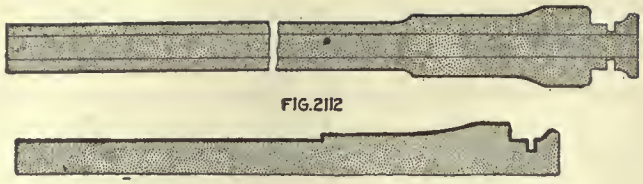

FIG. 2112

FIG. 2108

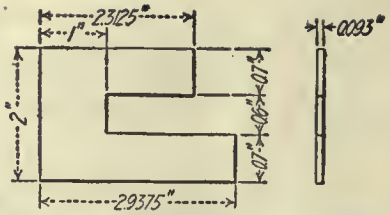

FIG. 2111 STEEL (Harden)

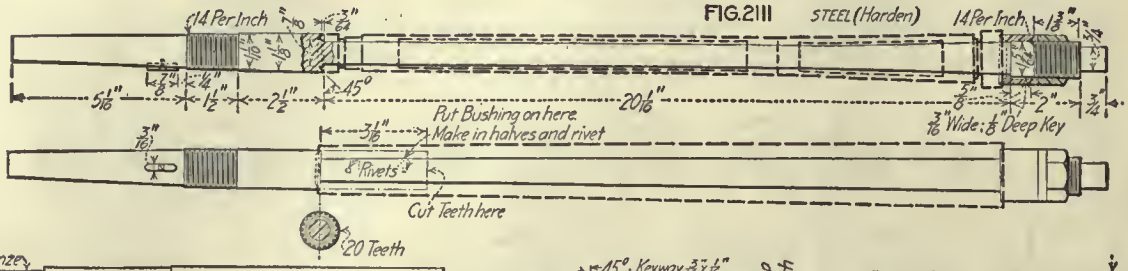

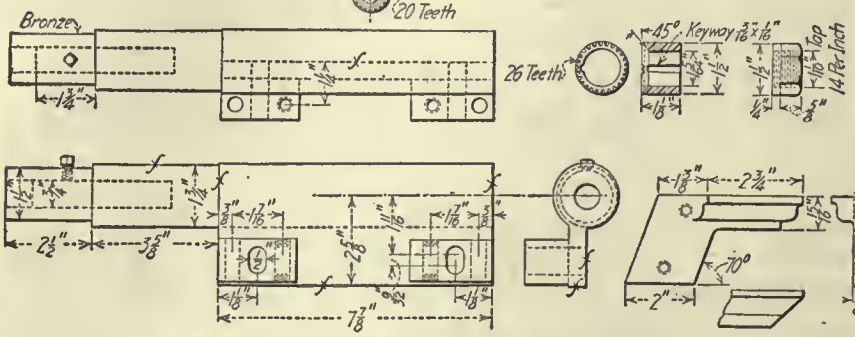

FIG. 2109

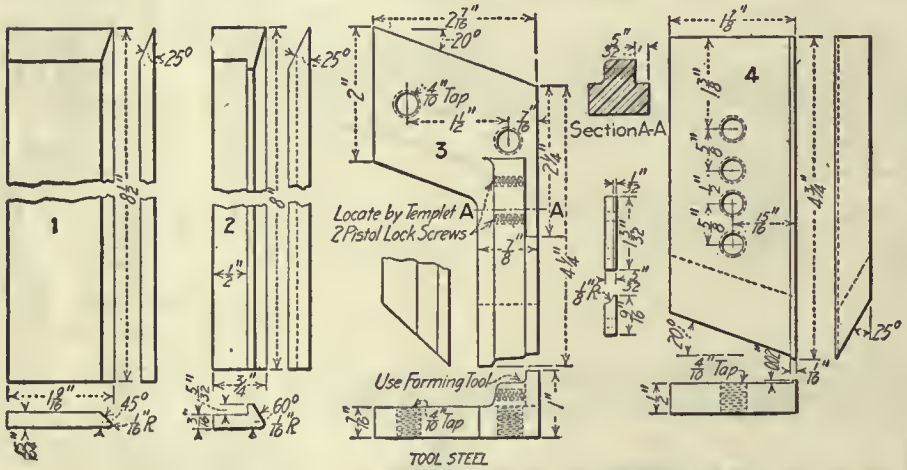

FIG. 2110 OPERATION 5

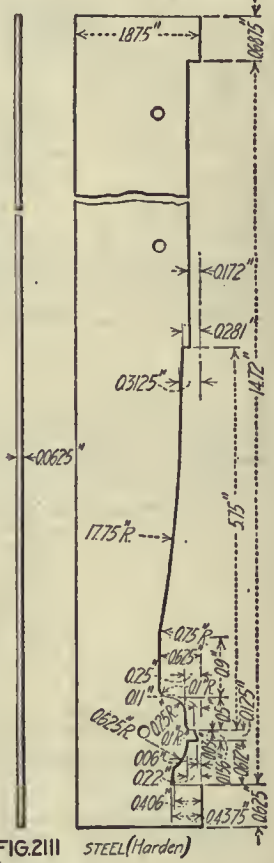

FIG. 2111 STEEL (Harden)

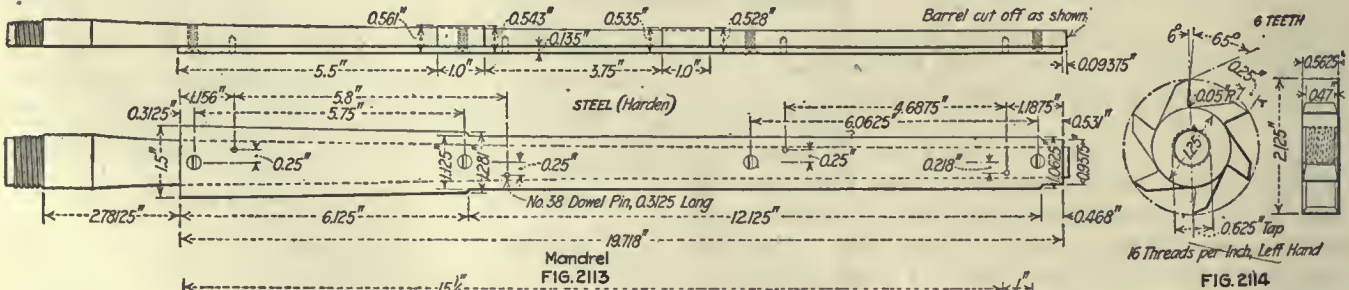

Mandrel
FIG. 2113

FIG. 2114

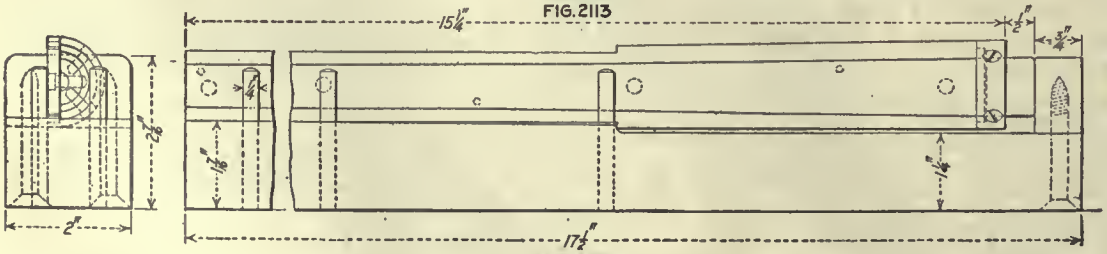

FIG. 2115

OPERATION 11

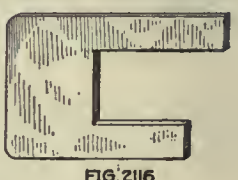

FIG. 2116

Holding Devices—Fig. 2105. Tool-Holding Devices—Cutter head. Cutting Tools—Fig. 2106. Average Life of Tool Between Grindings—2000 pieces. Gages—Fig. 2107. Production—2420 per day.

OPERATION 5. TURNING TO REMOVE STOCK

Transformation—Fig. 2108. Machine Used—Special lathe, Fig. 2083. Number of Operators per Machine—One. Work-Holding Devices—Special mandrel, Fig. 2109. Cutting Tools—Tools for body turn and beading, Fig. 2110. Number of Cuts—Three. Average Life of Tool Between Grindings—600 pieces. Gages—Fig. 2111. Production—550 per day.

OPERATION 11. CUTTING TO MATCH STOCK FOR WIDTH

Transformation—Fig. 2112. Machine Used—Wood shaper, Fig. 2084. Number of Operators per Machine—One. Work-Holding Devices—Mandrel, Fig. 2113. Cutting Tools—Fig. 2114. Average Life of Tool Between Grindings—600 pieces. Special Fixtures—Mandrel cradle and master form; see Figs. 2084 and 2115. Gages—Fig. 2116. Production—1232 per day. Note—The gage shown is used to test width of small end, and master form is depended upon for the rest.

A MODIFIED Blanchard lathe, Figs. 2118 and 2119, is used to turn for the bands, and a similar lathe, Fig. 2085, is used to turn between the bands. The work is turned or fed by hand, by means of the large handwheel shown. The rate of feed depends on the hardness and grain of the wood.

The hand guard is cut to finish length in the duplex saw, Figs. 2086 and 2129. The piece is held down over a locating form by means of a hand lever and spring clamping piece, and then the work is fed to the saws by a lever in front, which operates the sliding carriage. Clearance for the windage screw is cut as shown in Fig. 2087, with the tool in Fig. 2136.

Again a modified Blanchard type of lathe is used to finish-turn the hand guard from the lower band to the sight base. Two pieces are placed on the mandrel and clamped by cupped collars at each end. A spring clamp is slipped over the pieces on the part not turned to prevent spring or chatter.

Following this, the field view is cut in a special wood shaper, Fig. 2141. The field view is a groove cut in the top side of the handguard in order to give a clear line from the rear to the front sight. The handguard is held in a special shaping fixture as shown. The piece is located by the barrel groove which fits over a part of an old barrel. A clamp holds it securely in place as the operator pushes it past the tongued cutter.

The final handwork of sanding and finishing operation is very similar to that on the stock previously described, as the workman first shaves the wood to the edges of a templet, Fig. 2144, and then scrapes and sands to a finish. After the finish-scraping, the work is dipped in boiled linseed oil, drained and dried in the air overnight.

Clips are small formed spring-steel pieces that contact with the barrel. The seats for the ends of these clips are cut in the machine shown in Fig. 2147, using the workholder, Fig. 2148. Next, the clips are slipped into place by hand and then, together with the butt end of the guard, are coated with cosmoline put on with a brush.

FIG. 2117

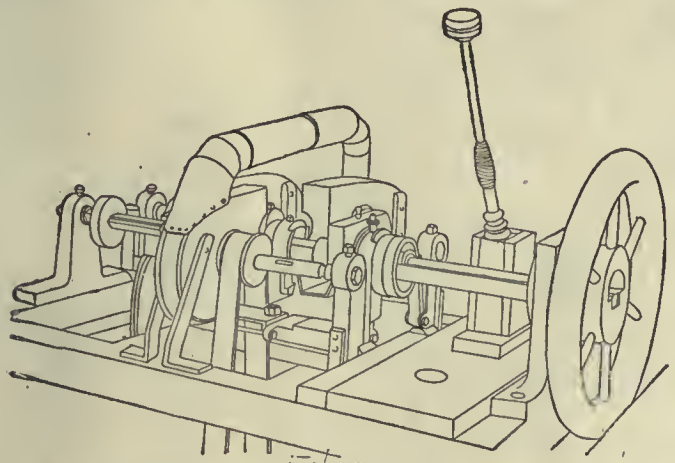

FIG. 2118

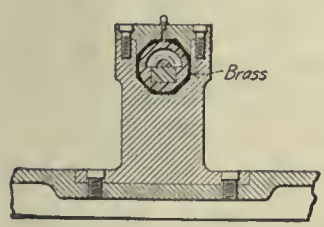

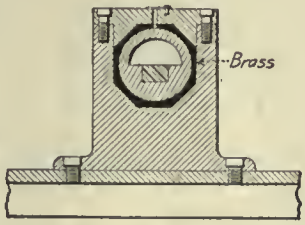

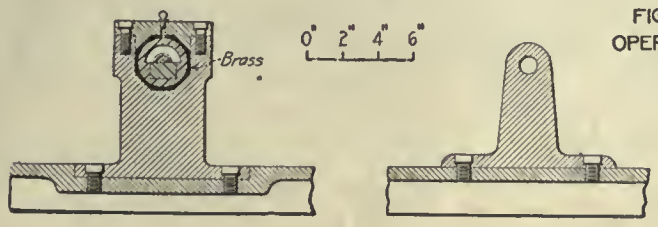

FIG. 2119
OPERATION 6

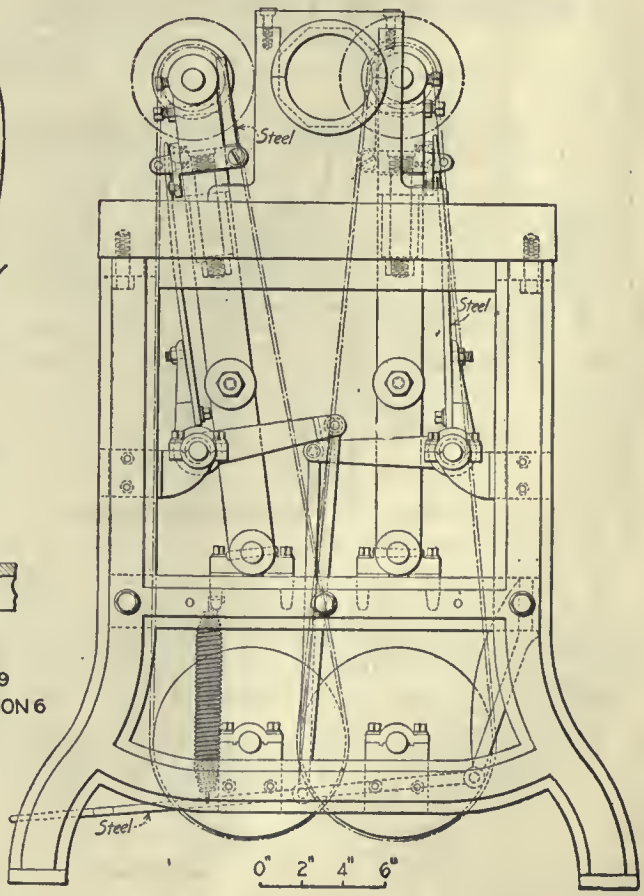

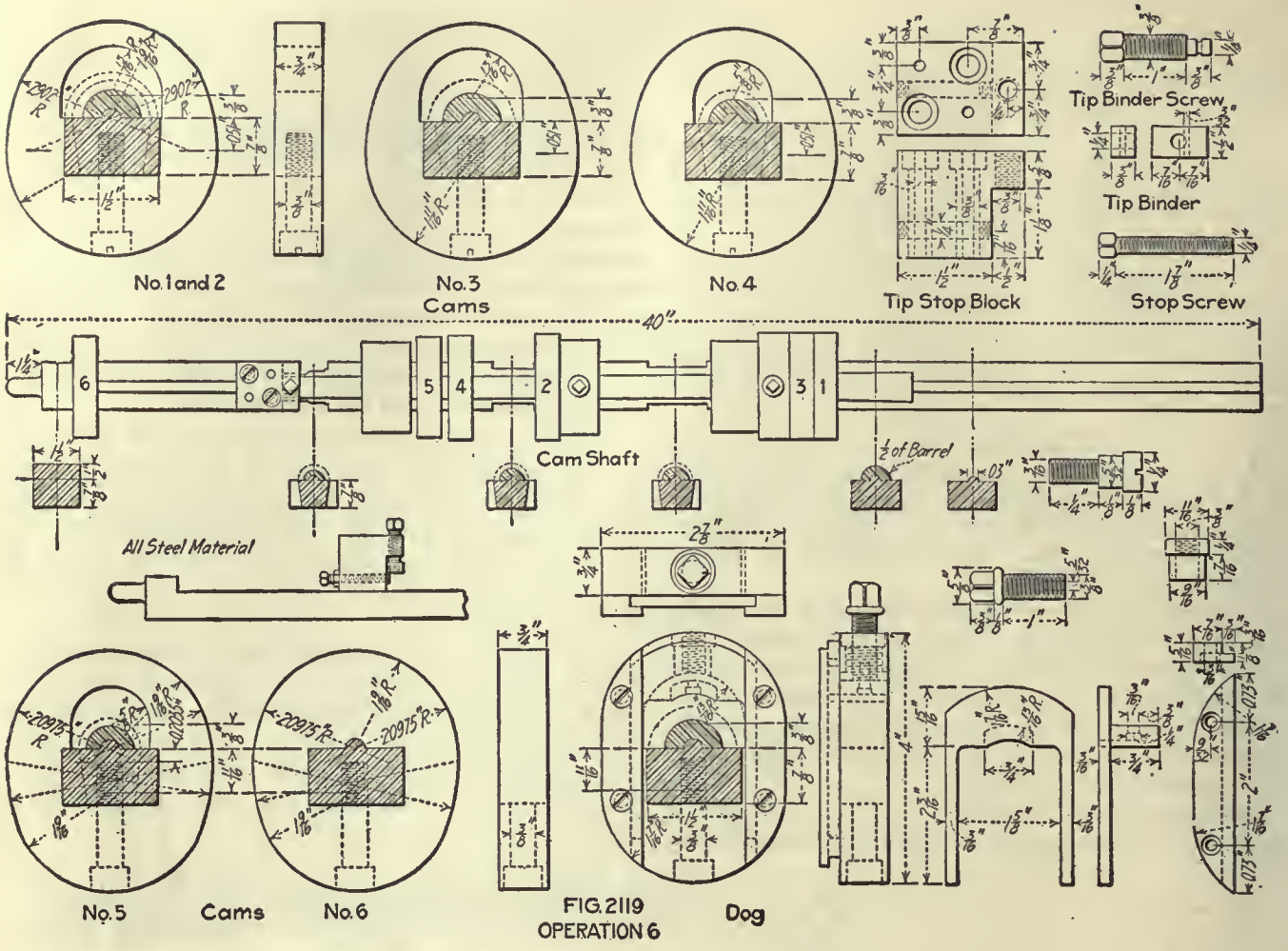

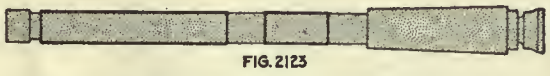

FIG. 2123

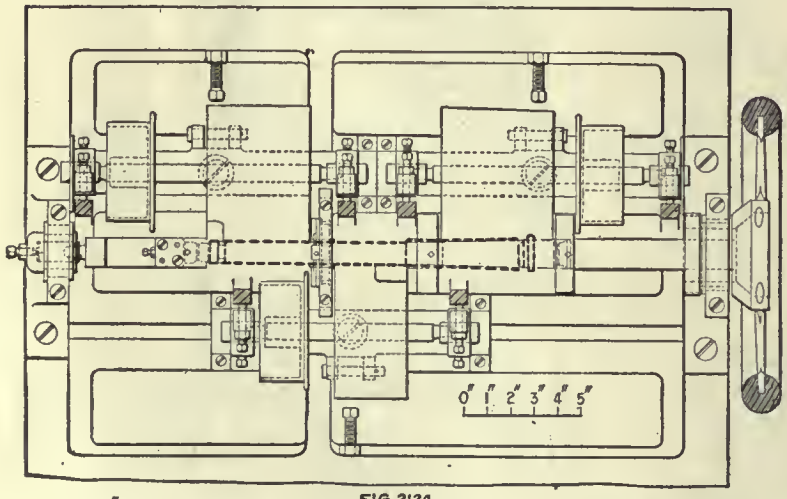

FIG. 2124

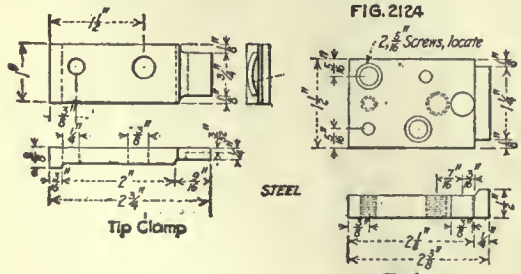

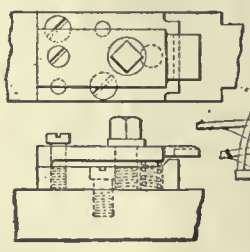

OPERATION 7

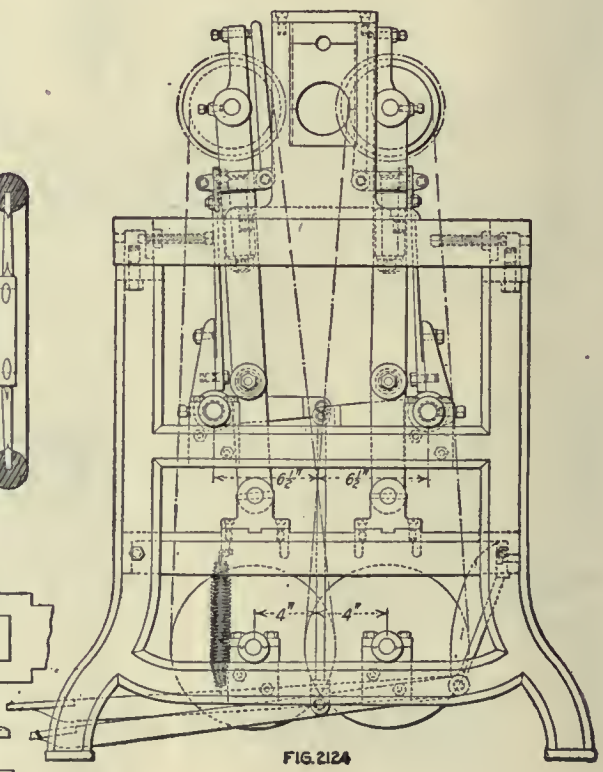

FIG. 2124

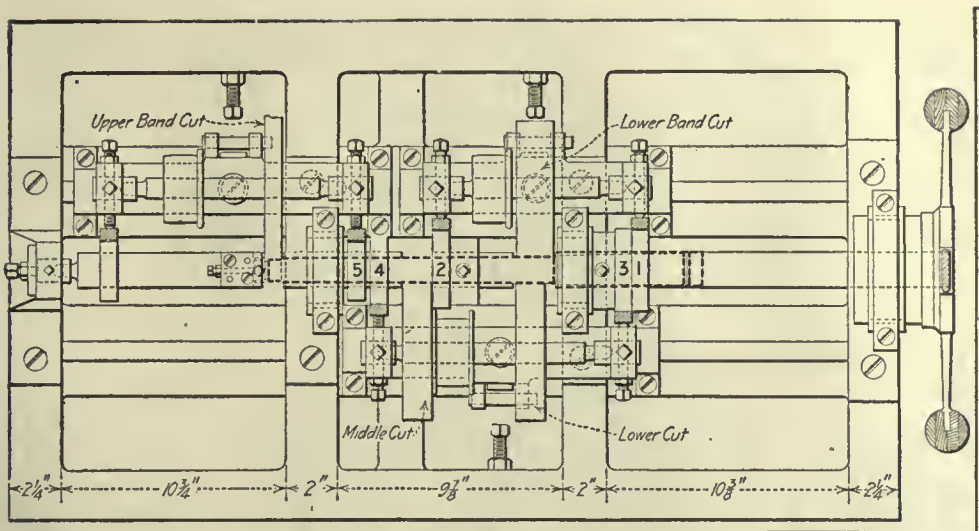

FIG. 2119

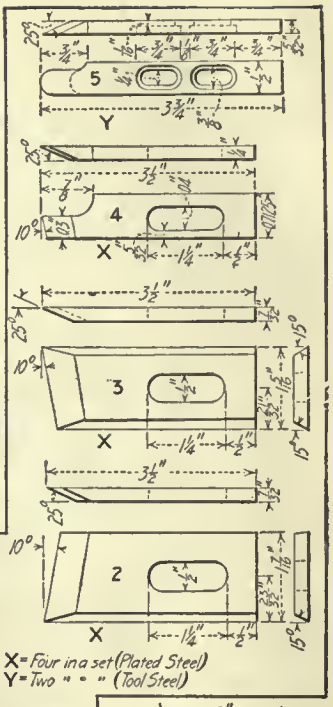

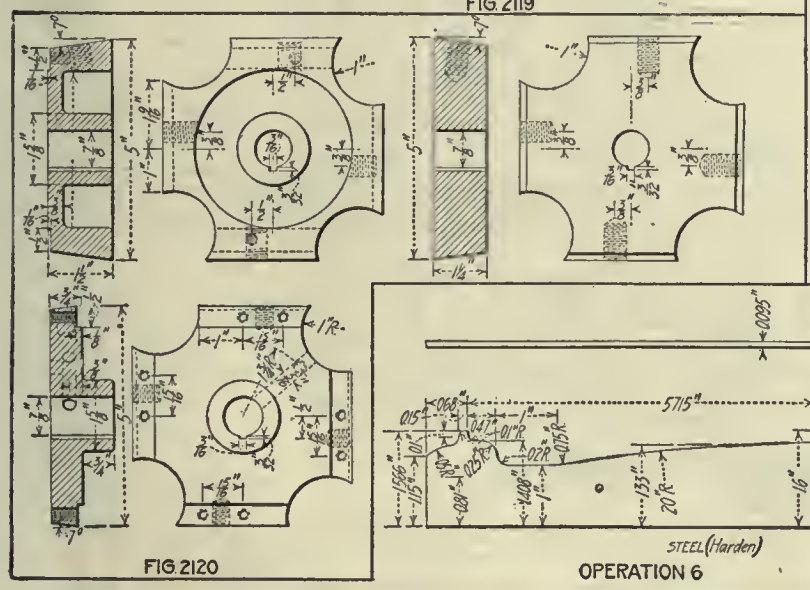

FIG. 2120

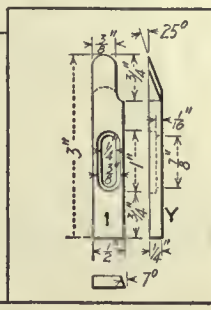

FIG. 2121

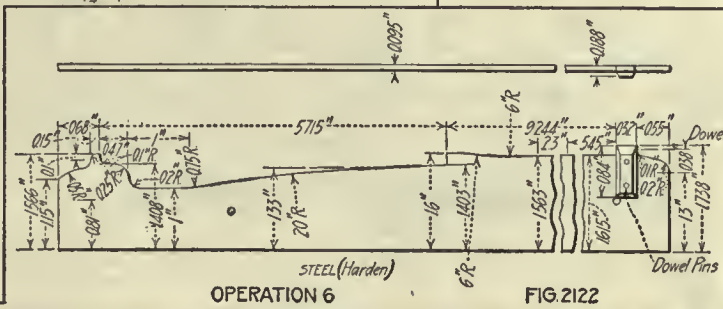

OPERATION 6

FIG. 2122

FIG. 2128

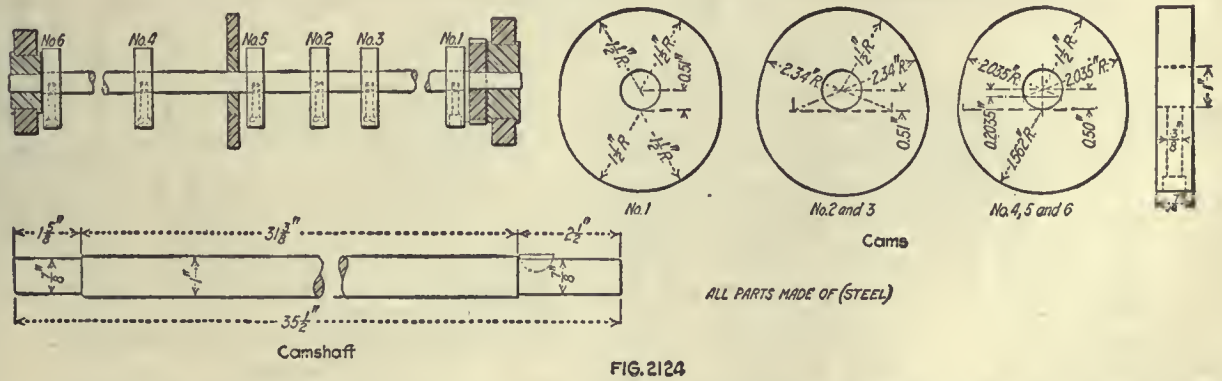

FIG. 2124

OPERATION 6. TURNING FOR BANDS

Transformation—Fig. 2117. Machine Used—Special cam lathe, Figs. 2118 and 2119. Number of Operators per Machine—One. Tool-Holding Devices—Tool heads, Fig. 2120. Cutting Tools—Fig. 2121. Gages—Fig. 2122. Production—880 per day.

OPERATION 7. TURNING BETWEEN BANDS

Transformation—Figs. 2123 and 2124. Machine Used—Special cam lathe, Fig. 2085. Number of Operators per Machine—One. Work-Holding Devices—Fig. 2125. Tool-Holding Devices—Cutter heads, Fig. 2126. Cutting Tools—Fig. 2127. Average Life of Tool Between Grindings—600 pieces. Production—880 per day. Note—Operator is careful not to turn below cuts for bands.

OPERATION 8. CUTTING TO FINISH LENGTH

Transformation—Fig. 2128. Machine Used—Special duplex saw, Figs. 2086 and 2129. Number of Operators per Machine—One. Tool-Holding Devices—Fig. 2130. Cutting Tools—Fig. 2131. Average Life of Tool Between Grindings—2000 pieces Gages—Machine operator's gage, Fig. 2132; inspector's gage, Fig. 2133. Production—3850 per 8-hr. day.

OPERATION 9. CUTTING CLEARANCE FOR WINDAGE SCREW

Transformation—Fig. 2134. Machine Used—Special machine, Fig. 2087. Number of Operators per Machine—One. Work-Holding Devices—Fig. 2135. Cutting Tools—Fig. 2136. Average Life of Tool Between Grindings—2000 pieces. Gages—Fig. 2137. Production—4950 per 8-hr. day.

OPERATION 10. TURNING REAR END FROM LOWER BAND TO SIGHT BASE

Transformation—Fig. 2138. Machine Used—Blanchard type lathe, Fig. 2088. Number of Operators per Machine—One.

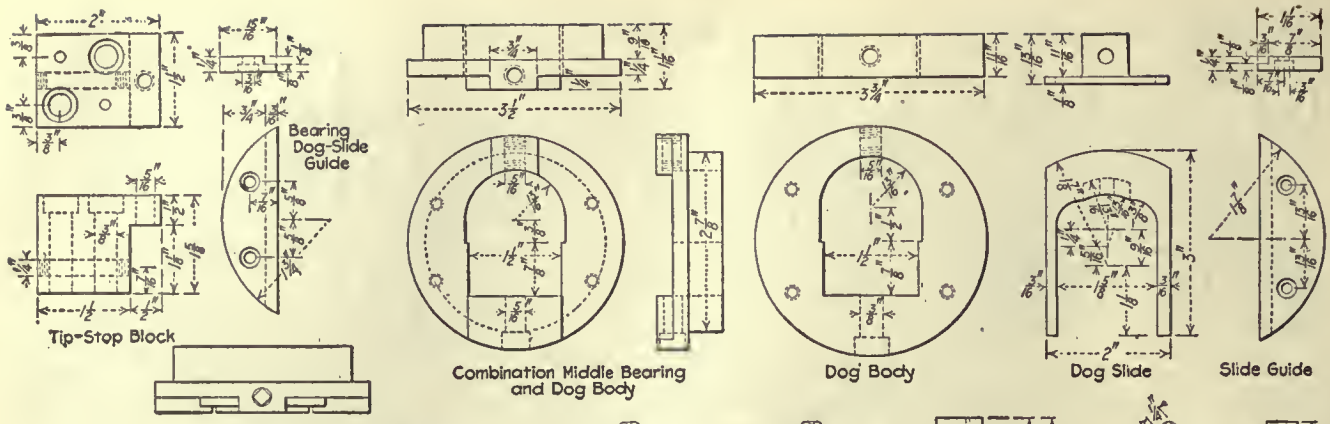

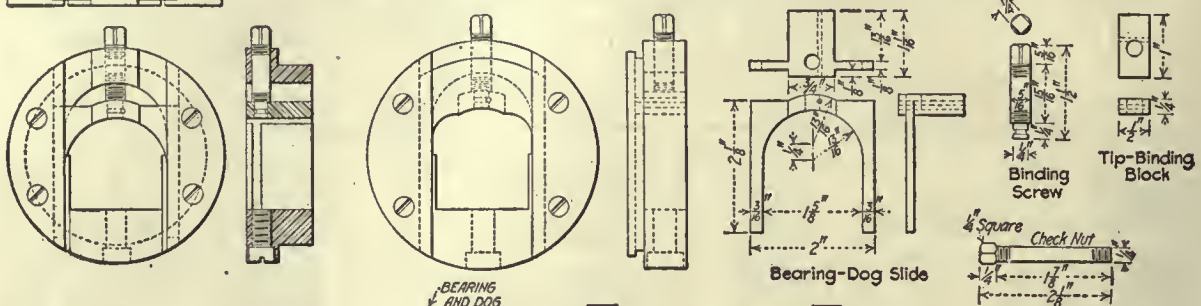

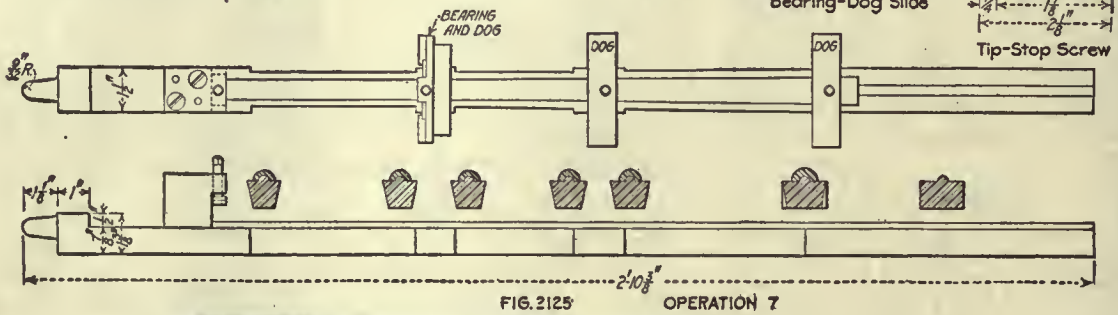

FIG. 2125 OPERATION 7

FIG. 2134

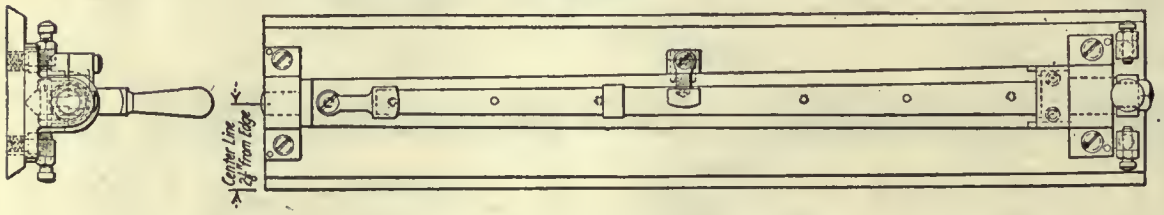

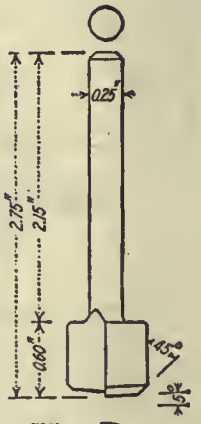

OPERATION 9

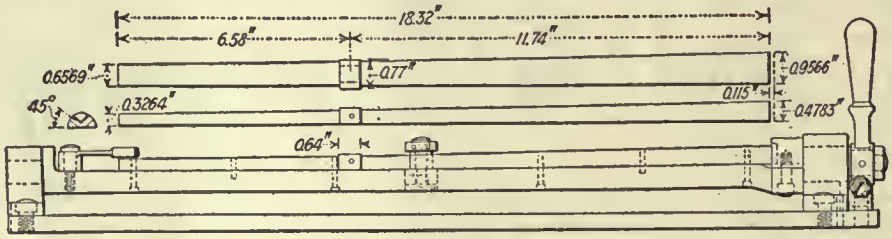

FIG. 2135

FIG. 2136

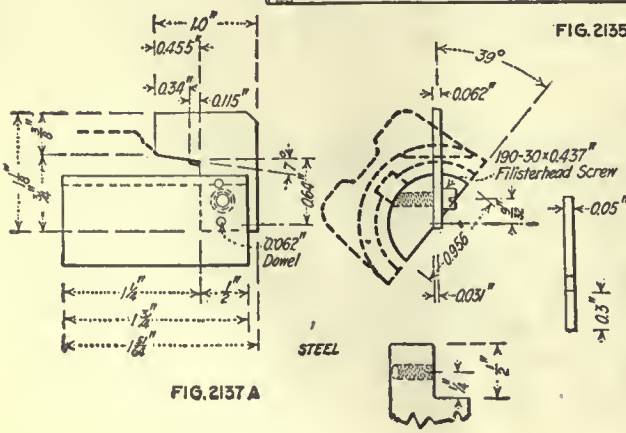

FIG. 2137 A

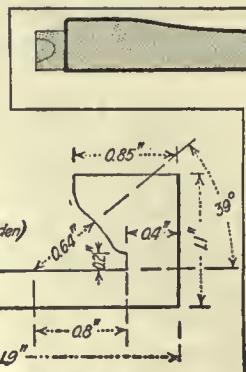

FIG. 2137 B

FIG. 2138

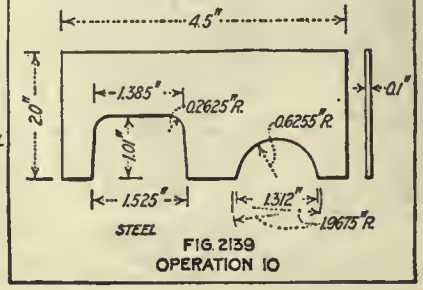

FIG. 2139 OPERATION 10

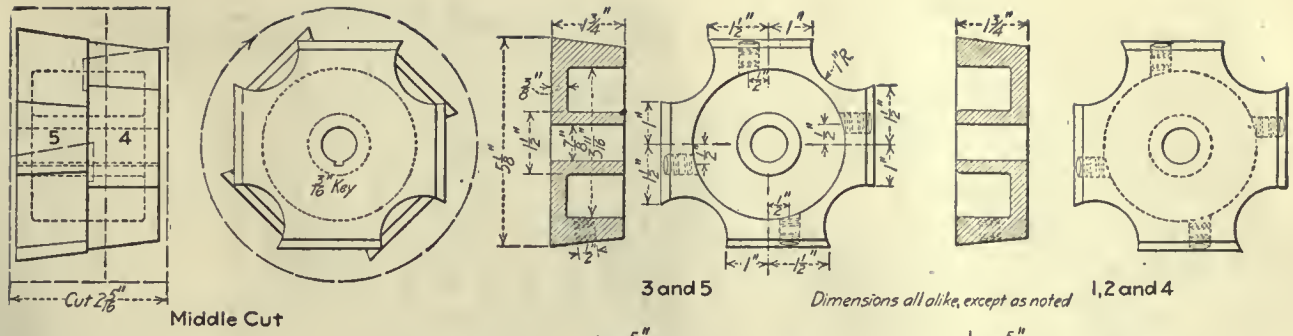

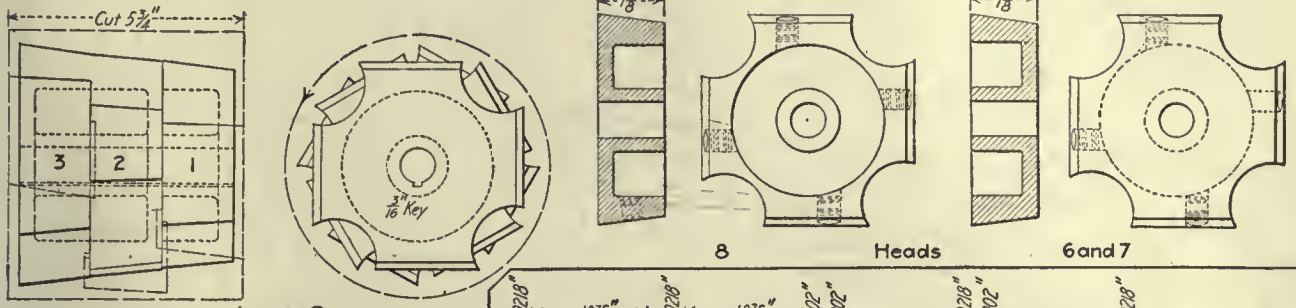

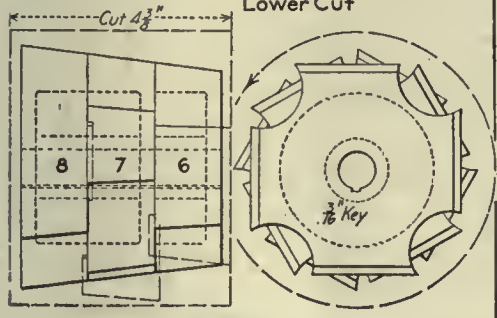

FIG. 2126

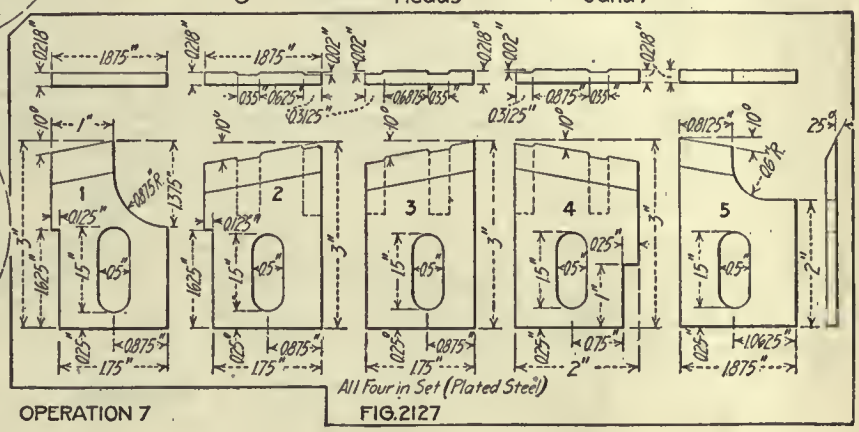

OPERATION 7

FIG. 2127

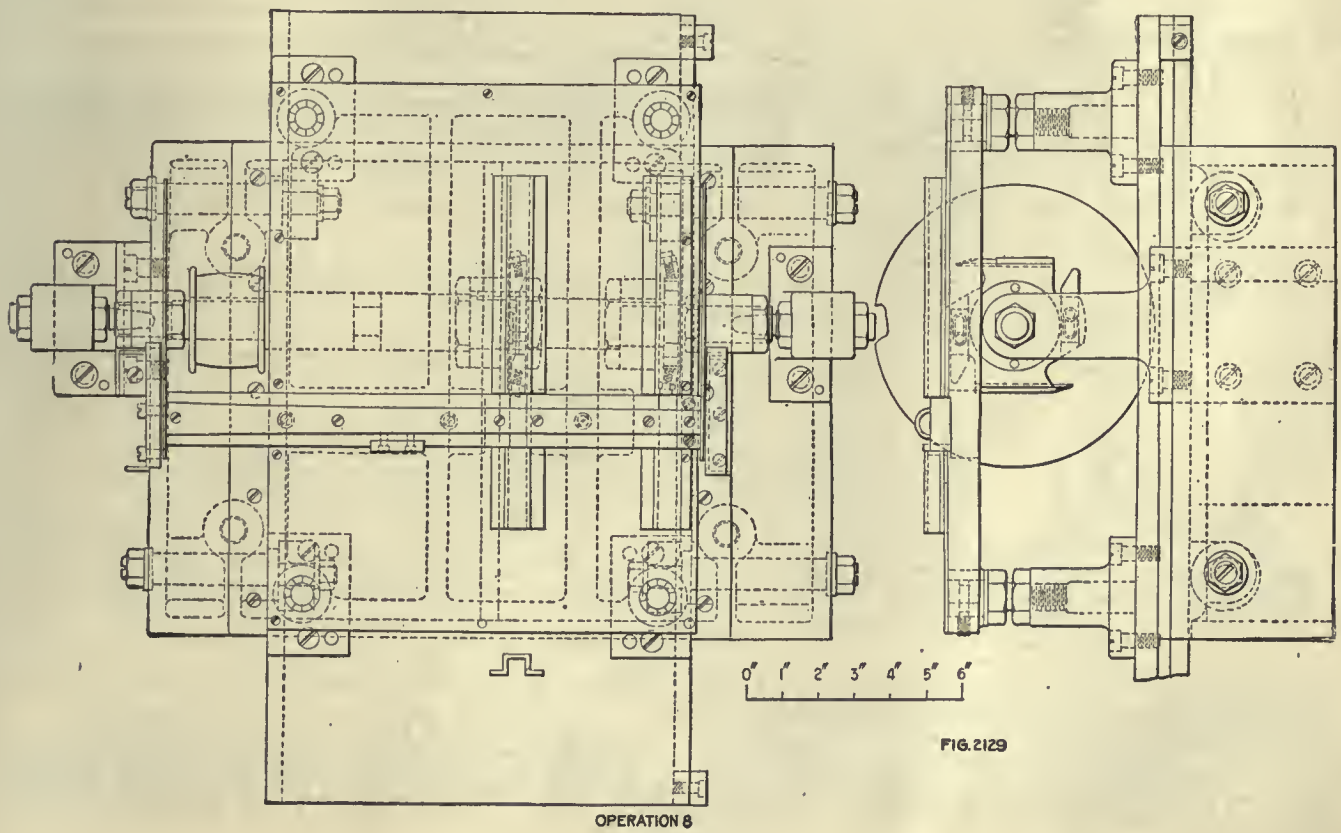

FIG. 2129

OPERATION 8

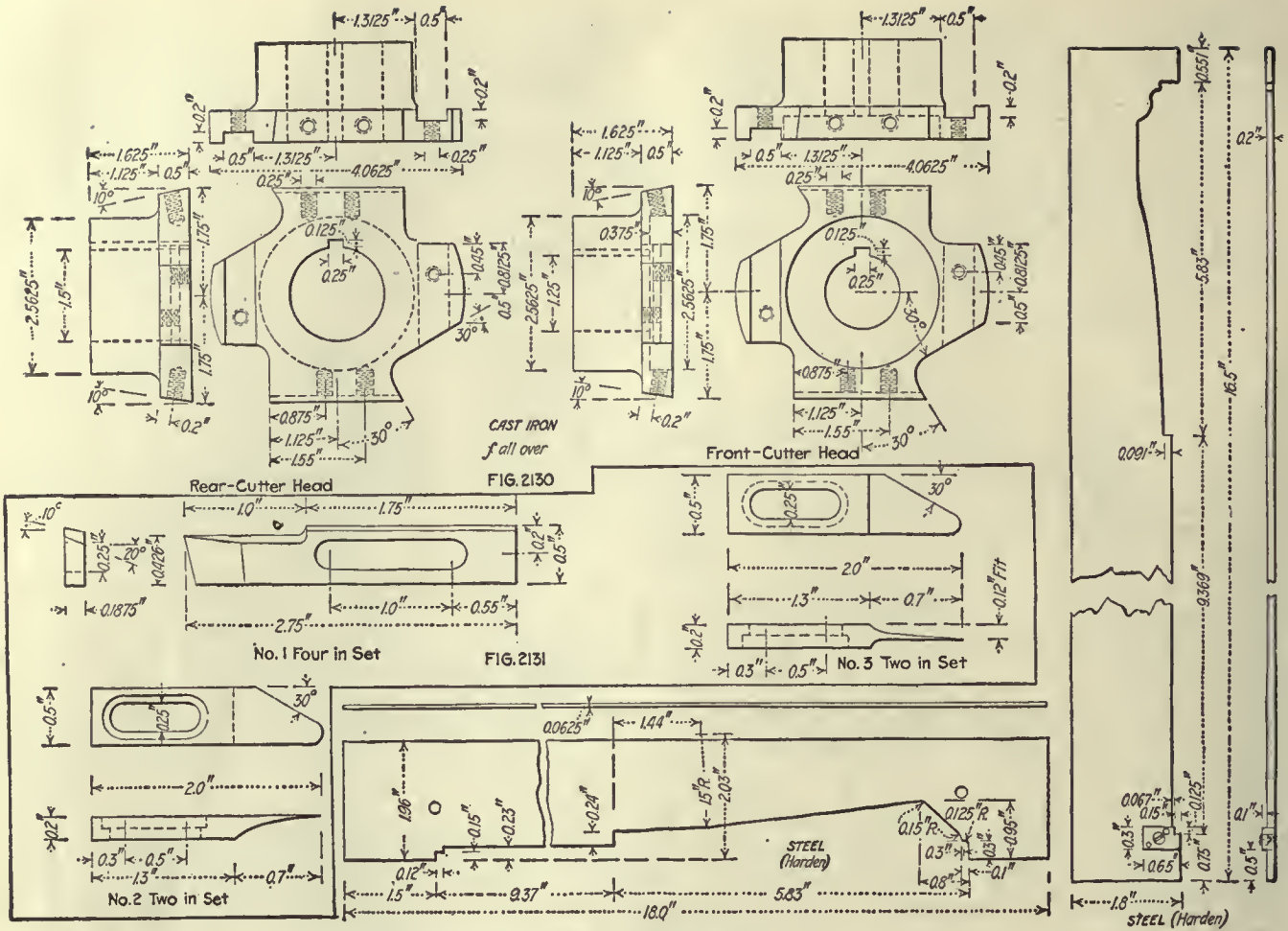

FIG. 2130 FIG. 2131 FIG. 2132 FIG. 2133

OPERATION 8

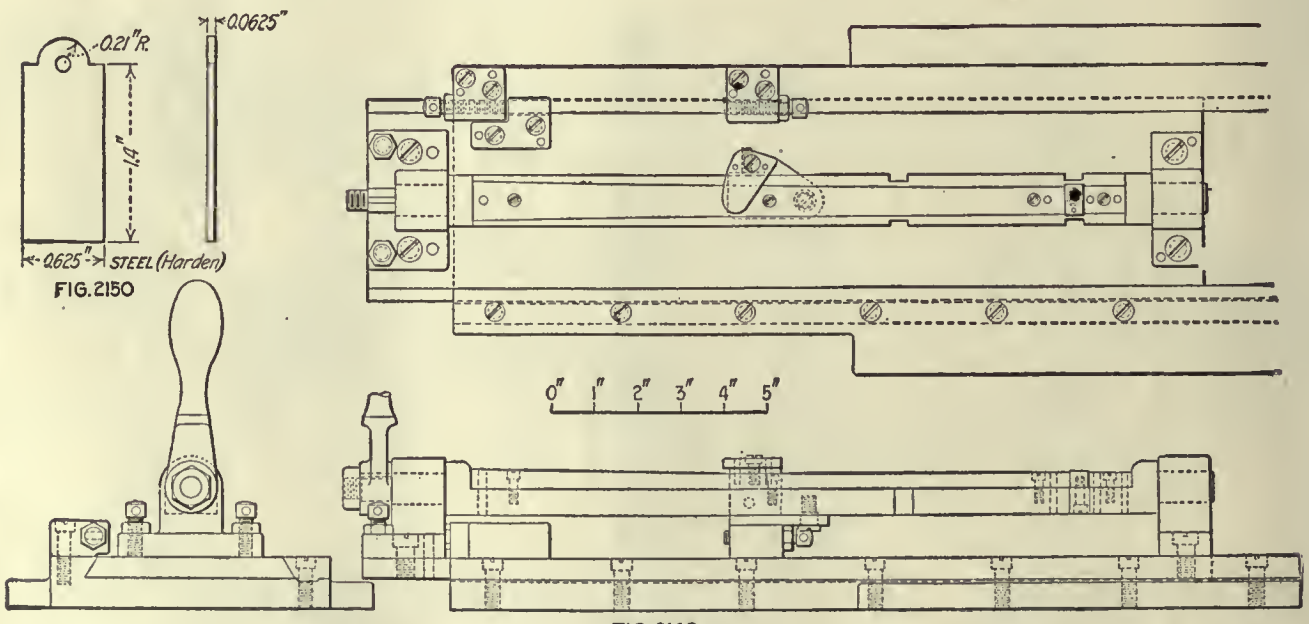

FIG. 2150

FIG. 2148

OPERATION 13½

Average Life of Tool Between Grindings—500 to 700 pieces. Gages—Fig. 2139. Production—1210 per 8-hr. day. Note—Two pieces are turned at once; clip shown on work is to prevent spring and chatter during cut.

OPERATION 11¼. CUTTING FIELD VIEW

Transformation—Fig. 2140. Machine Used—Special wood shaper, Fig. 2141. Number of Operators per Machine—One. Cutting Tools—Fig. 2142. Average Life of Tool Between Grindings—1000 pieces. Gages—Fig. 2143. Production—3300 per 8-hr. day.

OPERATION 12. SANDING AND FINISHING

Number of Operators—One. Description of Operation—Operator holds work as shown in Fig. 2144 and shaves to edges of templet, then scrapes and sandpapers all over, using spoke shaver, scrapers and Nos. 1, 0, 00 and 000 sandpaper. Gages—Fig. 2145. Production—121 per 8-hr. day.

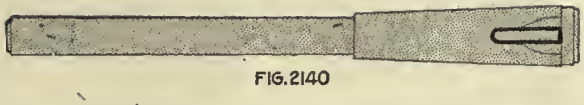

FIG. 2140

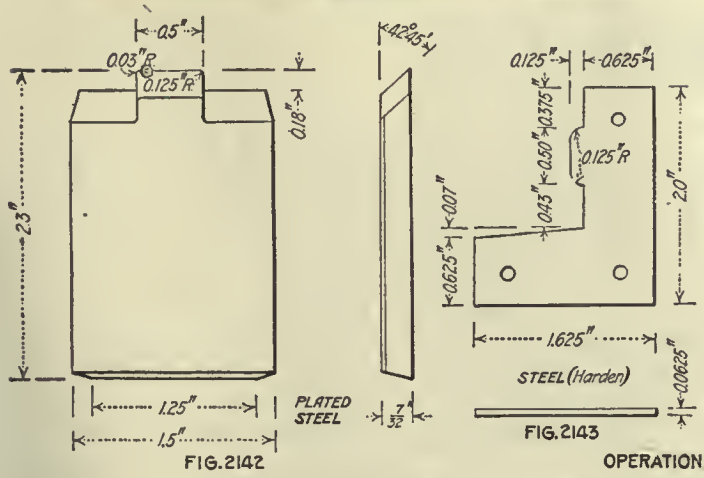

FIG. 2142

FIG. 2143

OPERATION 11½

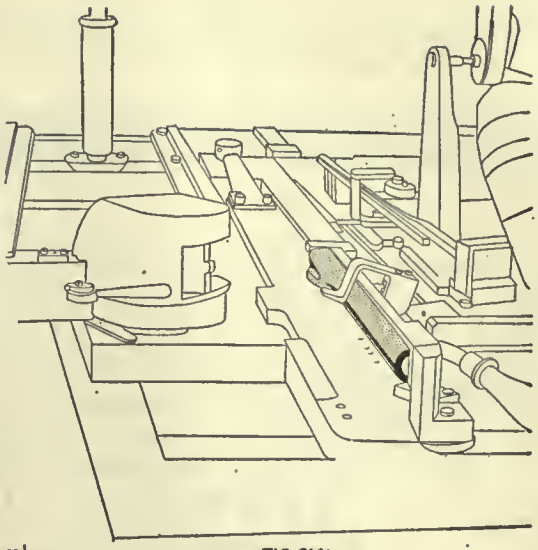

FIG. 2141

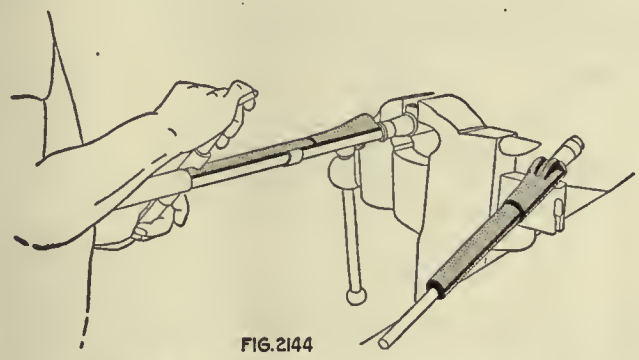

FIG. 2144

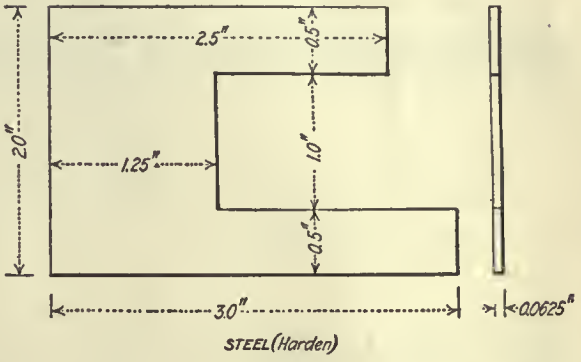

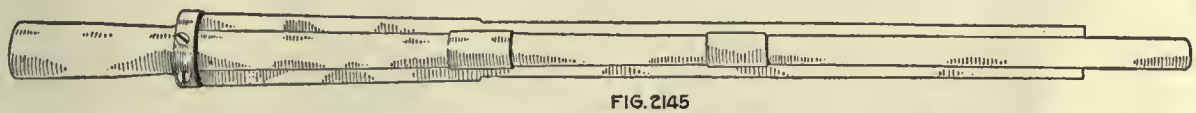

FIG. 2145

OPERATION 12

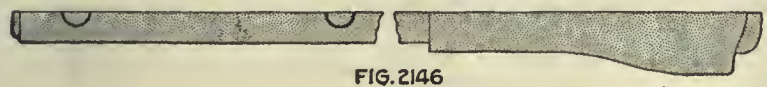

FIG. 2146

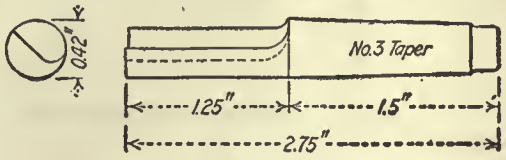

FIG. 2149

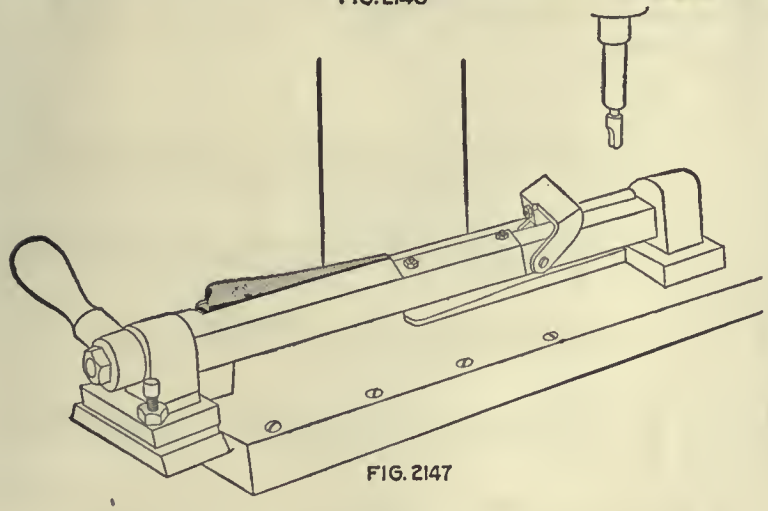

FIG. 2147

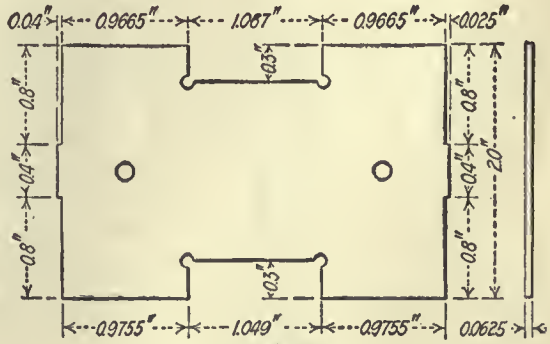

FIG. 2150

OPERATION 13. OILING WITH LINSEED OIL

Number of Operators—One. Description of Operation—Operator dips piece in boiled linseed oil and places in rack to drain and dry over night. Apparatus and Equipment Used—Tank of boiled linseed oil and draining rack. Production—990 per 8-hr. day.

OPERATION 13½. CUTTING FOR CLIPS

Transformation—Fig. 2146. Machine Used—Special machine, Fig. 2147. Number of Operators per Machine—One. Work-Holding Devices—Fig. 2148. Cutting Tools—Fig. 2149. Average Life of Tool Between Grindings—1000 pieces. Gages—Fig. 2150. Production—1232 per 8-hr. day.

OPERATION 13¾. ASSEMBLING CLIPS

Transformation—Fig. 2151. Number of Operators—One. Description of Operation—The clips are small pieces formed of sheet steel; they are slipped into place by hand, and fitted in when necessary. Production—1760 per 8-hr. day.

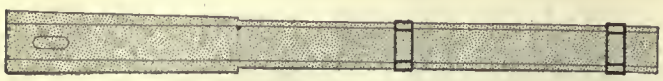

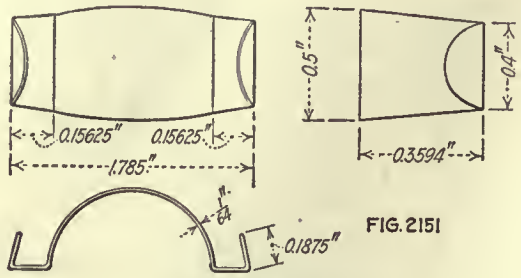

FIG. 2151

OPERATION 13¾

OPERATION 14. OILING WITH COSMOLINE

Number of Operators—One. Description of Operation—With a brush the operator coats with cosmoline the spots on the guard that touch the barrel; they are the butt end of the guard and each clip. Production—5280 per 8-hr. day.

The Bayonet

When we consider that the bayonet, beyond the hilt or guard, is simply a heavy knife, it seems clear that it should be made by the same methods used in making knives or cleavers. They should be forged, ground and tempered, which gives sufficient accuracy, as they fit nothing but the scabbard. But there is no good reason for milling the blade or holding it to close limits.

THERE are three kinds of bayonets made for the United States Army—the knife, or regular, bayonet and two bolo bayonets, the large and small sizes, which were developed for the native troops in the Philippine Islands. These correspond closely to the famous bolo knife, which, like the Cuban machete, is used as a knife for cutting underbrush and firewood as well as a weapon for fighting. The regular bayonet has a comparatively slender blade, as shown in Fig. 2152, and is machined all over. The handle grip is held to close limits for proper attachment to the end of the barrel and the stud on the upper band. The operations on the straight blade follow:

0. Cutting off stock
A. Blocking from bar
B. Drawing
C. Dropping and hot-trimming
E. Annealing
F. Pickling

Copyright, 1917, McGraw-Hill Publishing Co., Inc.

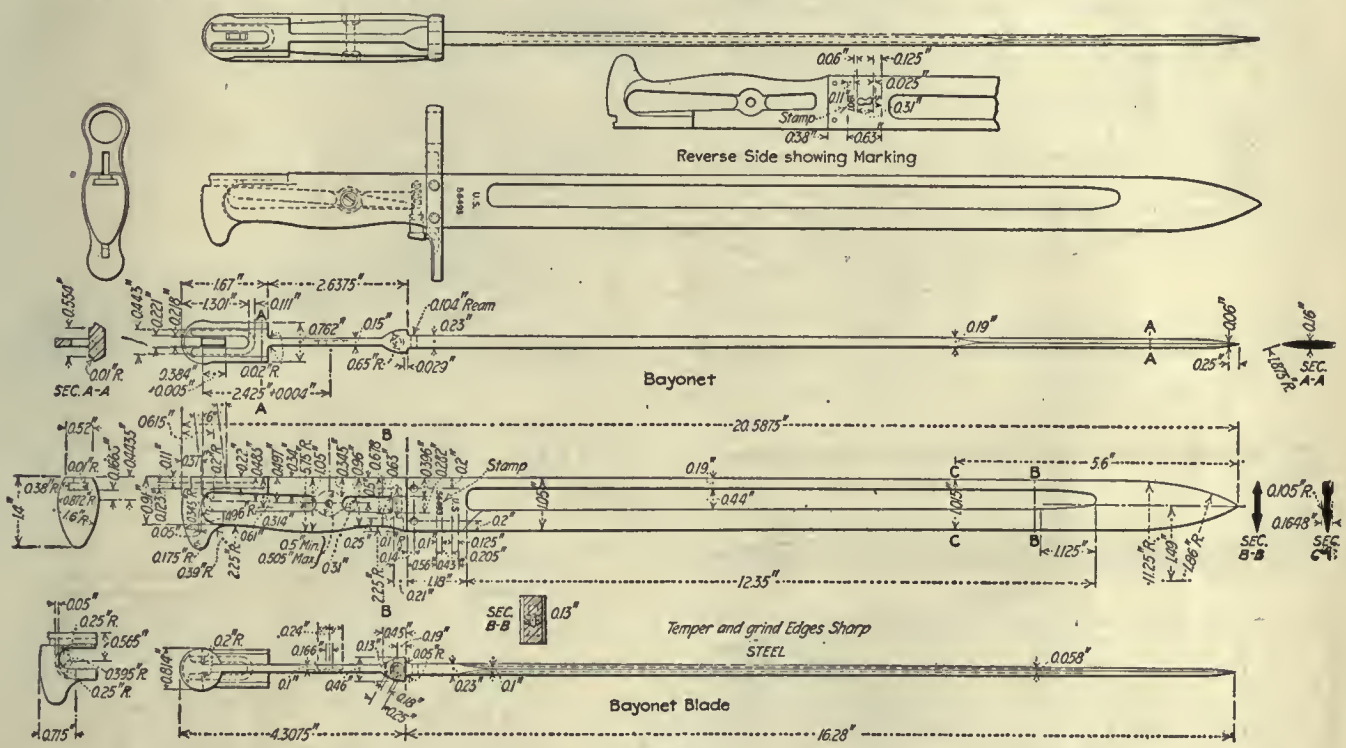

FIG. 2152

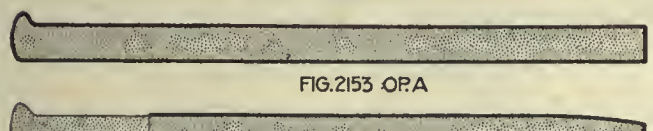

FIG. 2153 OP. A

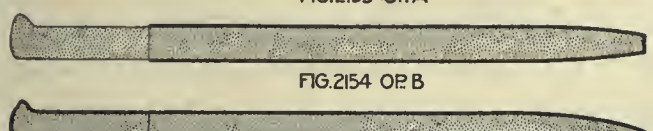

FIG. 2154 OP. B

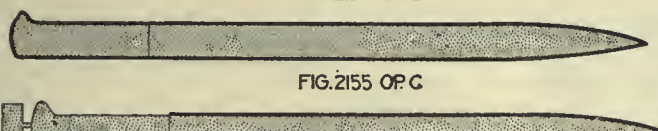

FIG. 2155 OP. C

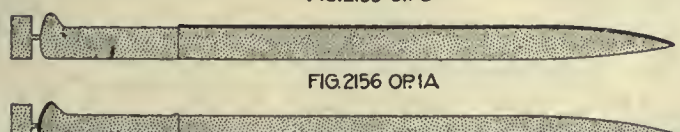

FIG. 2156 OP. 1A

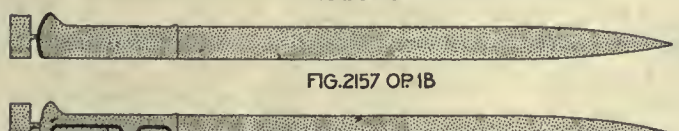

FIG. 2157 OP. 1B

FIG. 2158

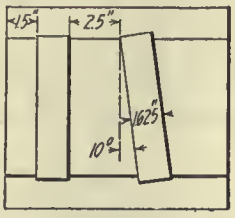

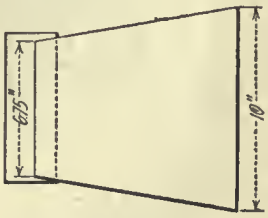

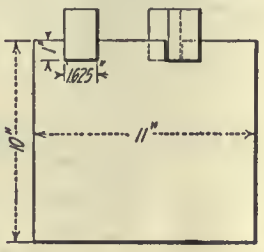

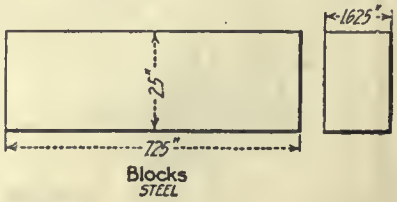

FIG. 2159

OPERATION D

D. Trimming bayonet-catch slots
1. Straightening forging
1-A. Correcting
1-B. Grinding pommel
2-3. Milling back and edge
AA. Removing burrs left by operation 2
4-5. Milling side of tang
5-A. Burring
25. Hand-milling front of bolster
7. Milling edges of point
8. Milling bevel and groove
8-A. Filing to match
9. Milling sides of point
9-A. Straightening
20. Milling sides of pommel

20-A. Burring
10. Profiling right side of tang, upper cut
11. Profiling left side of tang, upper cut
12. Profiling right side of tang, under cut
13. Profiling left side of tang, under cut
14. Milling slot for band lug, roughing
15. Profiling slot for band lug to finish
16. Profiling slot for band lug, under cut
18. Drilling and bottoming scabbard-catch hole
22. Profiling slot for bayonet catch
19. Punching for hook of bayonet catch
28. Hand-milling groove in tang
GG. Removing burrs left by operation 28
26. Drilling rivet and screw holes
27. Counterboring for bayonet catch

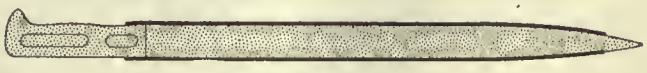

FIG. 2160

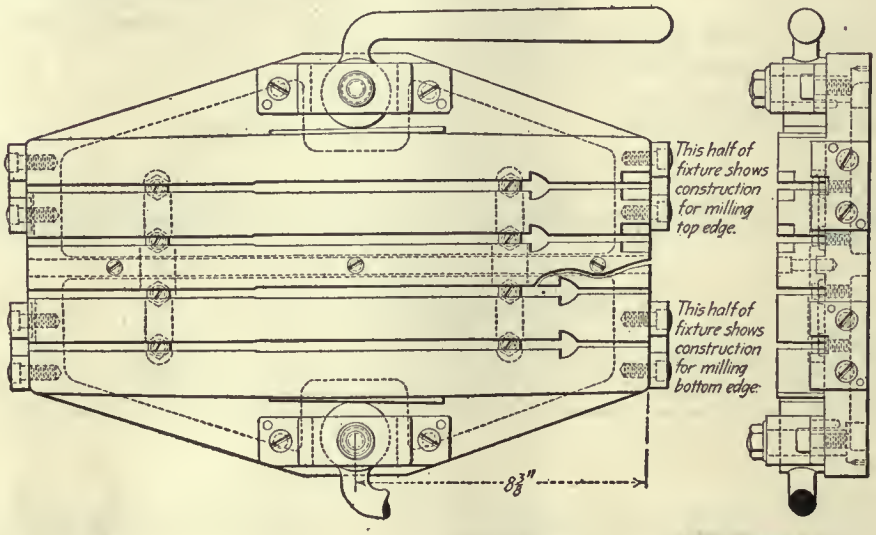

FIG. 2161

OPERATION 2 & 3

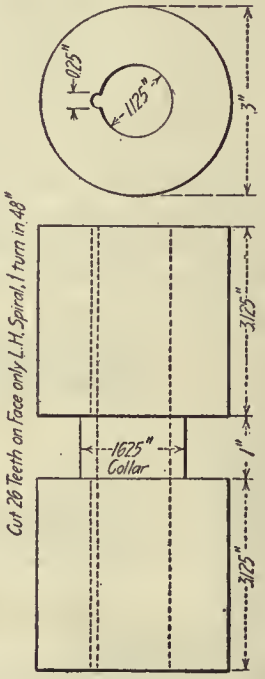

FIG. 2162

FIG. 2163

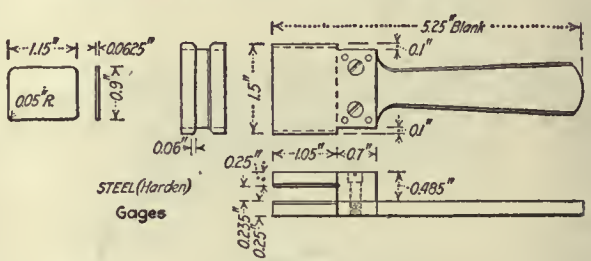

FIG. 2165

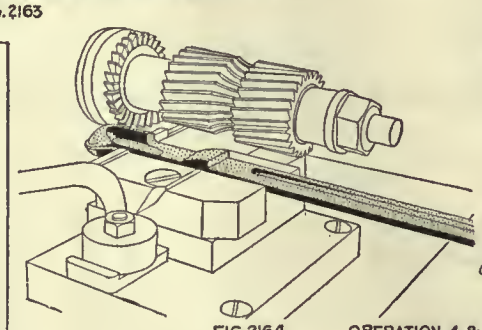

FIG. 2164

OPERATION 4 & 5.

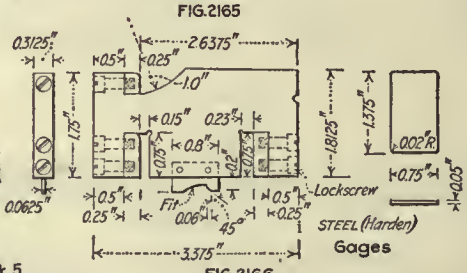

FIG. 2166

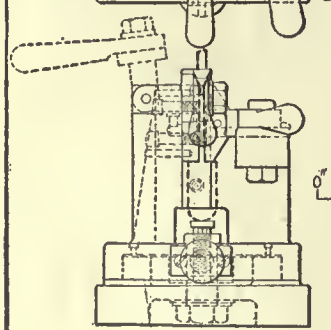

FIG. 2168

FIG. 2167

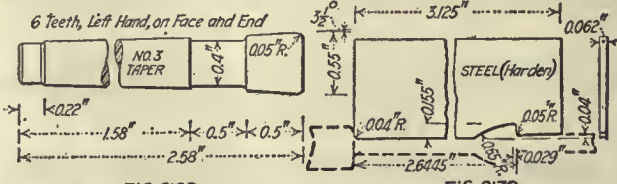

FIG. 2169

FIG. 2170

OPERATION 25

26-A. Burring
24. Milling lower edge of tang
24-A. Burring
31. Profiling end and under side of pommel
33. Stamping U. S. and "ball and flame"
33-A. Reaming and pressing
34. Stamping serial number
I. Hardening
M. Drawing to temper
J. Straightening
K. Grinding to finish
35. Polishing blade (roughing) and tang to finish
36. Reaming rivet holes in guard and blade, countersinking rivet and scabbard-catch holes and assembling with guard
37. Riveting and burring
38. Polishing edge of guard
39. Browning guard and tang of blade
40. Polishing blade to finish
41. Assembling with bayonet and scabbard catches and grip
42. Third polishing

OPERATION 0. CUTTING OFF STOCK

Number of Operators—One. Description of Operation—Cutting the bar in half. Apparatus and Equipment Used—Hilies No. 2 stock shears. Production—700 pieces per hr.

OPERATION A. BLOCKING FROM BAR

Transformation—Fig. 2153. Number of Operators—One. Description of Operation—Blocking or shaping handle from bar; blade is left about 3¼ in. long from the tang, which is drawn to length in next forging operation. Apparatus and Equipment Used—Billings & Spencer 400-lb. drop hammer. Production—50 pieces per hr.

OPERATION B. DRAWING

Transformation—Fig. 2154. Number of Operators—One. Description of Operation—Drawing out block to proper length. Apparatus and Equipment Used—Bradley 60-lb. helve hammer. Production—35 pieces per hr.

OPERATION C. DROPPING AND HOT-TRIMMING

Transformation—Fig. 2155. Number of Operators—One. Description of Operation—Dropping to finish and hot-trimming; after trimming, it is given two or three blows under the drop at the same heat; this leaves a slight flash, which is ground off in the next operation. Apparatus and Equipment Used—Billings & Spencer 1400-lb. drop hammer and Bliss press. Production—40 pieces per hr.

OPERATION E. ANNEALING

Number of Operators—One. Description of Operation—Packed in iron pots with powdered charcoal, heated to 850 deg. C. (1562 deg. F.) and left over night to cool. Apparatus and Equipment Used—Brown & Sharpe annealing furnace, oil burners, cast-iron pots and powdered charcoal.

OPERATION F. PICKLING

Number of Operators—One. Description of Operation—Placed in wire baskets and put in the pickling solution, which consists of 1 part sulphuric acid to 9 parts water, and left in this from 10 to 12 min. Apparatus and Equipment Used—Wire baskets, wooden pickling tanks and hand hoist.

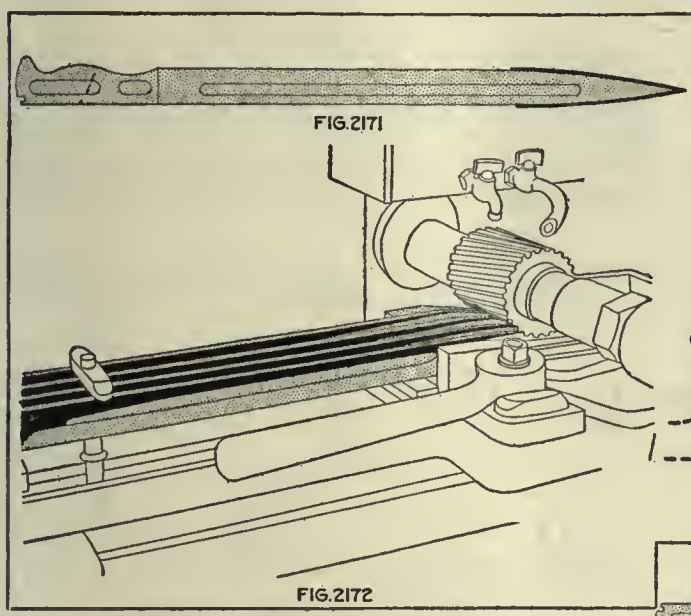
FIG. 2172

FIG. 2171

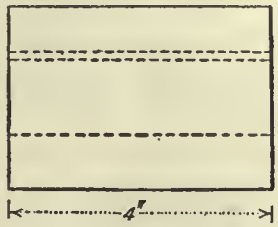

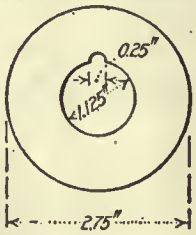

2 Mills in Set
FIG. 2173

OPERATION 7

FIG. 2174

FIG. 2175

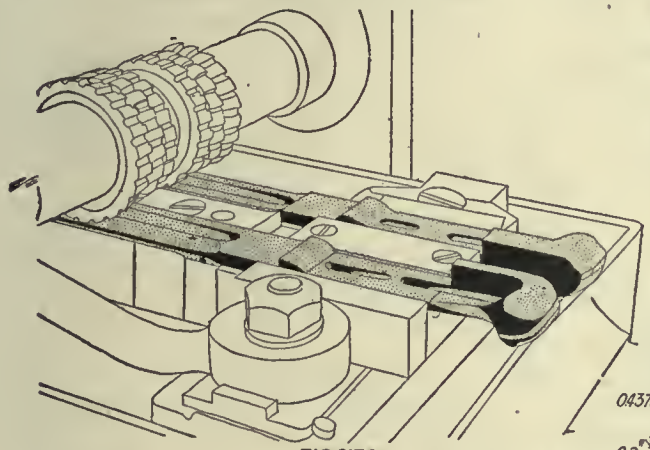
FIG. 2176

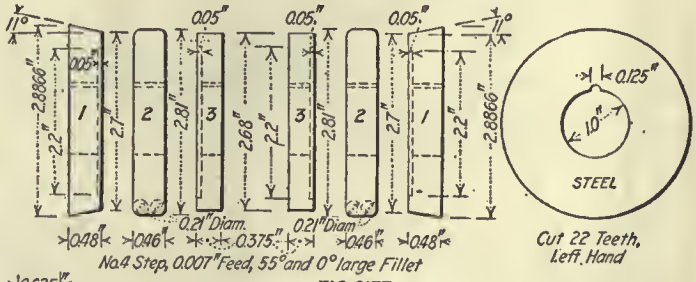

FIG. 2177

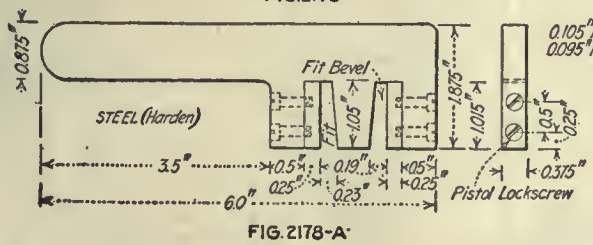

FIG. 2178-A

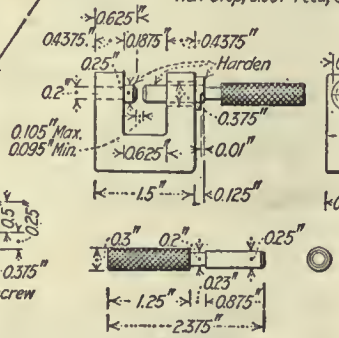

FIG. 2178-B

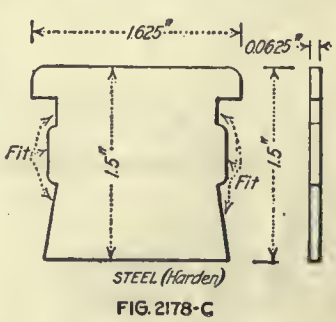

FIG. 2178-C

OPERATION 8

OPERATION D. TRIMMING BAYONET-CATCH SLOTS

Transformation—Fig. 2158. Machine Used—Perkins No. 19, 1½-in. stroke. Number of Operators per Machine—One. Punches and Punch Holders—Square shank. Dies and Die Holders—In shoe, by setscrew. Stripping Mechanism—Two pieces of stock screwed to side of shoe. Average Life of Punches and Dies—15,000 pieces. Production—350 pieces per hr.

OPERATION 1. STRAIGHTENING THE FORGING

Number of Operators—One. Description of Operation—Straightening after forging and trimming, previous to machining. Apparatus and Equipment Used—Cast-iron block, Fig. 2159, hammer and straight-edge. Production—45 pieces per hr.

OPERATION 1-A. CORRECTING

Transformation—Fig. 2156. Number of Operators—One. Description of Operation—Grinding flash on cutting edge. Apparatus and Equipment Used—Grindstone. Production—120 pieces per hr.

OPERATION 1-B. GRINDING POMMEL

Transformation—Fig. 2157. Number of Operators—One. Description of Operation—Breaking off end from pommel and grinding pommel end. Apparatus and Equipment Used—Hammer and grindstone. Production—125 pieces per hr.

OPERATIONS 2 AND 3. MILLING BACK AND EDGES

Transformation—Fig. 2160. Machine Used—Pratt & Whitney No. 2 Lincoln miller. Number of Machines per Operator—Four. Work-Holding Devices—Vise jaws hold four at a cut, Fig. 2161; two are held in each position. Tool-Holding Devices—Standard arbor. Cutting Tools—Spiral mills, Fig. 2162. Number of Cuts—One. Cut Data—70 r.p.m.; ⅝-in. feed. Coolant—Compound, ¼-in. stream. Average Life of Tool Between Grindings—5000 pieces. Gages—None. Production—20 pieces per hr., one machine.

OPERATION AA. REMOVING BURRS LEFT BY OPERATIONS 2 AND 3

Number of Operators—One. Description of Operation—Removing burrs left by operations 2 and 3. Apparatus and Equipment Used—File. Production—Grouped with operations 2 and 3.

OPERATIONS 4 AND 5. MILLING SIDE OF TANG

Transformation—Fig. 2163. Machine Used—Pratt & Whitney No. 2 Lincoln miller. Number of Machines per Operator—Five. Work-Holding Devices—Held in vise jaws, Fig. 2164. Tool-Holding Devices—Standard arbor. Cutting Tools—Gang of forward cutters (see Fig. 2164). Number of cuts—One. Cut Data—70 r.p.m.; ⅝-in. feed. Coolant—Cutting oil, ⅛-in. stream. Average Life of Tool Between Grindings—5000 pieces. Gages—Fig. 2165, thickness of blade; Fig. 2166, form and thickness of tang. Production—25 pieces per hr.

OPERATION 5-A. BURRING

Number of Operators—One. Description of Operation—Burring from operations 4 and 5. Apparatus and Equipment Used—File. Production—Grouped with operations 4 and 5.

OPERATION 25. HAND-MILLING FRONT OF BOLSTER

Transformation—Fig. 2167. Machine Used—Whitney hand miller. Number of Operators per Machine—One. Work-Holding Devices—Indexing fixture, work held by jaws, Fig. 2168. Tool-Holding Devices—Taper shank. Cutting Tools—End-milling cutter, Fig. 2169. Number of Cuts—Two. Cut Data—450 r.p.m.; hand feed. Coolant—None. Average Life of Tool Between Grindings—5000 pieces. Gages—Fig. 2170. Production—125 pieces per hr.

OPERATION 7. MILLING EDGES OF POINT

Transformation—Fig. 2171. Machine Used—Pratt & Whitney No. 2 Lincoln miller. Number of Machines per Operator—Five. Work-Holding Devices—Held in block clamped by vise jaws, on a bridge-milling fixture, Fig. 2172. Tool-Holding Devices—Standard arbor. Cutting Tools—Milling cutters, Fig. 2173. Number of Cuts—Two. Cut Data—70 r.p.m.; ⅝-in. feed. Coolant—Cutting oil, ⅛-in. stream. Average Life of Tool Between Grindings—5000 pieces. Gages—Fig. 2174, length of point from bolster and shape of point. Production—40 pieces per hr. per machine.

OPERATION 8. MILLING BEVEL AND GROOVE

Transformation—Fig. 2175. Machine Used—Pratt & Whitney No. 2 Lincoln miller. Number of Machines per Operator—Five. Work-Holding Devices—Held in a block, clamped by vise jaws; two at a time, one each way, Fig. 2176. Tool-Holding Devices—Standard arbor. Cutting Tools—Gang of milling cutters, Fig. 2177. Number of Cuts—Two. Cut Data—60 r.p.m.; ⅝-in. feed. Coolant—Compound, ¼-in. stream. Average Life of Tool Between Grindings—5000 pieces. Gages—Fig. 2178; A, angle of blade; B, thickness at bottom of groove; C, contour. Production—40 pieces per hr. per machine.

OPERATION 8-A. FILING TO MATCH

Number of Operators—One. Description of Operation—Blending cuts together. Apparatus and Equipment Used—File. Production—75 pieces per hr.

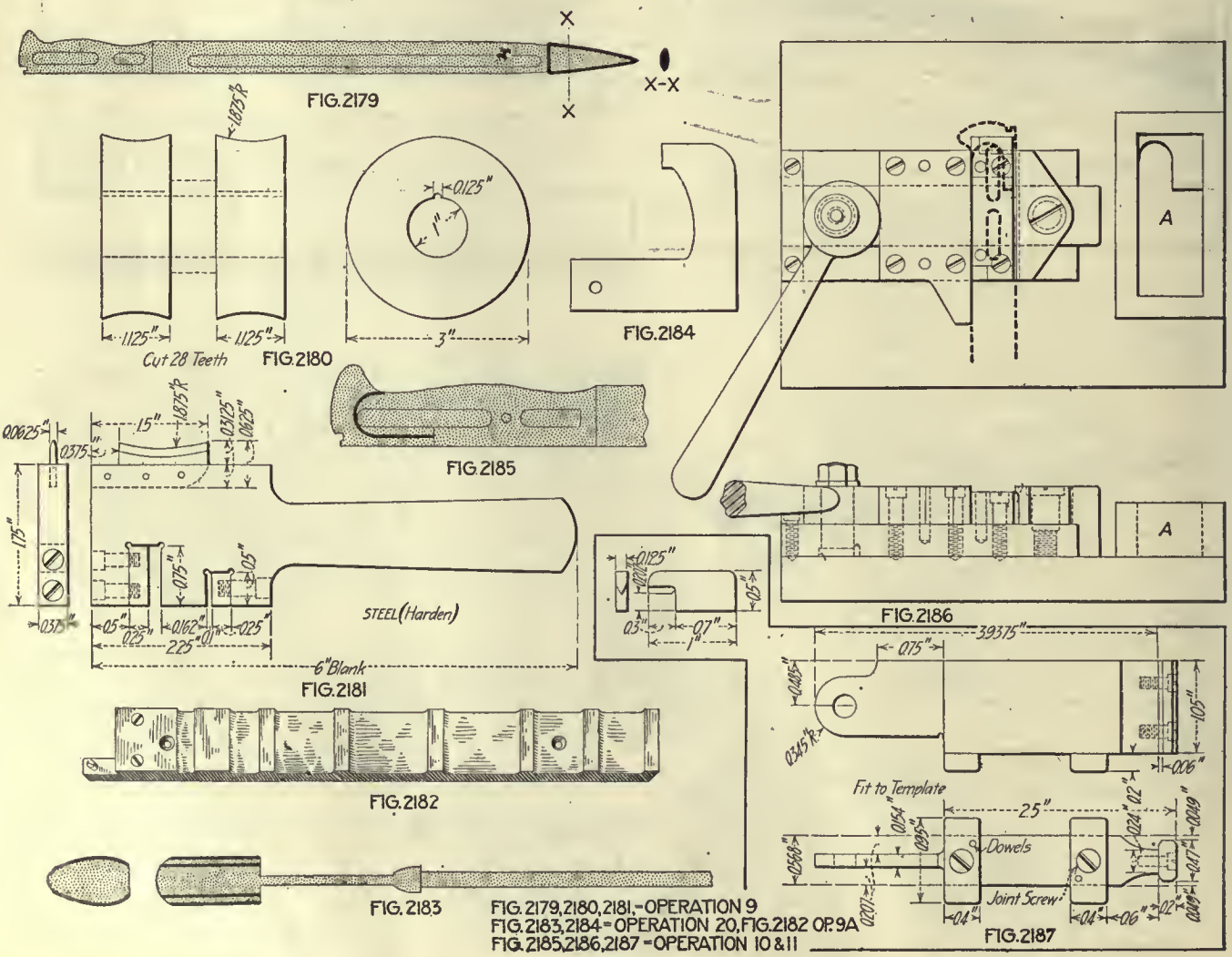

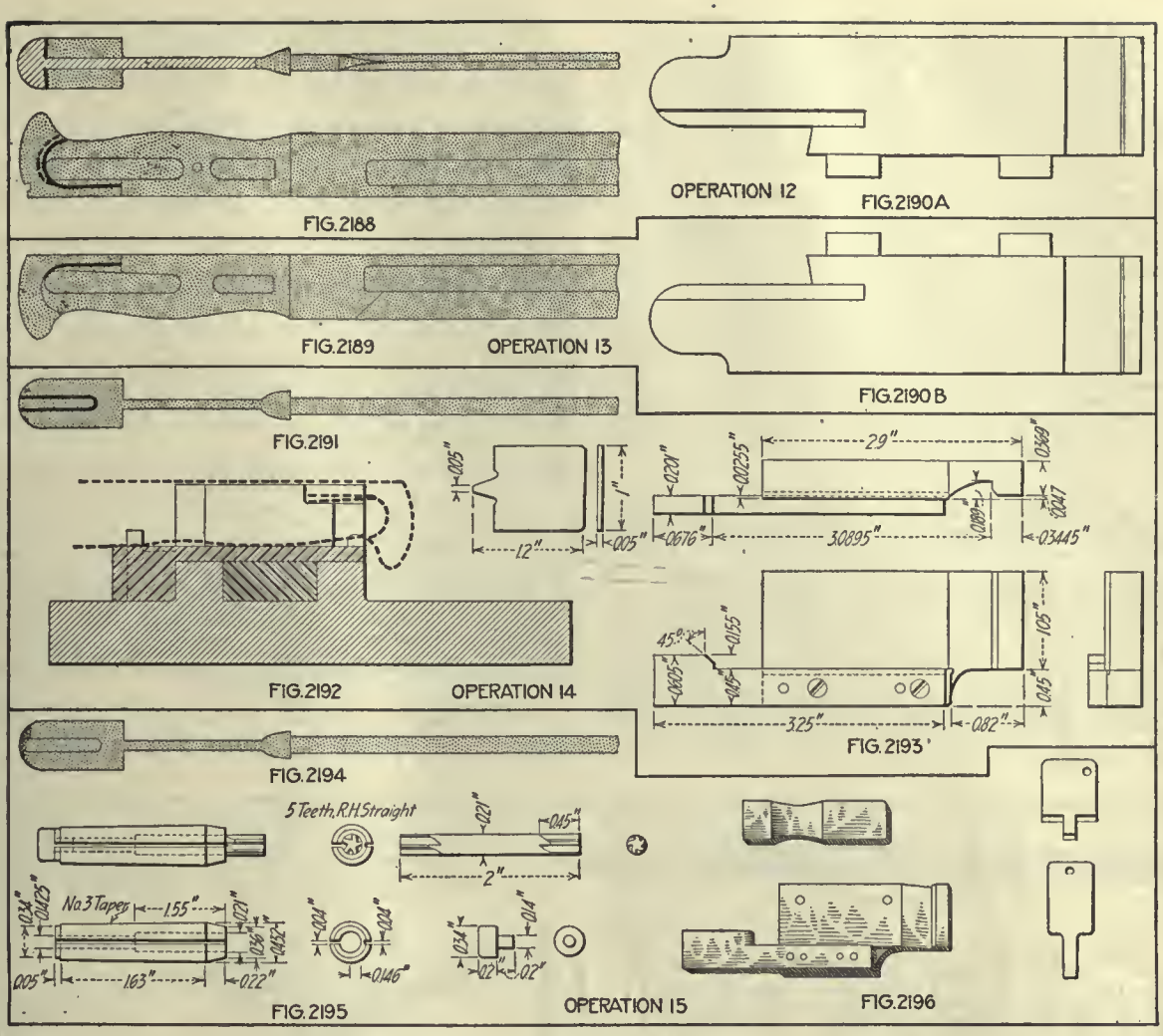
FIG. 2188
OPERATION 12
FIG. 2190A
FIG. 2189
OPERATION 13
FIG. 2190 B
FIG. 2191
FIG. 2192
OPERATION 14
FIG. 2193
FIG. 2194
5 Teeth, R.H. Straight
No. 3 Taper
FIG. 2195
OPERATION 15
FIG. 2196

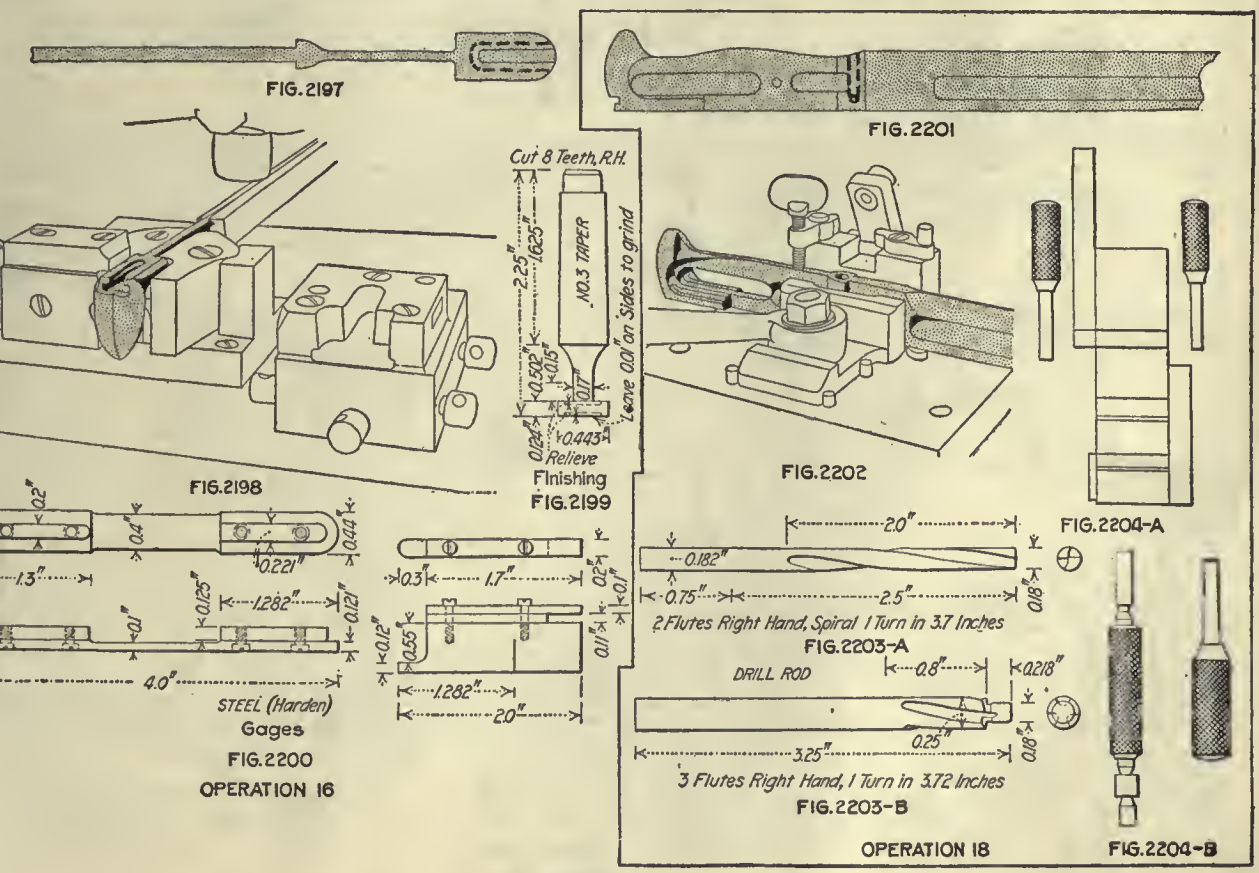
FIG. 2197
FIG. 2201
Cut 8 Teeth, R.H.
No. 3 TAPER
Leave 0.01" on Sides to grind
0.443"
Relieve
Finishing
FIG. 2199
FIG. 2202
FIG. 2204-A
FIG. 2198
STEEL (Harden)
Gages
FIG. 2200
OPERATION 16
2 Flutes Right Hand, Spiral 1 Turn in 3.7 Inches
FIG. 2203-A
DRILL ROD
3 Flutes Right Hand, 1 Turn in 3.72 Inches
FIG. 2203-B
OPERATION 18
FIG. 2204-B

OPERATION 9. MILLING SIDES OF POINT

Transformation—Fig. 2179. Machine Used—Pratt & Whitney No. 2 Lincoln miller. Number of Machines per Operator—Five. Work-Holding Devices—Held in block, clamped by vise jaws, same as operation 8. Tool-Holding Devices—Standard arbor. Cutting Tools—Milling cutters, Fig. 2180. Number of Cuts—Two. Cut Data—70 r.p.m.; §-in. feed. Coolant—Compound, ¼-in. stream. Average Life of Tool Between Grindings—5000 pieces. Gages—Fig. 2181, curve of sides. Production—40 pieces per hr. per machine.

OPERATION 9-A. STRAIGHTENING

Number of Operators—One. Description of Operation—Straightening after milling. Apparatus and Equipment Used—Cast-Iron block, hammer and straight-edge. Gages—Fig. 2182; a plate with ridges or spots that show whether blade is straight. Production—80 pieces per hr.

OPERATION 20. MILLING SIDES OF POMMEL

Transformation—Fig. 2183. Machine Used—Pratt & Whitney No. 2 Lincoln miller. Number of Machines per Operator—Five. Work-Holding Devices—Held in block, clamped by cam-operated vise jaws; similar to other previously shown. Tool-Holding Devices—Standard arbor. Cutting Tools—Milling cutters. Number of Cuts—One. Cut Data—70 r.p.m.; §-in. feed. Coolant—Cutting oil, ⅛-in. stream. Average Life of Tool Between Grindings—5000 pieces. Gages—Fig. 2184, form. Production—40 pieces per hr. per machine.

OPERATION 20-A. BURRING

Number of Operators—One. Description of Operation—Removing burrs from operation 20. Apparatus and Equipment Used—File. Production—300 pieces per hr.

OPERATION 10. PROFILING RIGHT SIDE OF TANG UPPER CUT. OPERATION 11. PROFILING LEFT SIDE OF TANG, UPPER CUT

Transformation—Fig. 2185. Machine Used—Pratt & Whitney No. 2 profiler. Number of Operators per Machine—One. Work-Holding Devices—Held on block clamped by vise jaws, Fig. 2186; profiling form at A. Tool-Holding Devices—Taper shank. Cutting Tools—Profiling cutter. Number of Cuts—Two. Cut Data—1200 r.p.m.; hand feed. Coolant—Compound, ¼-in. stream. Average Life of Tool Between Grindings—250 pieces. Gages—Fig. 2187, form, from edge of handle. Production—40 pieces per hr.

OPERATION 12. PROFILING RIGHT SIDE OF TANG. UNDER CUT. OPERATION 13. PROFILING LEFT SIDE OF TANG, UNDER CUT

Transformation—Figs. 2188 and 2189. Machine Used—Pratt & Whitney No. 2 profiler. Number of Operators per Machine—One. Work-Holding Devices—Held in block, clamped by vise jaws, same as before. Tool-Holding Devices—Taper shank. Cutting Tools—Undercut profile cutter. Number of Cuts—Two. Cut Data—1200 r.p.m.; hand feed. Coolant—Cutting oil, ¼-in. stream. Average Life of Tool Between Grindings—200 pieces. Gages—Fig. 2190; A and B, right and left, for under cut. Production—40 pieces per hr.

OPERATION 14. MILLING SLOT FOR HAND LUG, ROUGHING

Transformation—Fig. 2191. Machine Used—Pratt & Whitney No. 2 Lincoln miller. Number of Machines per Operator—Five. Work-Holding Devices—Held by cam-operated, double vise jaws, Fig. 2192. Tool-Holding Devices—Standard arbor. Cutting Tools—A pair of milling cutters, 2.25 in. in diameter; 0.202 thick; 24 teeth, on face and sides. Number of Cuts—One. Cut Data—70 r.p.m.; §-in. feed. Coolant—Cutting oil. Average Life of Tool Between Grindings—5000 pieces. Gages—Fig. 2193, length and width of slot. Production—40 pieces per hour per machine. Note—Same style fixture as used in operation 20.

OPERATION 15. PROFILING SLOT FOR BAND LUG TO FINISH

Transformation—Fig. 2194. Machine Used—Pratt & Whitney No. 2 profiler. Number of Operators per Machine—One. Work-Holding Devices—Held by vise with formed jaws, similar to previous operations. Tool-Holding Devices—Taper shank. Cutting Tools—End-milling cutters, Fig. 2195. Number of Cuts—One. Cut Data—1200 r.p.m.; hand feed. Coolant—Cutting oil, ¼-in. stream. Average Life of Tool Between Grindings—250 pieces. Gages—Fig. 2196, width and length. Production—35 pieces per hr.

OPERATION 16. PROFILING SLOT FOR BAND LUG, UNDER CUT

Transformation—Fig. 2197. Machine Used—Pratt & Whitney No. 2 profiler. Number of Operators per Machine—One. Work-Holding Devices—Held by special vise jaws, Fig. 2198, profile form at right. Tool-Holding Devices—Taper shank.

FIG. 2205

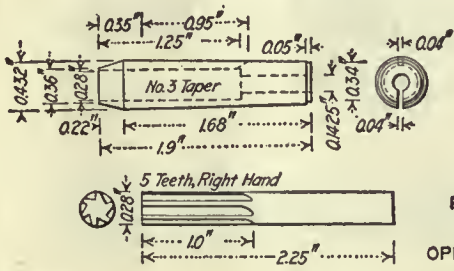

FIG. 2207 OPERATION 22

FIG. 2208

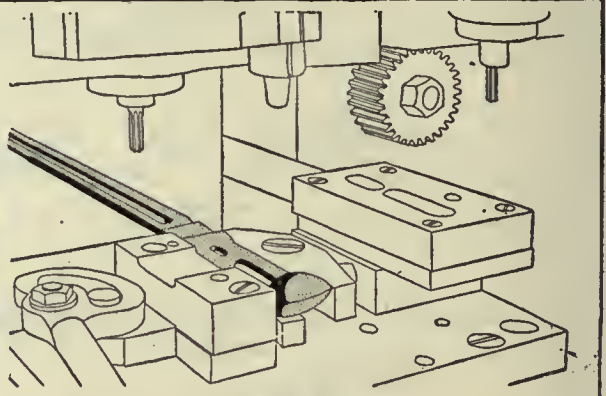
FIG. 2206

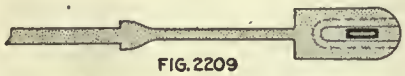
FIG. 2209

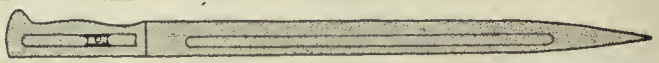
FIG. 2212

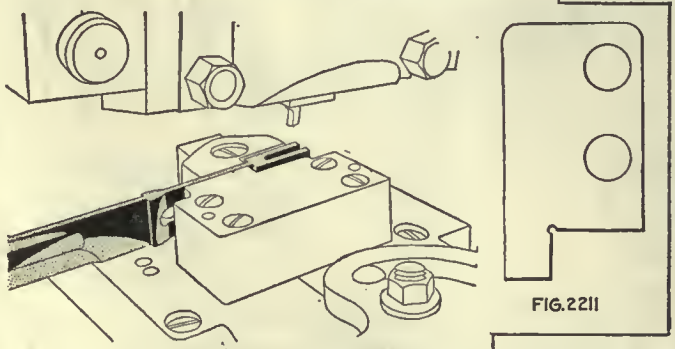
FIG. 2210 OPERATION 17

FIG. 2211

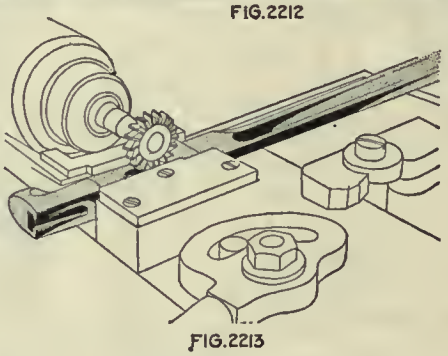
FIG. 2213

FIG. 2215

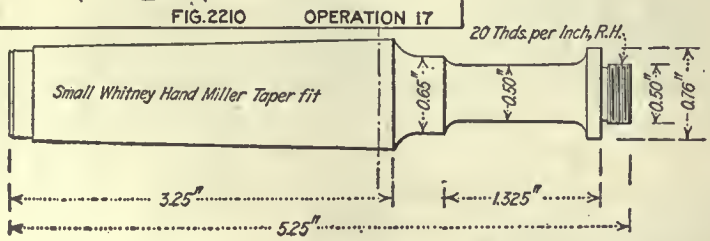

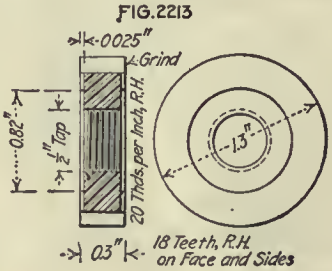

FIG. 2214 OPERATION 28

Cutting Tools—Undercutting profile cutter, Fig. 2199. Number of Cuts—Two. Cut Data—1200 r.p.m.; hand feed. Coolant—Cutting oil, ¼-in. stream. Average Life of Tool Between Grindings—200 pieces. Gages—Fig. 2200, form and size. Production—35 pieces per hr. Note—Same style fixture used as in operation 15.

OPERATION 18. DRILLING AND BOTTOMING SCABBARD-CATCH HOLE

Transformation—Fig. 2201. Machine Used—Ames 16-in. three-spindle drill. Number of Operators per Machine—One. Work-Holding Devices—Drill jig, Fig. 2202. Tool-Holding Devices—Drill chuck. Cutting Tools—Fig. 2203-A, drill bottoming and counterbore. Number of Cuts—Two. Cut Data—650 r.p.m.; hand feed. Coolant—Cutting oil, ⅛-in. stream. Average Life of Tool Between Grindings—250 pieces. Gages—Fig. 2204; A, location of hole; B, size of hole and counterbore. Production—35 pieces per hr.

OPERATION 22. PROFILING SLOT FOR BAYONET CATCH

Transformation—Fig. 2205. Machine Used—Pratt & Whitney No. 2 profiler. Number of Operators per Machine—One. Work-Holding Devices—Held in block, by vise jaws, Fig. 2206; profile form at right. Tool-Holding Devices—Taper shank. Cutting Tools—Milling cutter and holder, Fig. 2207. Number of Cuts—Two. Cut Data—1200 r.p.m.; hand feed. Coolant—Cutting oil, ¼-in. stream. Average Life of Tool Between Grindings—250 pieces. Gages—Fig. 2208; a pin fits in screw hole, a block in slot and a projection gages from back of handle. Production—20 pieces per hr.

OPERATION 19. PUNCHING FOR HOOK OF BAYONET CATCH

Transformation—Fig. 2209. Machine Used—Snow No. 2, ½-in. stroke. Number of Operators per Machine—One. Punches and Punch Holders—In holder with square shank; punch is 2 in. long, 0.27 in. wide and 0.221 in. thick. Dies and Die Holders—Fig. 2210. Stripping Mechanism—None. Average Life of Punches and Dies—300 pieces. Lubricant—Cutting oil, put on with brush. Gages—Fig. 2211, size of slot. Production—60 pieces per hr. Note—Work held in fixture bolted to bed of press.

OPERATION 28. HAND-MILLING GROOVE IN TANG

Transformation—Fig. 2212. Machine Used—Whitney hand miller. Number of Operators per Machine—One. Work-Holding Devices—Vise jaws, Fig. 2213. Tool-Holding Devices—Taper shank. Cutting Tools—Small milling cutter on threaded arbor, Fig. 2214. Number of Cuts—One. Cut Data—650 r.p.m.; hand feed. Coolant—Cutting oil, ⅛-in. stream. Average Life of Tool Between Grindings—5000 pieces. Gages—Fig. 2215, thickness of web. Production—100 pieces per hour.

OPERATION GG. REMOVING BURRS LEFT BY OPERATION 28

Number of Operators—One. Description of Operation—Removing burrs thrown up by operation 28. Apparatus and Equipment Used—File. Production—400 pieces per hour.

OPERATION 27. COUNTERBORING FOR BAYONET CATCH

Transformation—Fig. 2219. Machine Used—Ames 16-in. single-spindle upright drilling machine. Number of Operators per Machine—One. Work-Holding Devices—Cam-operated drill jig. Tool-Holding Devices—Drill chuck. Cutting Tools—Counterbore, Fig. 2220. Number of Cuts—One. Cut Data—650 r.p.m.; hand feed. Coolant—Cutting oil, ⅛-in. stream. Average Life of Tool Between Grindings—500 pieces. Gages—Fig. 2221, diameter and concentricity of counterbore. Production—120 pieces per hr.

OPERATION 26. DRILLING RIVET AND SCREW HOLES

Transformation—Fig. 2216. Machine Used—Ames 16-in. three-spindle upright drilling machine. Number of Operators per Machine—One. Work-Holding Devices—Drill jig, Fig. 2217; swinging leaf carries drill bushings. Tool-Holding Devices—Drill chuck. Cutting Tools—Twist drills. Number of Cuts—Two. Cut Data—750 r.p.m.; hand feed. Coolant—Cutting oil, ⅛-in. stream. Average Life of Tool Between Grindings—250 pieces. Gages—Fig. 2218, location of rivet holes. Production—40 pieces per hr.

OPERATION 26-A. BURRING

Number of Operators—One. Description of Operation—Burring operation 26-A. Apparatus and Equipment Used—File. Production—300 pieces per hr.

OPERATION 24. MILLING LOWER EDGE OF TANG

Transformation—Fig. 2222. Machine Used—Pratt & Whitney No. 2 Lincoln miller. Number of Machines per Operator—Five. Work-Holding Devices—Work held in vise jaws, same style as in operations 4 and 5. Tool-Holding Devices—Standard arbor. Cutting Tools—Formed milling cutter, Fig. 2223. Number of Cuts—One. Cut Data—70 r.p.m.; ⅝-in. feed. Coolant—Cutting oil, ⅛-in. stream. Average Life of Tool Between Grindings—5000 pieces. Gages—Fig. 83, contour. Production—40 pieces per hr.

OPERATION 24-A. BURRING

Number of Operators—One. Description of Operation—Removing burrs from previous operation. Apparatus and Equipment Used—File. Production—90 pieces per hr.

OPERATION 31. PROFILING END AND UNDER SIDE OF POMMEL

Transformation—Fig. 2225. Machine Used—Pratt & Whitney No. 2 profiler. Number of Operators per Machine—One. Work-Holding Devices—Held in block, by vise jaws, Fig. 2226; profile form at right. Tool-Holding Devices—Taper shank. Cutting Tools—Forward cutter, Fig. 2227. Number of Cuts—One. Cut Data—1200 r.p.m.; hand feed. Coolant—Cutting oil, ¼-in. stream. Average Life of Tool Between Grindings—200 pieces. Gages—Form, Fig. 2228. Production—60 pieces per hr.

OPERATION 33. STAMPING "U. S." AND "BALL AND FLAME"

Machine Used—Stiles No. 2 press. Number of Operators per Machine—One. Punches and Punch Holders—Round

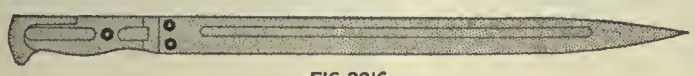

FIG. 2216

FIG. 2219

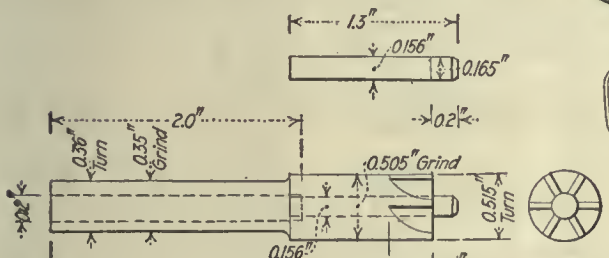

FIG. 2220

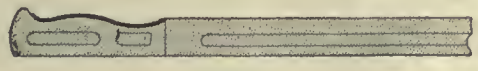

FIG. 2222

FIG. 2216, 2217 & 2218 OPERATION 26
" 2219, 2220 & 2221 " 27
" 2222, 2223 & 2224 " 24

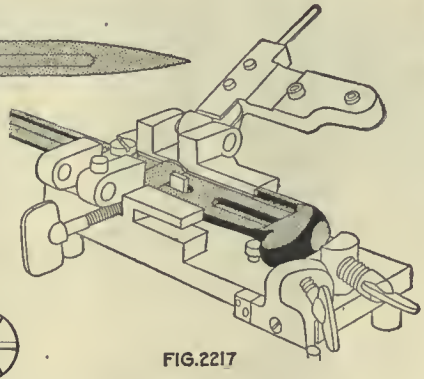

FIG. 2217

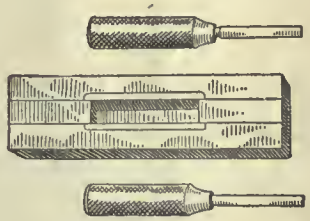

FIG. 2218

FIG. 2221

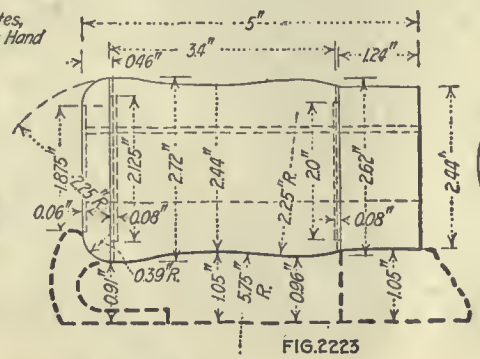

FIG. 2223

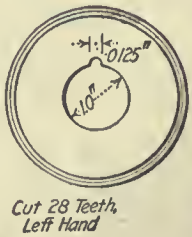

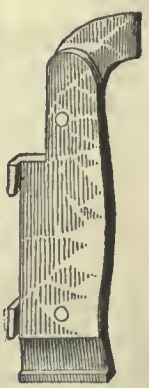

FIG. 2224

FIG.2225

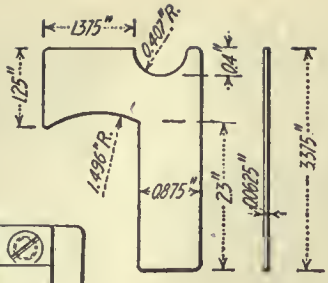

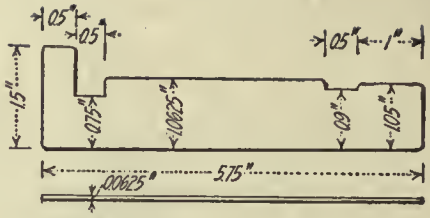

STEEL (Harden)

FIG.2228

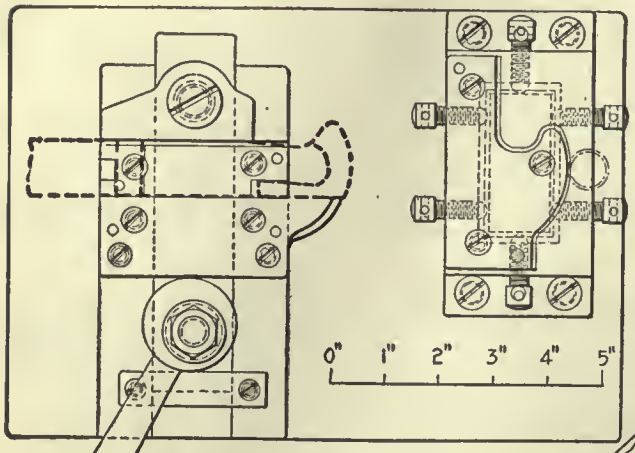

FIG.2226 OPERATION 31

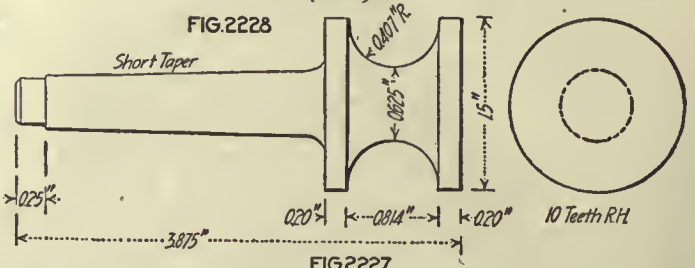

FIG.2227

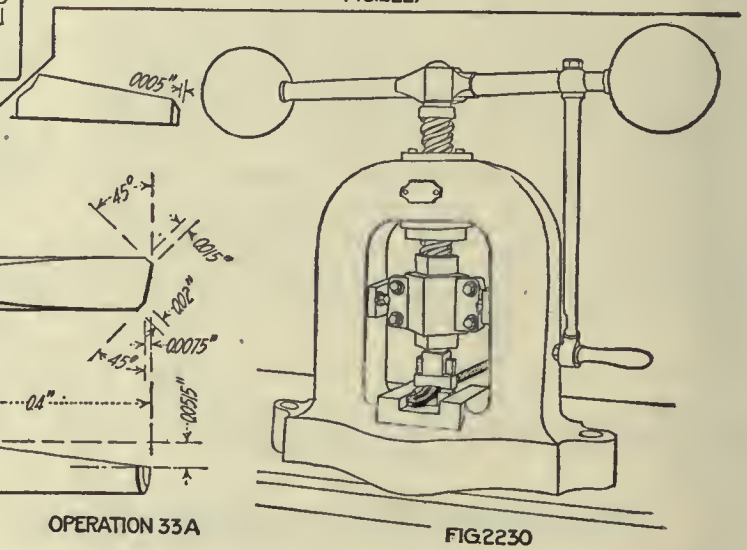

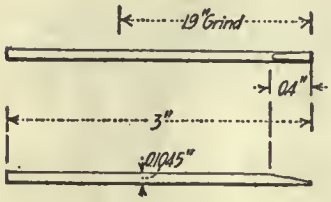

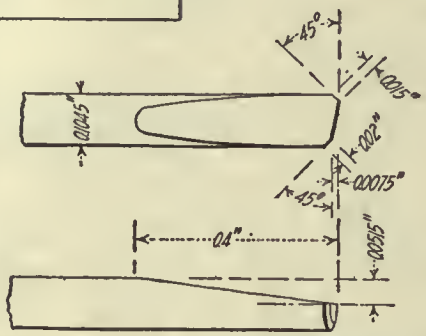

FIG.2229 OPERATION 33A

FIG.2230

shank. Dies and Die Holders—Fixture bolted to bed of press; stamps are set in die. Production—350 pieces per hr. Note—Dies stamp "U. S." on one side and "ball and flame" on the other.

OPERATION 33-A. REAMING AND PRESSING

Number of Operators—One. Description of Operation—Straightening blade for stamping operation and reaming pin holes after stamping. Apparatus and Equipment Used—Hand press, Fig. 2230; bench lathe and reamer, Fig. 2229. Gages—Plug. Production—350 pieces per hr.

OPERATION 34. STAMPING SERIAL NUMBER

Transformation—Fig. 2231, number at A. Number of Operators—One. Description of Operation—Stamping serial number by using special stamp holder. Apparatus and Equipment Used—Fixture for holding work and spacing letters; hand stamps and hammer; slide A carries stamp at B and is advanced by ratchet with latch C, Fig. 2232. Production—120 pieces per hr.

OPERATION 1. HARDENING

Description of Operation—Bayonet blades are hardened in a semi-muffle oil-burning furnace, laid on the backs with the cutting edge up; they are heated to 800 deg. C. (1472 deg. F.) and quenched in sperm oil; they are first dipped slowly at a slight angle to the required depth and then hung in a rack at the side of the tank, as in Fig. 93-A; they hang here until the rack is full, then the first is removed, and so on; the oil is cooled by the surrounding water, being kept at about 80 deg. F. Production—About 100 blades per hr.

OPERATION M. DRAWING TO TEMPER

Description of Operation—The temper is drawn in a bath of niter to a temperature of 450 deg. C. (842 deg. F.) and quenched in water.

OPERATION J. STRAIGHTENING

Number of Operators—One. Description of Operation—Straightening after hardening; the blades are straightened by bending as required, using the apparatus shown in Fig. 2234, and tested by the eye; they are heated over a flame in a small muffle furnace just sufficient to bend without breaking; long bends are removed by placing over blocks A and B and using the rod F with one end under the loop D; edge bending is done by the foot lever E with the bayonet laid edge up on blocks B and C; when twisting is necessary, the fixed post G and the hand-wrench twister H are used. The table is mounted on a bench. Apparatus and Equipment Used—Special straightening device, Fig. 93-B. Production—35 pieces per hr.

OPERATION K. GRINDING TO FINISH

Number of Operators—One. Description of Operation—Grinding point and shaping edge. Apparatus and Equipment Used—Grindstones, mounted as shown in Fig. 2235. Production—15 pieces per hour.

OPERATION 35. POLISHING BLADE (ROUGHING) AND TANG TO FINISH

Number of Operators—One. Description of Operation—Polishing blade (rough) and tang to finish. Apparatus and Equipment Used—Polishing jack and wheel. Production—4 per hr.

OPERATION 36. REAMING RIVET HOLES IN GUARD AND BLADE, COUNTERSINKING RIVET AND SCABBARD-CATCH HOLES AND ASSEMBLING WITH GUARD

Number of Operators—One. Description of Operation—Reaming rivet holes and countersinking after guard is assembled to blade. Apparatus and Equipment Used—Reamer, Fig. 2236; countersink, Fig. 2237; and bench lathe. Production—40 pieces per hr.

OPERATION 37. RIVETING AND BURRING

Number of Operators—One. Description of Operation—Riveting guard and blade together, as in Fig. 2238. Apparatus and Equipment Used—Hammer and file. Production—70 pieces per hr.

OPERATION 38. POLISHING EDGE OF GUARD

Number of Operators—One. Description of Operation—Polishing edges of guard. Apparatus and Equipment Used—Polishing jack and wheel. Production—35 pieces per hr.

OPERATION 39. BROWNING GUARD AND TANG OF BLADE

Number of Operators—One. Description of Operation—Same as other brownings, except care is taken to keep the blade bright; same apparatus as in other browning operations.

OPERATION 40. POLISHING BLADE TO FINISH

Number of Operators—One. Description of Operation—Finish-polishing blade. Apparatus and Equipment Used—Wheel and polishing jack. Production—5 pieces per hour.

OPERATION 41. ASSEMBLING WITH BAYONET AND SCABBARD CATCHES AND GRIP

Number of Operators—One. Description of Operation—Assembling scabbard and catch and grip (see Fig. 2152). Apparatus and Equipment Used—Screwdriver, pinchers and hammer. Production—40 pieces per hr.

OPERATION 42. THIRD POLISHING

Number of Operators—One. Description of Operation—Final polishing all over blade. Equipment and Apparatus Used—Same apparatus as other polishing. Production—About the same as for second polishing.

FIG.2231

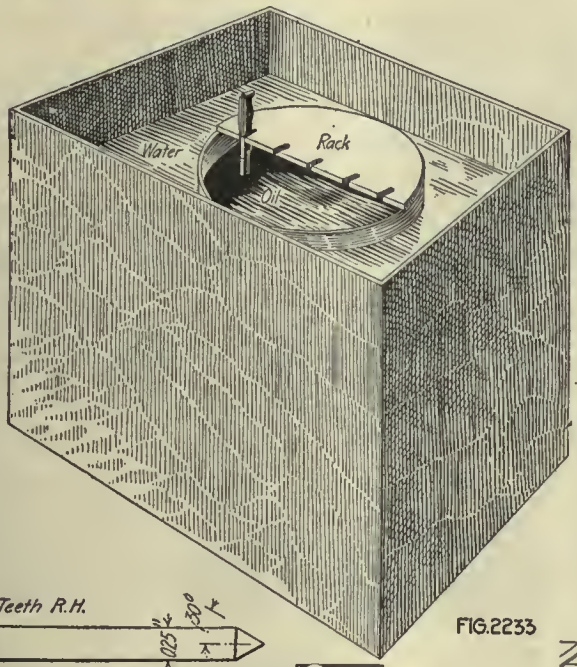

FIG.2233

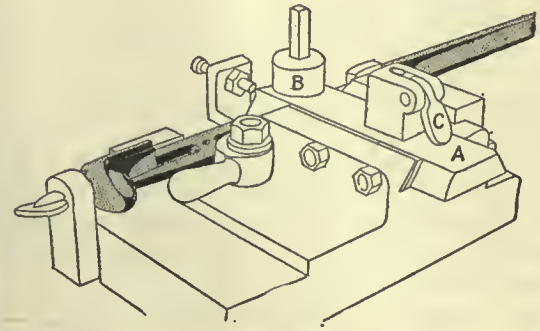

FIG.2232

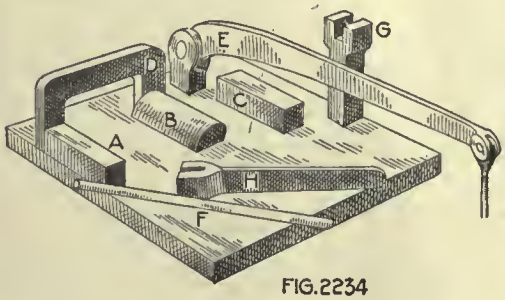

FIG.2234

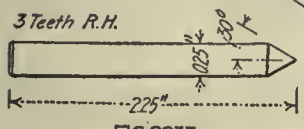

FIG.2237

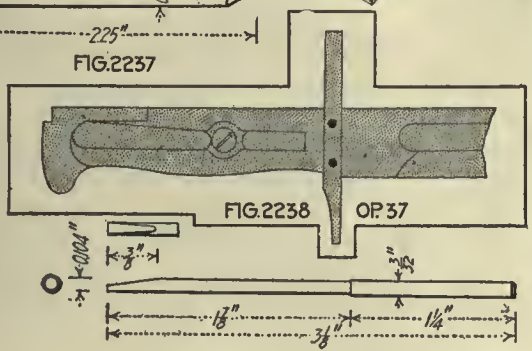

FIG.2238

FIG.2236

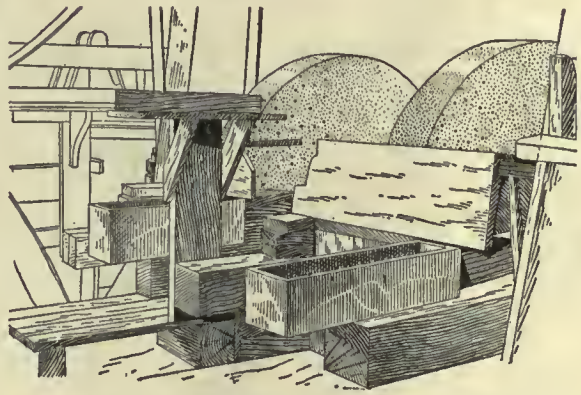

OPERATION 34

FIG.2235

Bayonet Catch, Grip, Guard, Scabbard-Catch, Etc.

These small parts require many machining operations and, being small, they are not easy to hold for machining, especially when the cuts are broad as in Fig. 2244. Two other interesting holding devices are shown in Fig. 2247 and Fig. 2252, one for form milling and the other for turning the end with a hollow milling cutter. The grip is of wood, and several interesting machines and fixtures are employed. The guard and the catch involves several machining operations, with interesting holding fixtures and gages. The details of the bolo bayonet are also given in Fig. 2337.

OPERATIONS ON THE BAYONET CATCH

Operation	
A.	Forging from bar
B.	Annealing
B-1	Pickling
C	Trimming
D	Cold-dropping
2	Punching screw holes
3-4	Milling top and bottom edges
BB.	Removing burrs left by operation 3
CC.	Removing burrs left by operation 4
5	Hand-milling sides of hook
6	Hollow-milling front end in lathe
8	Polishing sides and end of hook
9	Filing hook and joint
9-A	Bluing
10	Harden in cyanide (hook end, ½ in.), quench in water

OPERATION A. FORGING FROM BAR

Transformation—Fig. 2240. Number of Operators—One. Description of Operation—Shaping from bar. Apparatus and Equipment Used—Billings & Spencer 400-lb. drop hammer. Production—125 pieces per hr.

OPERATION B. ANNEALING

Number of Operators—One. Description of Operation—Packed in iron pots with powdered charcoal, heated to 850 deg. C. (1562 deg. F.) and left over night to cool. Apparatus and Equipment Used—Cast-iron pots, Brown & Sharpe annealing furnaces and oil burners.

OPERATION B-1. PICKLING

Number of Operators—One. Description of Operation—Same as all other picklings, as already described; same apparatus, etc., used as before.

OPERATION C. TRIMMING

Machine Used—Bliss back-geared 1½-in. stroke press. Number of Operators per Machine—One. Punches and Punch Holders—Square shank. Dies and Die Holders—Held in shoe, by setscrews. Stripping Mechanism—Down through die. Average Life of Punches and Dies—15,000 pieces. Production—650 pieces per hr.

OPERATION D. COLD-DROPPING

Number of Operators—One. Description of Operation—Straightening after trimming. Apparatus and Equipment Used—Billings & Spencer 400-lb. drop hammer. Production—900 pieces per hr.

OPERATION 2. PUNCHING SCREW HOLES

Transformation—Fig. 2241. Machine Used—Garvin press, 1½-in. stroke. Number of Operators per Machine—One. Punches and Punch Holders—Round shank. Dies and Die Holders—In shoe, by setscrew. Stripping Mechanism—Steel stripper screwed to face of die. Lubricant—Cutting oil on punch. Gages—Fig. 2242; form, hole location and diameter. Production—900 pieces per hr.

OPERATIONS 3 AND 4. MILLING TOP AND BOTTOM EDGES

Transformation—Fig. 2243. Machine Used—Pratt & Whitney No. 2 Lincoln miller. Number of Machines per Operator—Three. Work-Holding Devices—On pin, clamped by vise jaws, Fig. 2244. Tool-Holding Devices—Standard arbor. Cutting Tools—Milling cutters, Fig. 2245. Number of Cuts—One. Cut Data—70 r.p.m.; ⅛-in. feed. Coolant—Cutting oil, put on with brush. Average Life of Tool Between Grindings—5000 pieces. Gages—Form. Production—75 pieces per hr.

*Copyright, 1917, McGraw-Hill Publishing Co., Inc.

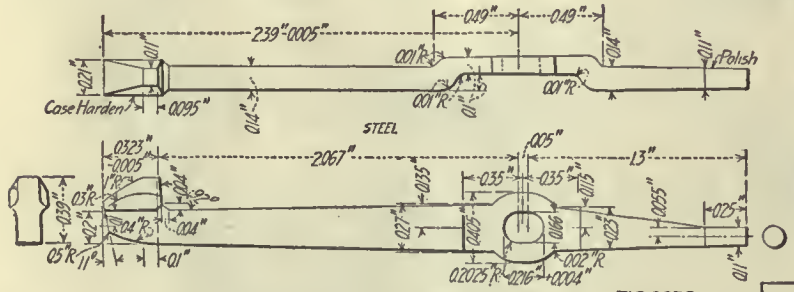

Bayonet Catch FIG. 2239

FIG. 2240 OP. A

FIG. 2241 OP. 2

FIG. 2243

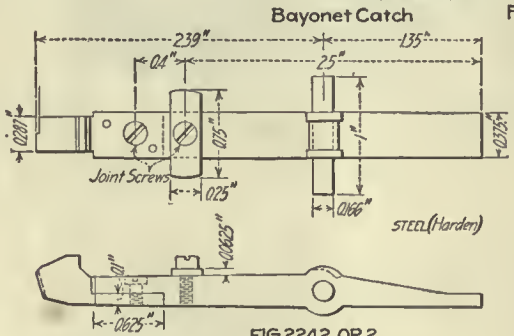

FIG. 2242 OP. 2

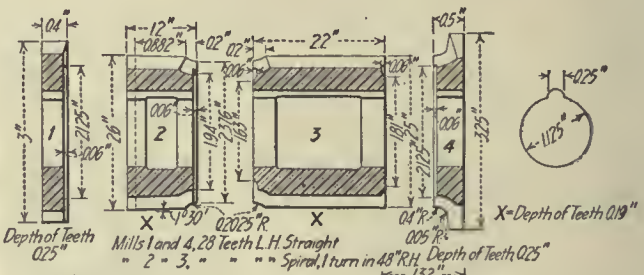

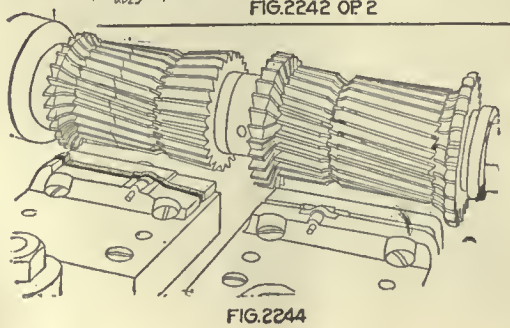

FIG. 2244

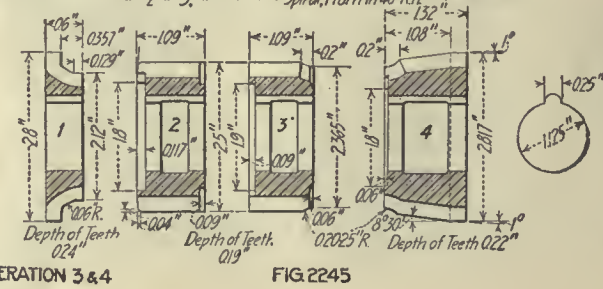

OPERATION 3 & 4 FIG. 2245

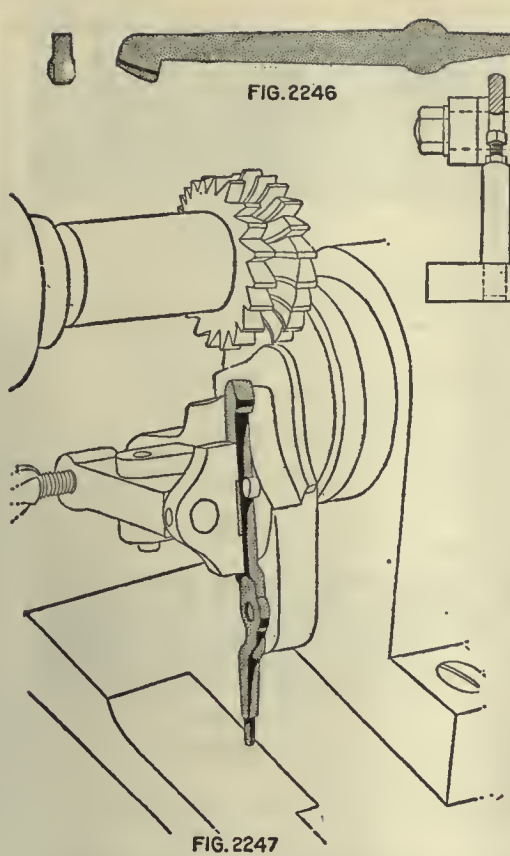

FIG. 2246

FIG. 2247

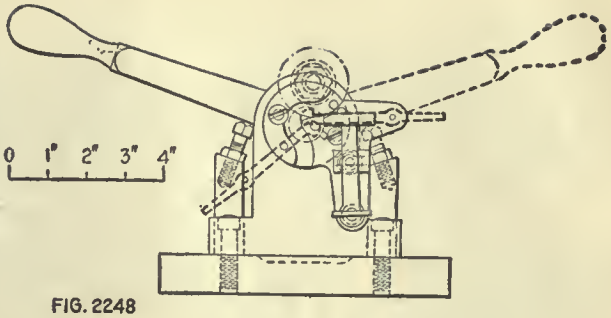

FIG. 2248

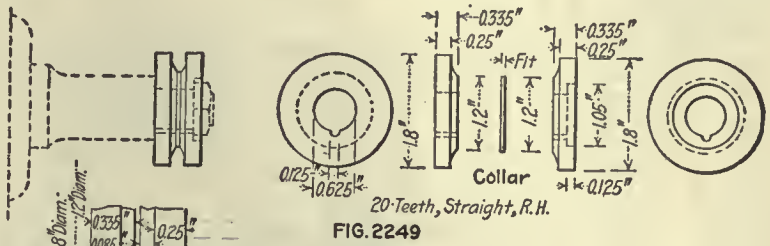

FIG. 2249

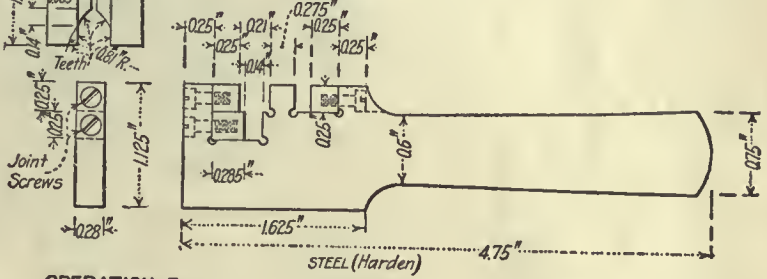

FIG. 2250

OPERATION 5

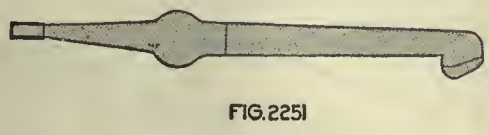

FIG. 2251

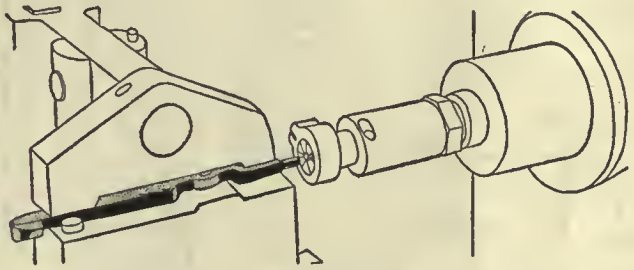

FIG. 2252

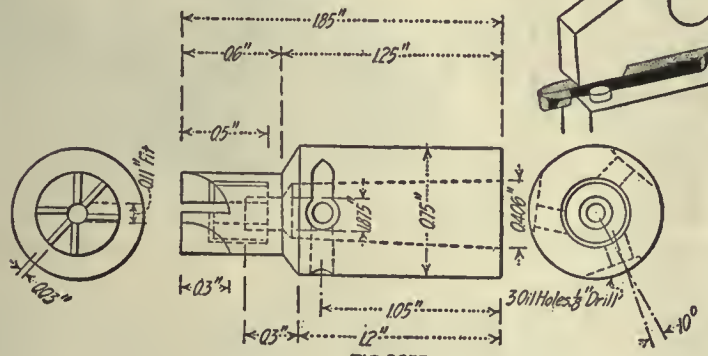

FIG. 2253

OPERATION 6

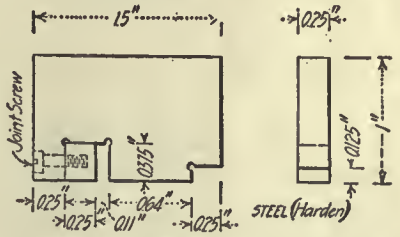

FIG. 2254

OPERATIONS BB AND CC. REMOVING BURRS LEFT BY OPERATIONS 3 AND 4

Number of Operators—One. Description of Operation—Removing burrs from operations 3 and 4. Apparatus and Equipment Used—File. Production—Grouped with operations 3 and 4.

OPERATION 5. HAND-MILLING SIDES OF HOOK

Transformation—Fig. 2246. Machine Used—Garvin No. 3 hand miller. Number of Operators per Machine—One. Work-Holding Devices—Held on pin in rotating fixture, clamped by finger clamps, Fig. 2247; details in Fig. 2248. Tool-Holding Devices—Taper shank. Cutting Tools—Milling cutter, Fig. 2249. Number of Cuts—One. Cut Data—450 r.p.m.; hand feed. Coolant—Cutting oil, $\frac{1}{16}$-in. stream. Average Life of Tool Between Grindings—5000 pieces. Gages—Fig. 2250. Production—350 pieces per hr.

OPERATION 6. HOLLOW-MILLING FRONT END IN LATHE

Transformation—Fig. 2251. Machine Used—Built at Hill shop. Number of Operators per Machine—One. Work-Holding Devices—Held on pin, clamped by finger clamps, Fig. 2252. Tool-Holding Devices—Taper shank. Cutting Tools—Hollow mill, Fig. 2253. Number of Cuts—One. Cut Data—900 r.p.m.; hand feed. Coolant—Cutting oil, $\frac{1}{16}$-in. stream. Average Life of Tool Between Grindings—5000 pieces. Gages—Fig. 2254, diameter and length. Production—175 pieces per hr.

OPERATION 8. POLISHING SIDES AND END OF HOOK

Number of Operators—One. Description of Operation—Polishing sides of hook. Apparatus and Equipment Used—Polishing jack and wheel. Production—175 pieces per hr.

OPERATION 9. FILING HOOK AND JOINT

Number of Operators—One. Description of Operation—Filing hook and joint. Apparatus and Equipment Used—File. Production—75 pieces per hr.

OPERATION 9-A. BLUING

Number of Operators—One. Description of Operation—Same as all other bluing operations. Equipment and Apparatus Used—Same as all other bluing operations.

OPERATION 10. HARDEN IN CYANIDE

Description of Operation—Harden in cyanide at 1500 deg. F.; quenched in oil.

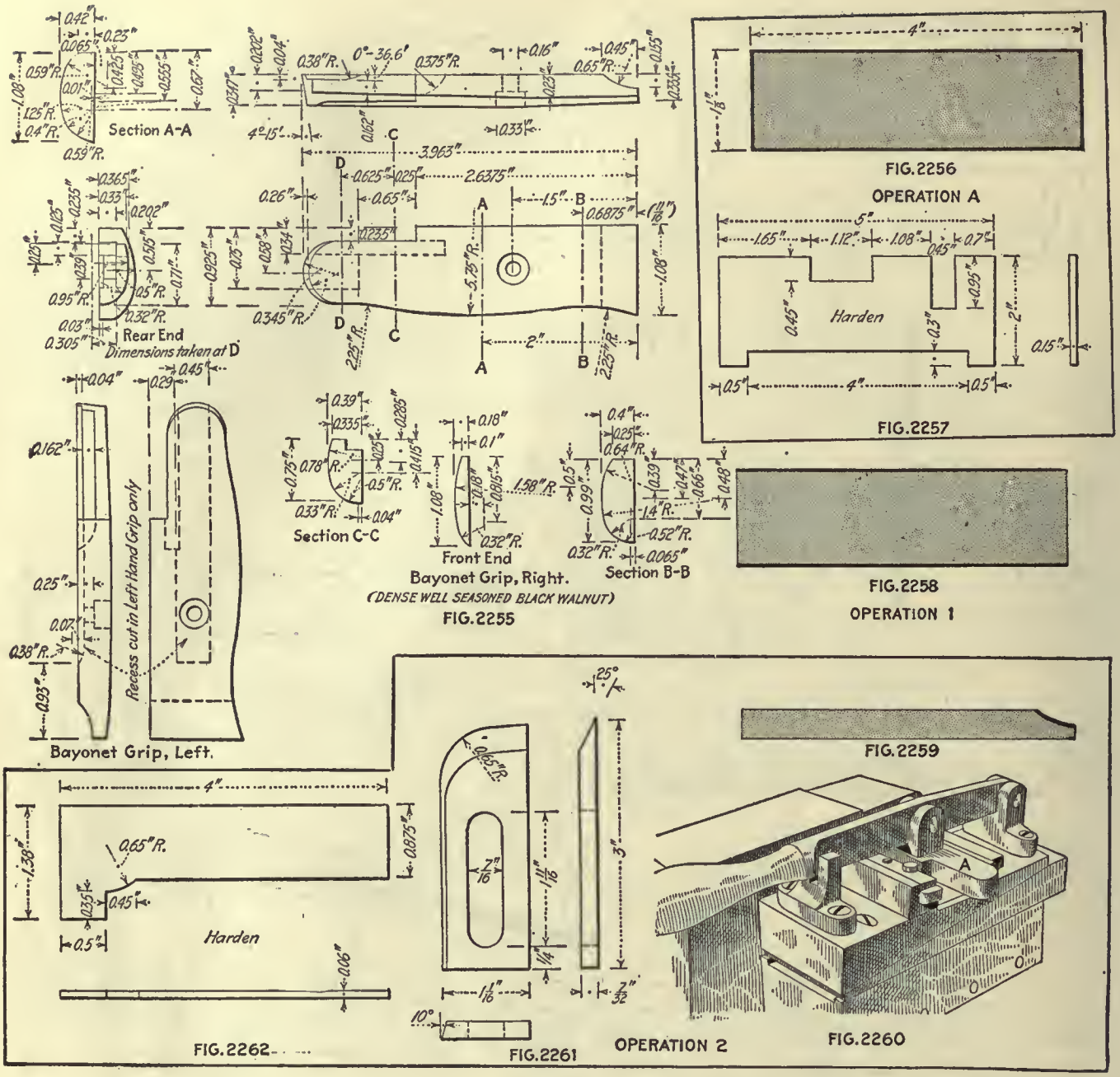

FIG. 2255

FIG. 2256

OPERATION A

FIG. 2257

FIG. 2258

OPERATION 1

FIG. 2259

FIG. 2260

FIG. 2262

FIG. 2261

OPERATION 2

THE BAYONET GRIP

OPERATIONS ON THE BAYONET GRIP, RIGHT

Operation

A. Sawing blanks
1. Sawing blocks, day work, from condemned stocks
2. Cutting circle, inside, front end
3. Cutting to fit pommel, top, rear end
8. Boring and counterboring screw holes
7. Cutting circle, rear end
4-5. Cutting grooves, inside
6. Turning two together
6-A.. Oiling with linseed oil
9. Assembling washer

OPERATION A. SAWING BLANKS

Transformation—Fig. 2258. Machine Used—Regular saw. Number of Operators per Machine—One. Work-Holding Devices—Held in hand, pushed to stop. Tool-Holding Devices—On spindle. Cutting Tools—Saw. Number of Cuts—One. Cut Data—3500 r.p.m.; hand feed. Gages—Fig. 2257; width, thickness and length. Production—1000 pieces per hr.

OPERATION 1. SAWING BLOCKS

Transformation—Fig. 2258. Machine Used—Regular saw table. Number of Operations per Machine—One. Work-Holding Devices—Hand. Tool-Holding Devices—Circular saw arbor. Cutting Tools—Saw. Number of Cuts—One. Production—350 pieces per hr.

OPERATION 2. CUTTING CIRCLE, INSIDE FRONT END

Transformation—Fig. 2259. Machine Used—Wood miller built at Hill shop. Number of Operators per Machine—One. Work-Holding Devices—Held on block by hand clamp A, Fig. 2260. Tool-Holding Devices—Cutter held in tool head. Cutting Tools—Fly cutters, Fig. 2261. Number of Cuts—One. Cut Data—4500 r.p.m.; hand feed. Coolant—None. Average Life of Tool Between Grindings—2500 pieces. Gages—Fig. 2262, form. Production—700 pieces per hr.

OPERATION 3. CUTTING TO FIT POMMEL TOP, REAR END

Transformation—Fig. 2263. Machine Used—Wood miller, built at Hill shop. Number of Operators per Machine.—One. Work-Holding Devices—Work held by right and left vise jaws, Fig. 2264. Tool-Holding Devices—Cutter in holder. Cutting Tools—Fly cutter, Fig. 2265. Number of Cuts—One. Cut Data—3500 r.p.m.; hand feed. Average Life of Tool Between Grindings—1500 pieces. Gages—Fig. 2266, form. Production—700 pieces per hr.

OPERATION 8. BORING AND COUNTERBORING SCREW HOLES

Transformation—Fig. 2267. Machine Used—Ames profiler. Number of Operators per Machine—One. Work-Holding Devices—Ordinary holding fixture. Tool-Holding Devices—Taper shank. Cutting Tools—Drills and counterbores, Fig. 2268. Number of Cuts—One. Cut Data—3500 r.p.m.; hand feed. Average Life of Tool Between Grindings—500 pieces. Gages—Fig. 2269, diameter and location of hole. Production—450 pieces per hr.

OPERATION 7. CUTTING CIRCLE, REAR END

Transformation—Fig. 2270. Machine Used—Ames Manufacturing Co. wood miller. Number of Operators per Machine—One. Work-Holding Devices—Held in fixture by finger clamp. Tool-Holding Devices—Fly-cutter holder. Cutting Tools—Fly cutters, Fig. 2271. Number of Cuts—One. Cut Data—6500 r.p.m.; hand feed. Coolant—None. Average Life of Tool Between Grindings—500 pieces. Gages—Form Fig. 2272. Production—450 pieces per hr.

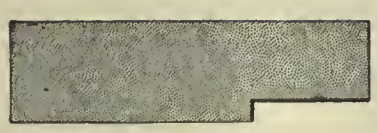

FIG.2263

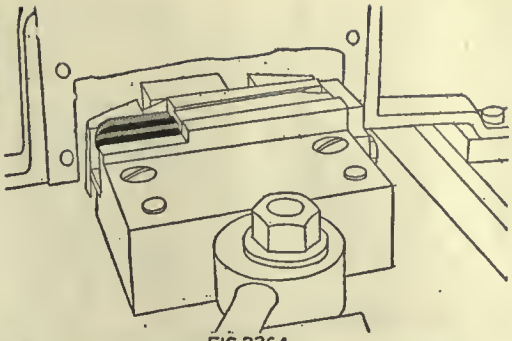

FIG.2264

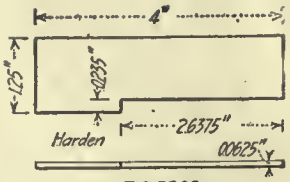

FIG.2266

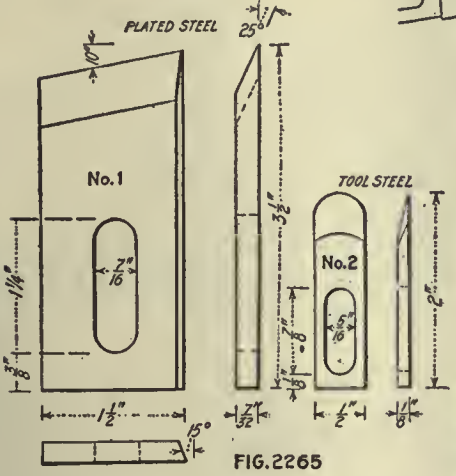

FIG.2265

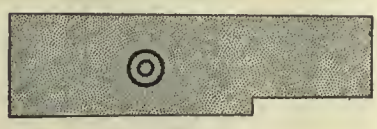

FIG.2267

FIG.2263, 2264, 2265, 2266 OPERATION 3
FIG.2267, 2268, 2269 OPERATION 8.
FIG.2270, 2271, 2272 OPERATION 7.

FIG.2270

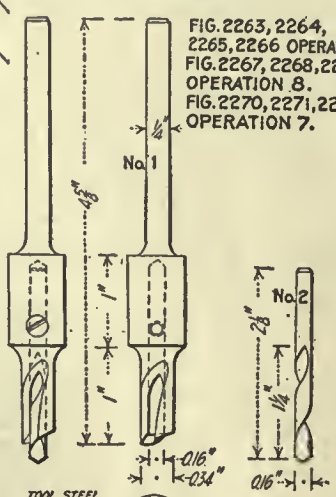

FIG. 2268

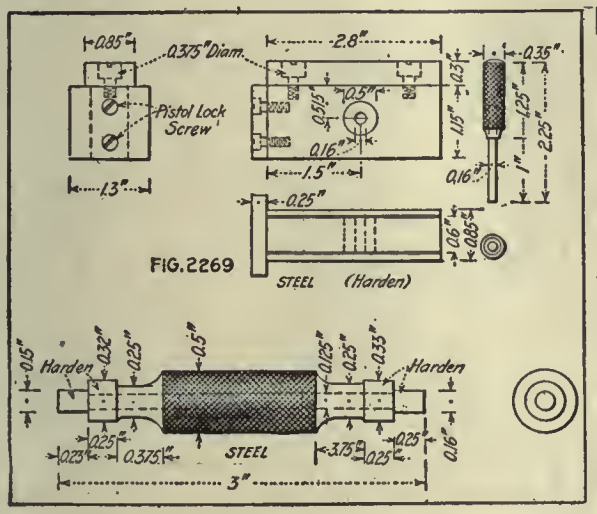

FIG. 2269

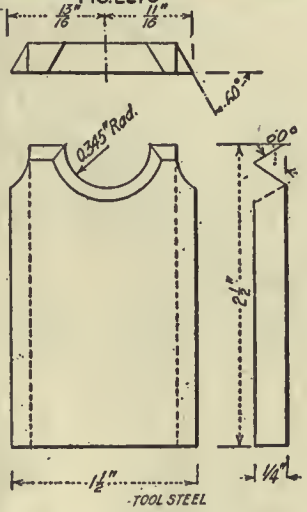

FIG. 2271

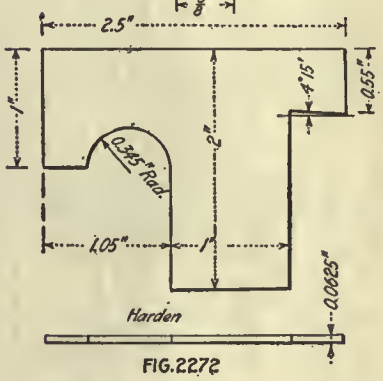

FIG.2272

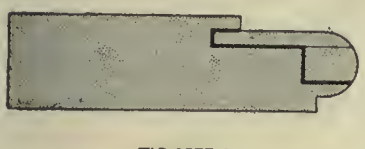

FIG.2273A

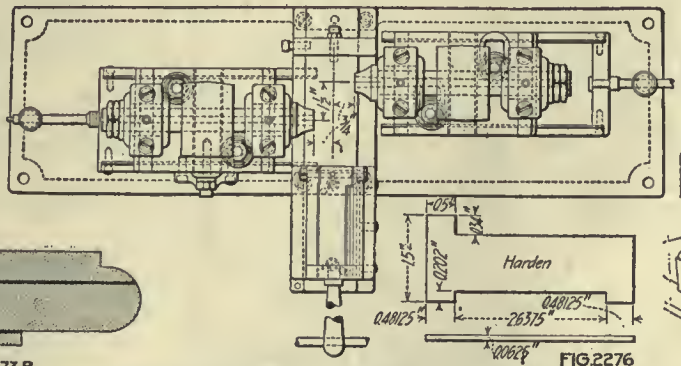

FIG.2276

FIG.2273B

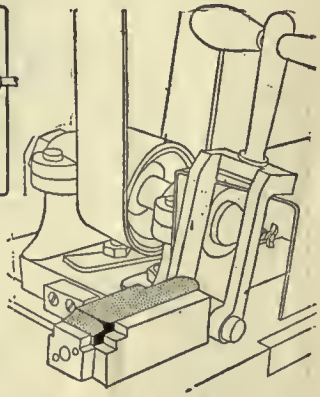

FIG.2275

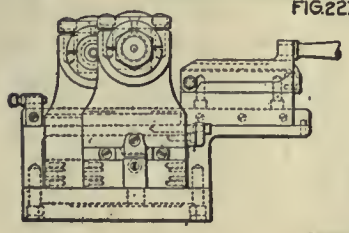

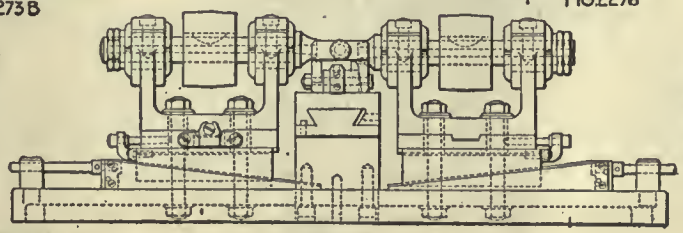

OPERATION 4&5 FIG.2274

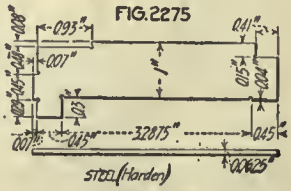

FIG.2276

OPERATIONS 4 AND 5. CUTTING GROOVES, INSIDE

Transformation—Fig. 2273, A and B. Machine Used—Wood miller, built in Hill shop, Fig. 2274. Number of Operators per Machine—One. Work-Holding Devices—Held on block by hand clamp, at rear end, Fig. 2275. Tool-Holding Devices—Taper shank. Cutting Tools—Coarse-tooth cutters. Number of Cuts—One. Cut Data—4500 r.p.m.; hand feed. Average Life of Tool Between Grindings—5000 pieces. Gages—Fig. 2276, location and width of cuts. Production—350 pieces per hr.

OPERATION 6. TURNING TWO TOGETHER

Transformation—Fig. 2277. Machine Used—Ames form trimmer, similar to turning gunstocks. Number of Operators per Machine—One. Work-Holding Devices—Held in arbor clamped at ends, Fig. 2278; turning form shown in Fig. 2279; details of working in Fig. 2280. Tool-Holding Devices—Fly cutters held in holder. Cutting Tools—Hook cutters, Fig. 2281. Number of Cuts—One. Cut Data—Speed of cutter, 6500 r.p.m.; speed of work, 60 r.p.m. Average Life of Tool Between Grindings—5500 grips. Gages—Fig. 2282; A and B, form; C, thickness. Production—125 pieces per hr.

OPERATION 6-A. OILING WITH LINSEED OIL

Number of Operators—One. Description of Operation—Placed in trays and dipped in linseed oil; left over night to dry. Apparatus and Equipment Used—Wire trays, tanks and linseed oil.

OPERATION 9. ASSEMBLING

Number of Operators—One. Description of Operation—Assembling grips to blade. Apparatus and Equipment Used—Screwdriver. Gages—General gage, similar to Fig. 2282. Production—450 pieces per hr.

The Bayonet Guard

OPERATIONS ON THE BAYONET GUARD

Operation

- O. Cutting off
- A. Forging from bar
- B. Annealing
- D. Pickling
- C. Trimming and punching barrel holes
- 3. Grinding rear side and front side
- 6. Hand-milling slot for blade
- 7. Shaving for blade
- DD. Burring operation 71
- 10. Reaming barrel hole to finish
- 12. Drilling rivet holes
- EE. Burring operation 12
- 13. Profiling edges
- 15. Hand-milling rear side, lower edge
- 17. Hand-milling for scabbard catch
- 14. Hand-milling for bolster on blade
- 16. Chambering barrel hole
- 18. Polishing sides and edges except at rivet holes

OPERATION O. CUTTING OFF

Number of Operators—One. Description of Operation—Bars come about 10 ft. long and are cut in half for drop-forging. Apparatus and Equipment Used—Hilles No. 2 stock shears. Production—900 pieces per hr.

FIG. 2277

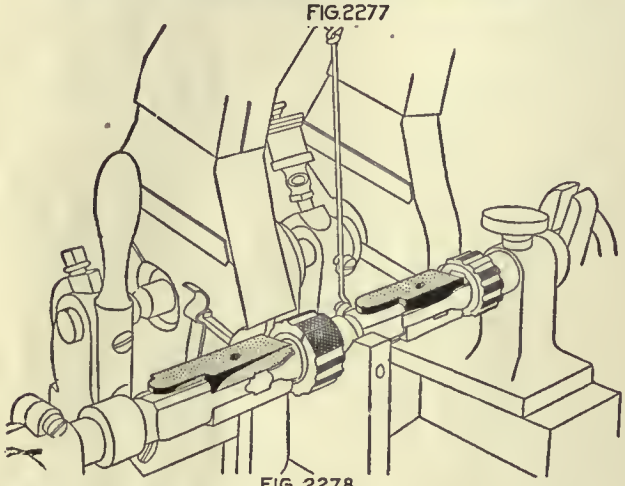

FIG. 2278

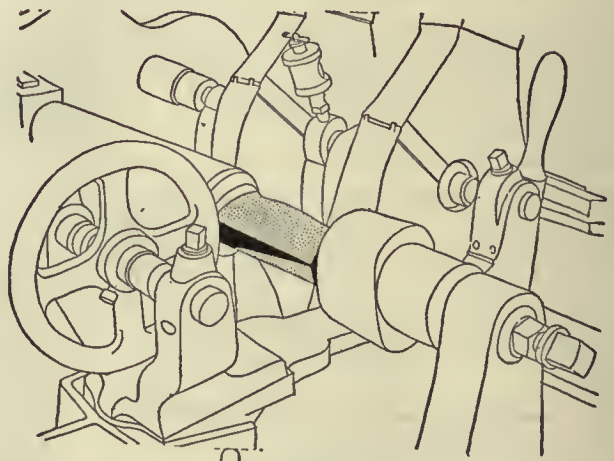

FIG. 2279

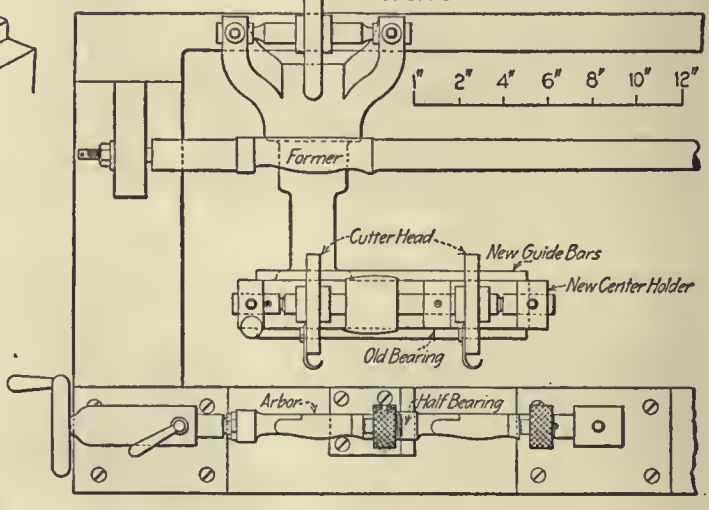

FIG. 2280

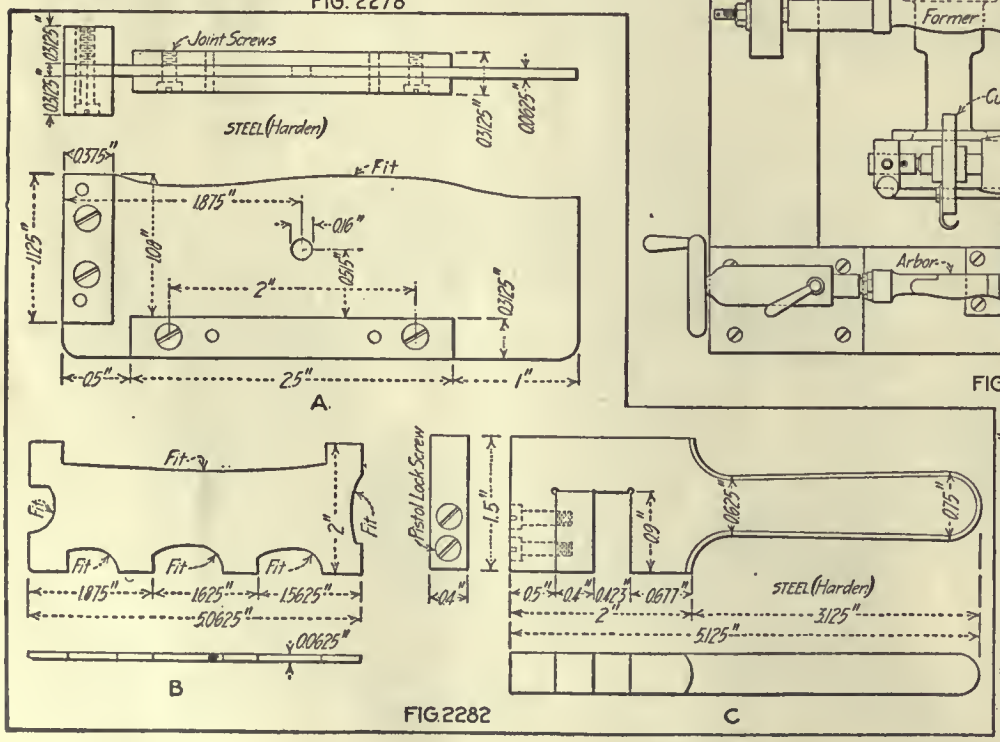

FIG. 2282

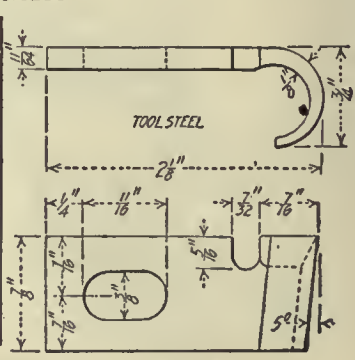

FIG. 2281

OPERATION 6

OPERATION A. FORGING FROM BAR

Transformation—Fig. 2284. Number of Operators—One. Description of Operation—Shaping from bar. Apparatus and Equipment Used—Billings & Spencer 400-lb. drop hammer. Production—125 pieces per hr.

OPERATION B. ANNEALING

Number of Operators—One. Description of Operation—Placed in iron pots packed with powdered charcoal, heated to 850 deg. C. (1562 deg. F.), left over night to cool. Apparatus and Equipment Used—Brown & Sharpe annealing, oil-burning furnaces; powdered charcoal.

OPERATION D. PICKLING

Number of Operators—One. Description of Operation—Put in wire baskets and placed in the pickling solution, which consists of 1 part sulphuric acid and 9 parts water; left in this from 10 to 12 min. Apparatus and Equipment Used—Wire baskets, wooden pickling tanks, hand hoist.

OPERATION C. TRIMMING AND PUNCHING BARREL HOLES

Transformation—Fig. 2285. Machine Used—Bliss No. 21 tip-over press, 1¼-in. stroke. Number of Operators per Machine—One. Punches and Punch Holders—Square shank Dies and Die Holders—Held in shoe by setscrew. Stripping Mechanism—Same stripping as butt plate. Average Life of Punches and Dies—15,000 pieces. Lubricant—Punches oiled with cutting oil. Production—600 pieces per hr. Note—This is the same style of die as for trimming butt plate.

OPERATION 3. GRINDING REAR AND FRONT SIDES

Transformation—Fig. 2286. Machine Used—Same Pratt & Whitney vertical grinder as all others. Number of Operators per Machine—One. Work-Holding Devices—Held between strips of steel on sides and ends of magnetic chuck. Cut Data—Same as previous grinding on this machine. Production—165 pieces per hr.

OPERATION 6. HAND-MILL SLOT FOR BLADE

Transformation—Fig. 2287. Machine Used—Garvin No. 8 hand miller. Number of Operators per Machine—One. Work-Holding Devices—On pin, clamped by vise jaws, Fig. 2288. Tool-Holding Devices—Standard arbor. Cutting Tools—Milling cutter, Fig. 2289. Number of Cuts—One. Cut Data—450 r.p.m.; hand feed. Coolant—Cutting oil, ⅛-in. stream. Average Life of Tool Between Grindings—5000 pieces. Gages—Length and width of slot. Production—350 pieces per hr.

OPERATION 7. SHAVING FOR BLADE

Transformation—Fig. 2290. Machine Used—Snow-Brooks No. 2, 1¼-in. stroke. Number of Operators per Machine—One. Punches and Punch Holders—Square shank. Dies and Die Holders—Fixture bolted to bed of press; pins in fixture locate the work, Fig. 2291. Average Life of Punches—500 pieces. Lubricant—Cutting oil, put on with brush. Gages—Width, length and location of slot from barrel hole, Fig. 2292. Production—120 pieces per hr.

OPERATION DD. BURRING OPERATION

Number of Operators—One. Description of Operation—Removing burrs from operation 7. Apparatus and Equipment Used—File. Production—400 pieces per hr.

OPERATION 10. REAMING BARREL HOLE TO FINISH

Transformation—Fig. 2293. Machine Used—Ames single-spindle 16-in. upright drilling machine. Number of Operators per Machine—One. Work-Holding Devices—Work set in block with pin for stop; lever across top to keep work down, Fig. 2294. Tool-Holding Devices—Taper shank. Cutting Tools—Fig. 2295; A, counterbore; B, reamer. Number of Cuts—Two. Cut Data—450 r.p.m.; hand feed. Coolant—Cutting oil, ⅛-in. stream. Average Life of Tool Between Grindings—1500 pieces. Gages—Plug for diameter. Production—100 pieces per hr. Note—Counterbored and reamed at one setting.

OPERATION 12. DRILLING RIVET HOLES

Transformation—Fig. 2296. Machine Used—Pratt & Whitney three-spindle upright 16-in. drilling machine. Number of Operators per Machine—One. Work-Holding Devices—Drill jig, Fig. 2297; cam A locates and holds guard. Tool-Holding Devices—Drill chuck. Cutting Tools—Twist drills. Number of Cuts—Two. Cut Data—750 r.p.m.; hand feed. Coolant—Cutting oil, ⅛-in. stream. Average Life of Tool Between Grindings—360 pieces. Gages—Fig. 2298, diameter and location of holes. Production—50 pieces per hr.

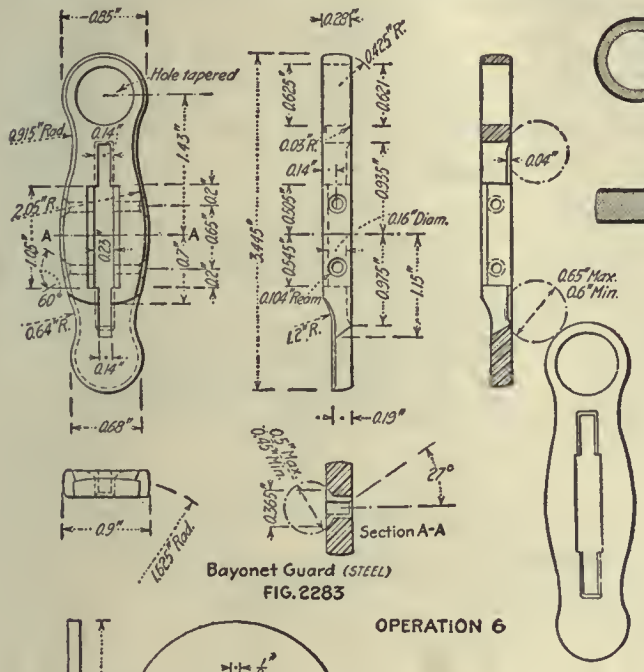

FIG. 2283

FIG. 2284
OPERATION A

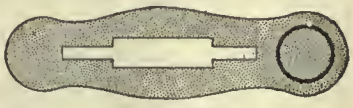
FIG. 2285
OPERATION C

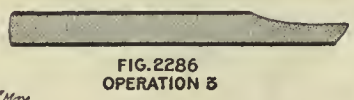
FIG. 2286
OPERATION 3

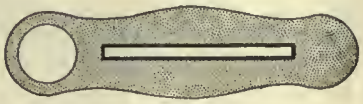
FIG. 2287

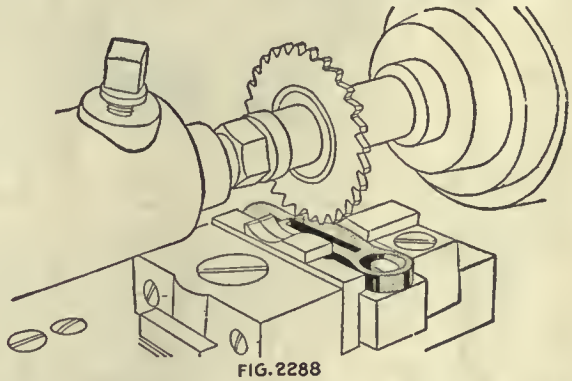
FIG. 2288

OPERATION 6

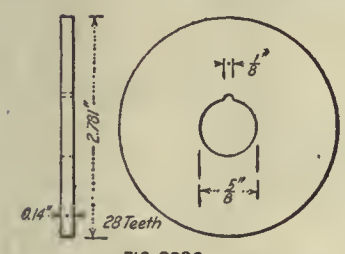
FIG. 2289

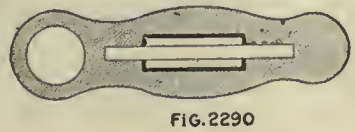
FIG. 2290

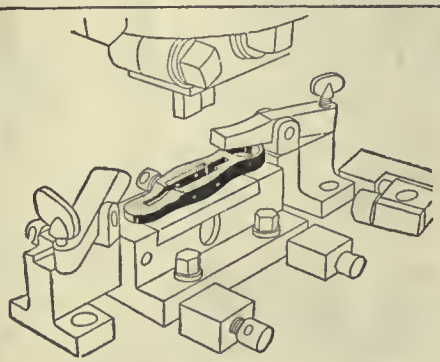
FIG. 2291

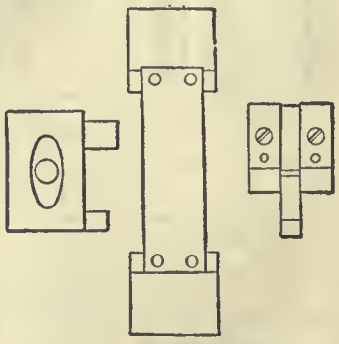
FIG. 2292

OPERATION 7

OPERATION EE. BURRING OPERATION

Number of Operators—One. Description of Operation—Removing burrs from operation 12. Apparatus and Equipment Used—File. Production—300 pieces per hr.

OPERATION 13. PROFILING EDGES

Transformation—Fig. 2299. Machine Used—Pratt & Whitney No. 2 profiler. Number of Operators per Machine—One. Work-Holding Devices—Held on pin, clamped by finger clamp, which comes up through hole in blade, Fig. 2300. Tool-Holding Devices—Taper shank. Cutting Tools—Milling cutters, Fig. 2301. Number of Cuts—One. Cut Data—1200 r.p.m.; hand feed. Coolant—Cutting oil, ¼-in. stream. Average Life of Tool Between Grindings—300 pieces. Gages—Form, Fig. 2302. Production—40 pieces per hr.

OPERATION 15. HAND-MILLING REAR SIDE, LOWER EDGE

Transformation—Fig. 2303. Machine Used—Brainard large hand miller. Number of Operators per Machine—One. Work-Holding Devices—Held on stud with pin to center work, Fig. 2303. Tool-Holding Devices—Taper shank. Cutting Tools—Fig. 2305, hand miller. Number of Cuts—One. Cut Data—250 r.p.m.; hand feed. Coolant—Cutting oil, ⅛-in. stream. Average Life of Tool Between Grindings—5000 pieces. Gages—Fig. 2306, contour and length. Production—175 pieces per hr.

OPERATION 17. HAND-MILLING FOR SCABBARD CATCH

Transformation—Fig. 2307. Machine Used—Whitney hand miller. Number of Operators per Machine—One. Work-Holding Devices—Work held against pin by key in block hole; fixture is held lengthwise; details in Fig. 2308. Tool-Holding Devices—Taper shank. Cutting Tools—Milling cutter, Fig. 2309. Number of Cuts—One. Cut Data—450 r.p.m.; hand feed. Coolant—Cutting oil, put on with brush. Average Life of Tool Between Grindings—3500 pieces. Gages—Form and depth. Production—350 pieces per hr.

OPERATION 14. HAND-MILLING FOR BOLSTER ON BLADE

Transformation—Fig. 2310. Machine Used—Whitney hand miller. Number of Operators per Machine—One. Work-Holding Devices—Work held by key in block hole, Fig. 2311. Tool-Holding Devices—Taper shank. Cutting Tools—Milling cutter, Fig. 2312. Number of Cuts—One. Cut Data—450 r.p.m.; hand feed. Coolant—Cutting oil, put on with brush. Average Life of Tool Between Grindings—3500 pieces. Gages—Form and size. Production—200 pieces per hr.

OPERATION 16. CHAMBERING BARREL HOLE

Transformation—Fig. 2313. Number of Operators—One. Description of Operation—Chambering barrel hole. Apparatus and Equipment Used—Bench lathe and counterbore; work held by hand; cutter, Fig. 2314. Gages—Fig. 2315, diameter and depth. Production—350 pieces per hr.

OPERATION 18. POLISHING SIDES AND EDGES EXCEPT AT RIVET HOLES

Number of Operators—One. Description of Operation—Polishing sides and edges. Apparatus and Equipment Used—Polishing jack and wheel. Production—35 pieces per hr.

The Bayonet-Scabbard Catch

OPERATIONS ON THE BAYONET-SCABBARD CATCH

Operation

0. Cutting off
A. Forging from bar
B. Annealing
B-1. Pickling
C. Trimming
1. Milling pivot (screw machine)
7. Milling thumb-piece for bedding
2-3. Milling right and left sides
6. Drilling for bayonet catch
4. Milling thumb-piece (on angle) and hook
BB. Removing burrs left by operation 4
5. Milling top and circle of hook
CC. Removing burrs left by operation 6
8. Checking thumb-piece
9. Polishing hook and circle of thumb-piece
10. Filing, cornering thumb-piece
11. Casehardening

OPERATION 0. CUTTING OFF

Number of Operators—One. Description of Operation—Cutting stock in half. Apparatus and Equipment Used—Hilles stock shears No. 2. Production—1200 pieces per hr.

OPERATION A. FORGING FROM BAR

Transformation—Fig. 2317. Number of Operators—One. Description of Operation—Shaping from bar. Apparatus and Equipment Used—Billings & Spencer 400-lb. drop hammer. Production—500 pieces per hr.

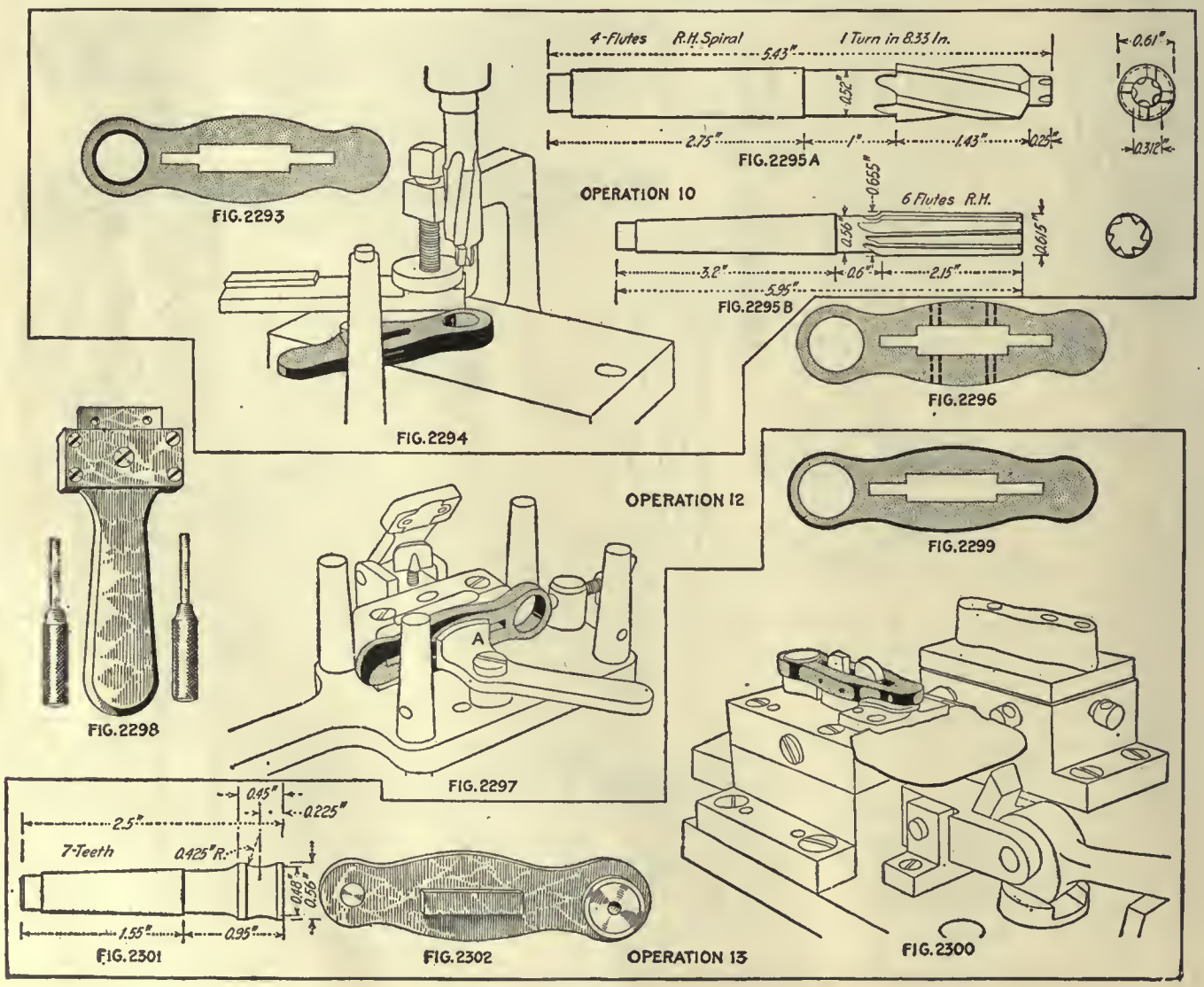

OPERATION B. ANNEALING

Number of Operators—One. Description of Operation—Packed in iron pots with powdered charcoal and heated to 850 deg. C. (1562 deg. F.), left over night to cool. Apparatus and Equipment Used—Brown & Sharpe annealing furnaces, oil burner and powdered charcoal.

OPERATION B-1. PICKLING

Number of Operators—One. Description of Operation—Placed in wire baskets and then in the pickling solution, which consists of 1 part sulphuric acid and 9 parts water, and left in this from 10 to 12 min. Apparatus and Equipment Used—Wire baskets, wooden pickling tanks, hand hoist.

OPERATION C. TRIMMING

Machine Used—Snow-Brooks No. 1, 1½-in. stroke. Number of Operators per Machine—One. Punches and Punch Holders—Round shank. Dies and Die Holders—Held in shoe by setscrew. Stripping Mechanism—Pushed down through die. Production—650 pieces per hr.

OPERATION 1. MILLING PIVOT (SCREW MACHINE)

Transformation—Fig. 2318. Machine Used—Pratt & Whitney hand screw machine. Number of Operators per Machine—One. Work-Holding Devices—Held in two-jaw chuck. Tool-Holding Devices—Turret of machine. Cutting Tools—Hollow-mill and cross-slide tools. Number of Cuts—Three. Cut Data—750 r.p.m.; hand feed. Coolant—Cutting oil, ¼-in. stream. Average Life of Tool Between Grindings—500 pieces per hr. Gages—Fig. 2319, diameter and length. Production—45 pieces per hr.

OPERATION 7. MILLING THUMB-PIECE FOR BEDDING

Transformation—Fig. 2320. Machine Used—Whitney hand miller. Number of Operators per Machine—One. Work-Holding Devices—Special vise jaws. Tool-Holding Devices—Taper shank. Cutting Tools—Side mill, 1½ x ⅜ in. Number of Cuts—One. Cut Data—450 r.p.m.; hand feed. Coolant—None. Average Life of Tool Between Grindings—10,000 pieces. Gages—None. Production—350 pieces per hr.

OPERATIONS 2 AND 3. MILLING RIGHT AND LEFT SIDES

Transformation—Fig. 2321. Machine Used—Pratt & Whitney No. 2 Lincoln miller. Number of Machines per Operator—Two. Work-Holding Devices—Held by pivot, on catch clamped by vise jaws, Fig. 2322. Tool-Holding Devices—Standard arbor. Cutting Tools—Formed milling cutter, as shown. Number of Cuts—One. Cut Data—120 r.p.m.; ⅛-in. feed. Coolant—Cutting oil, put on with brush. Gages—Fig. 2323, form and thickness of lug. Production—100 pieces per hr.

OPERATION 6. DRILLING FOR BAYONET CATCH

Transformation—Fig. 2324. Machine Used—Sigourney 16-in. two-spindle. Number of Operators per Machine—One. Work-

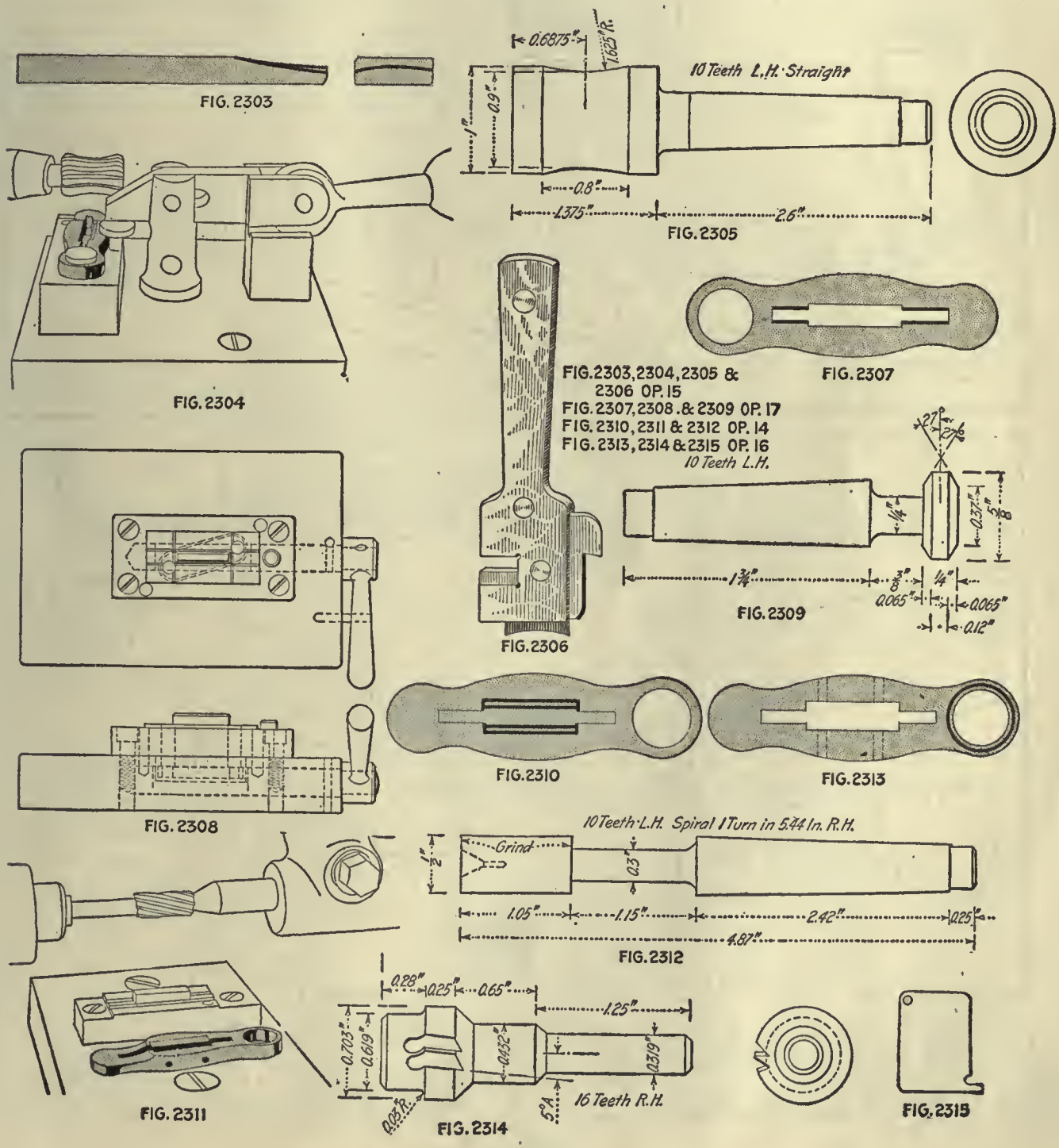

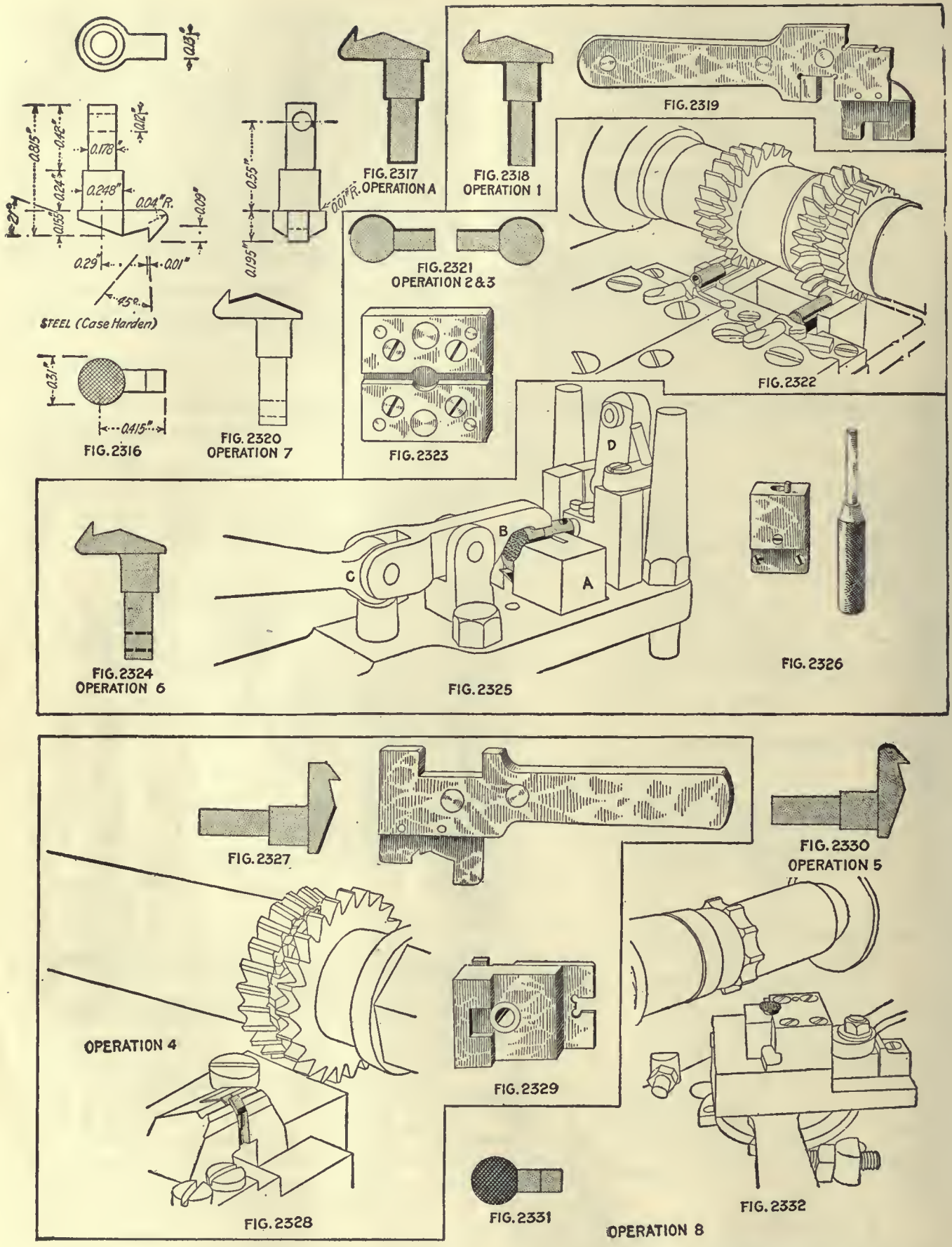

Holding Devices—Drill jig, Fig. 2325; holds work in V-block, by finger B and cam C; drill bushing in surveying leaf D. Tool-Holding Devices—Drill chuck. Cutting Tools—Twist drill. Number of Cuts—One. Cut Data—750 r.p.m.; hand feed. Coolant—Cutting oil, $\frac{1}{8}$-in. stream. Average Life of Tool Between Grindings—500 pieces per grind. Gages—Fig. 2326, diameter of hole and location by using block. Production—125 pieces per hr.

OPERATION 4. MILLING THUMB-PIECE (ON ANGLE) AND HOOK

Transformation—Fig. 2327. Machine Used—Standard No. 4½ universal miller. Number of Operators per Machine—One. Work-Holding Devices—Upright by vise jaws, Fig. 2328. Tool-Holding Devices—Standard arbor. Cutting Tools—Formed cutters. Number of Cuts—One. Cut Data—120 r.p.m.; $\frac{3}{8}$-in. feed. Coolant—Cutting oil, put on with brush. Averag

Life of Tool Between Grindings—5000 pieces. Gages—Fig. 2329, shape and location of cut. Production—350 pieces per hr.

OPERATION BB. REMOVING BURRS LEFT BY OPERATION 4

Number of Operators—One. Description of Operation—Removing burrs from operation 4. Apparatus and Equipment Used—File. Production—Grouped with operation 4.

OPERATION 5. MILLING TOP AND CIRCLE OF HOOK

Transformation—Fig. 2330. Machine Used—Pratt & Whitney rebuilt No. 2. Number of Operators per Machine—One. Work-Holding Devices—Work located against stop, clamped by vise jaws as usual. Tool-Holding Devices—Standard arbor. Cutting Tools—Formed milling cutters. Number of Cuts—One. Cut Data—70 r.p.m.; ⅛-in. feed. Coolant—Cutting oil, put on with brush. Average Life of Tool Between Grindings—5000 pieces. Gages—Form. Production—350 pieces per hr.

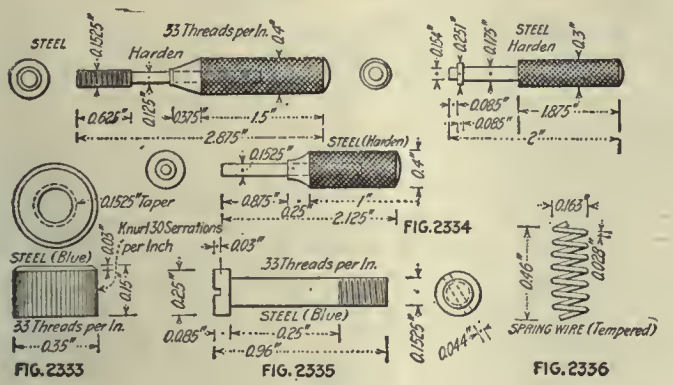

FIG. 2333 FIG. 2335 FIG. 2334 FIG. 2336

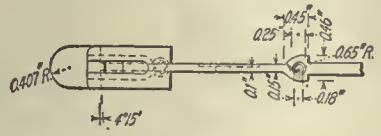

OPERATION CC. REMOVING BURRS LEFT BY OPERATION 5

Number of Operators—One. Description of Operation—Removing burrs from operation 5. Apparatus and Equipment Used—File. Production—Grouped with operation 5.

OPERATION 8. CHECKING THUMB-PIECE

Transformation—Fig. 2331. Machine Used—Brainard large hand miller. Number of Operators per Machine—One. Work-Holding Devices—Held in rotating fixture, rotated 90 deg. between the two cuts, Fig. 2332. Tool-Holding Devices—Standard arbor. Cutting Tools—Checking milling cutters. Number of Cuts—Two. Coolant—None. Average Life of Tool Between Grindings—5000 pieces. Gages—None. Production—350 pieces per hr.

OPERATION 9. POLISHING HOOK AND CIRCLE OF THUMB-PIECE

Number of Operators—One. Description of Operation—Polishing hook and circle of thumb-piece. Apparatus and Equipment Used—Wheel and polishing jack. Production—125 pieces per hr.

OPERATION 10. FILING, CORNERING THUMB-PIECE

Number of Operators—One. Description of Operation—Filing and cornering. Apparatus and Equipment Used—File. Production—350 pieces per hr.

OPERATION 11. CASEHARDENING

Number of Operators—One. Description of Operation—Harden in cyanide at 1500 deg. F.; quench in oil.

The Bayonet Nut

OPERATIONS ON THE BAYONETT NUT

Operation
1. Automatic
2. Polishing
3. Bluing

OPERATION 1. AUTOMATIC

Machine Used—Hartford No. 2 automatic. Number of Machines per Operator—Four. Work-Holding Devices—Held in draw-in chuck. Tool-Holding Devices—Turret of machine. Cutting Tools—Standard. Number of Cuts—Five; fourth cut is a tap. Cut Data—700 r.p.m.; $\frac{1}{16}$-in. feed. Coolant—Cutting oil, ⅜-in. stream. Average Life of Tool Between Grindings—700 pieces. Gages—Fig. 2334. Production—90 pieces per hr.

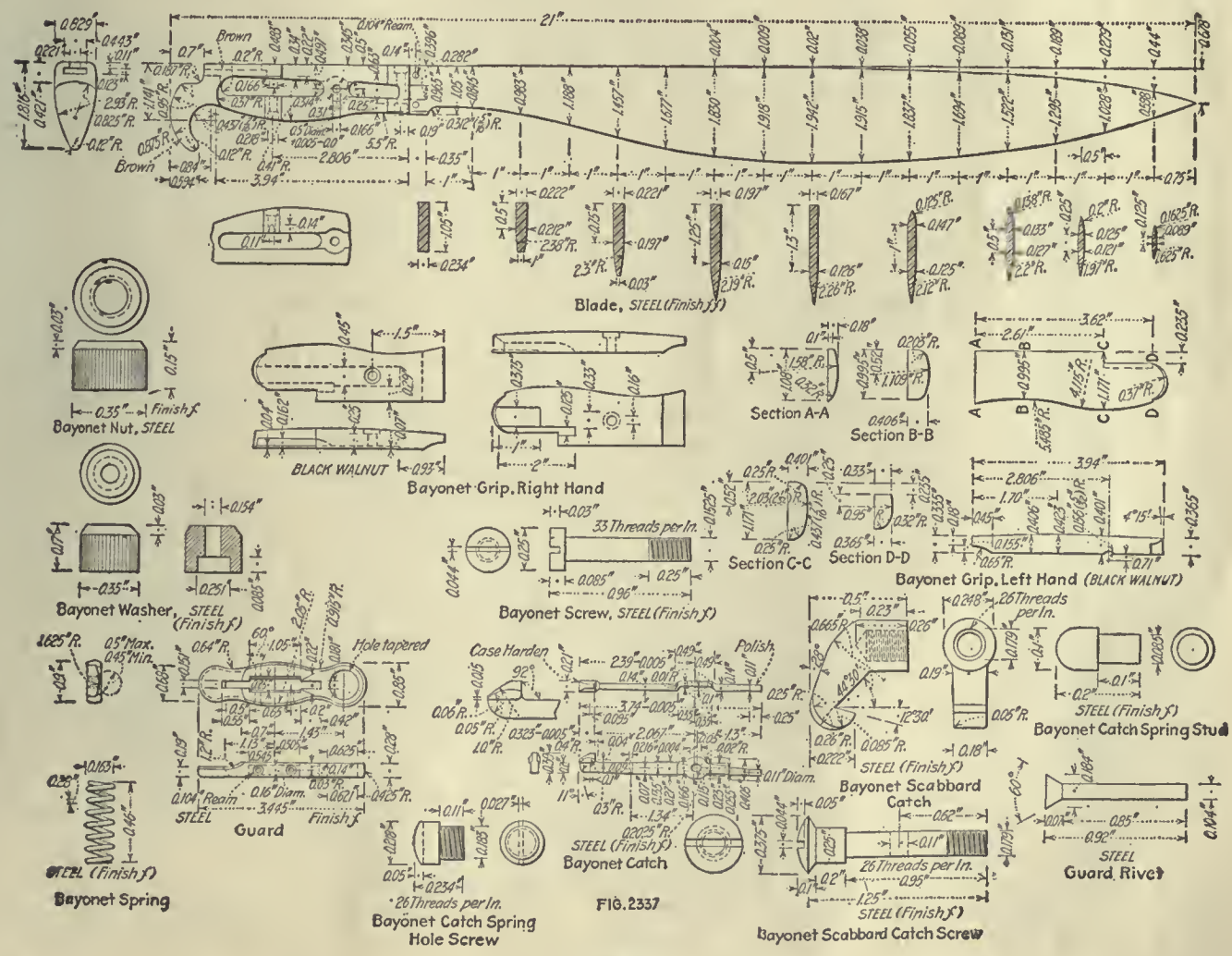

FIG. 2337

OPERATION 2. POLISHING

Number of Operators—One. Description of Operation—Removing burrs. Apparatus and Equipment Used—Wheel and polishing jack. Production—1500 pieces per hr.

OPERATION 3. BLUING

Number of Operators—One. Description of Operation—Blued in niter at 800 deg. F., as usual.

The bayonet screw is an automatic screw machine job, details being shown in Fig. 2335. The bayonet rivets are purchased.

The Bayonet Screw

OPERATIONS ON BAYONET SCREW

Operation
1. Automatic, Hart No. 2 and Acme
2. Slitting, hand and automatic
3. Crowning hand
4. Bluing

OPERATION 1. AUTOMATIC, ACME

Machine Used—Acme No. 1. Number of Machines per Operator—Four. Work-Holding Devices—Held in draw-in chuck. Tool-Holding Devices—In turret of machine. Number of Cuts—Five. Cut Data—1100 r.p.m.; $\frac{1}{8}$-in. feed. Coolant—Cutting oil, $\frac{3}{8}$-in. stream. Average Life of Tool Between Grindings—800 pieces. Production—100 pieces per hr.

OPERATION 2. SLITTING

Machine Used—Manville automatic screw slotter. Number of Machines per Operator—Four. Work-Holding Devices—Special jaws. Tool-Holding Devices—Standard arbor. Cutting Tools—Slitting saw, 0.044 in. thick. Number of Cuts—One. Cut Data—450 r.p.m. Average Life of Tool Between Grindings—5000 pieces. Production—120 pieces per hr.

The Bayonet Washer

OPERATIONS ON THE BAYONET WASHER

Operation
1. Automatic
2. Bluing

The spring is coiled in a speed lathe and cut to length after coiling at the rate of about 350 per hour. One end is then closed in with a special punch, so as to fit the catch, at the rate of about 500 per hour. Details of the spring are shown in Fig. 2336.

The Bayonet Spring

OPERATIONS ON THE BAYONET SPRING

Operation
1. Coiling and cutting
2. Crimping

The bolo bayonet is shown in detail in Fig. 2337, the peculiar cross-section of the blade necessitating some very interesting milling fixtures. These are of the bridge-milling type, in which the lengthwise contour is determined by the rise and fall of the bridge that carries the work. In addition to this, the blade is given a side rocking motion by means of properly shaped cams on the sides of the bridge, so that the blade rolls under the cutter from point to pommel. Special formed milling cutters are used for the various operations, as with the regular bayonet, but varied to suit the different shape of the bolo.

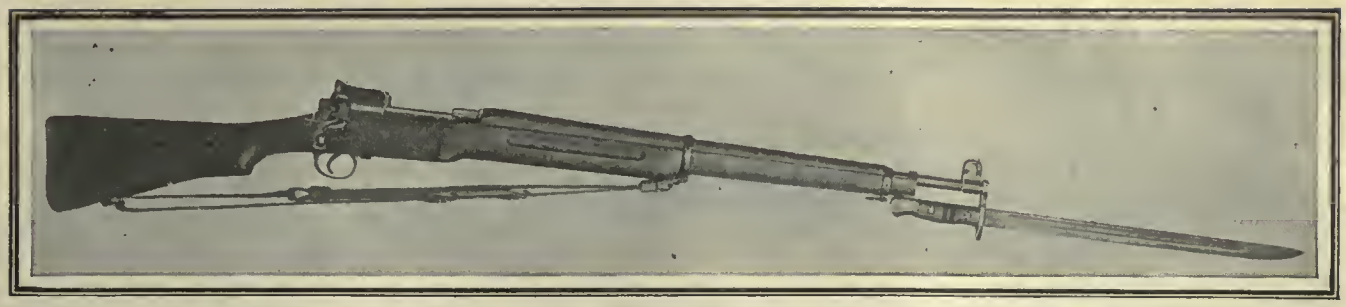

The Modified Enfield Rifle

Model 1917

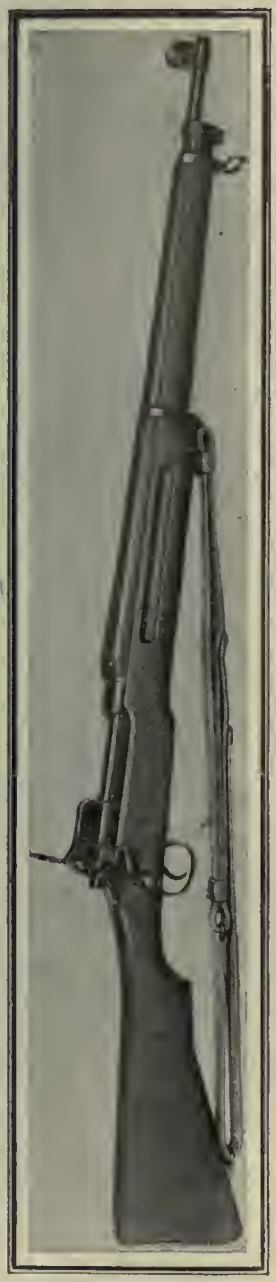

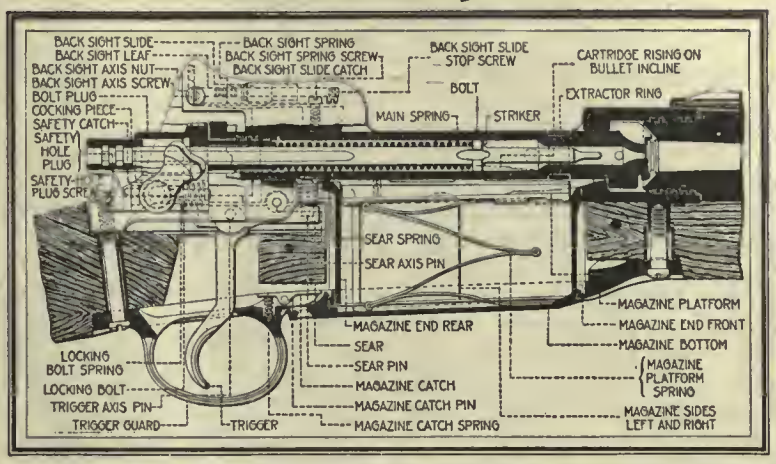

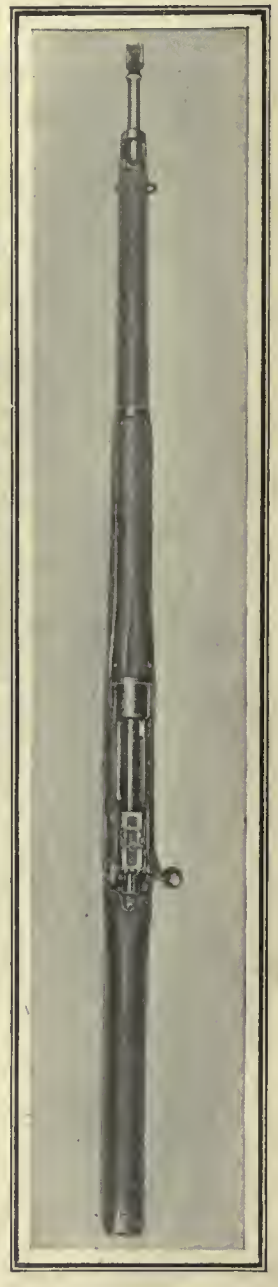

SYNOPSIS—*Owing to the fact that the Springfield rifle, model 1903, cannot be produced in sufficient quantities, the Government has decided to adopt a modification of the English Enfield rifle, chambered for our regular cartridges. This article shows the rifle and its mechanism and also describes the action.*

By Ethan Viall

THE rifle that is to be used by our troops abroad is a modification of the English Enfield rifle, model of 1914, adapted to use the United States standard caliber .30 ammunition. The receiver and bolt are of 3½ per cent. nickel steel and are somewhat larger than in the United States Springfield. While differing in general design, they have the same functioning features of side ejection and rotating motion of bolt in loading and extracting.

The barrel, made of what is known as smokeless barrel steel of practically the same specifications as for the United States Springfield, is 2 in. longer than the Springfield barrel. The bayonet is 1.125 in. longer, and the assembled rifle with bayonet is 4.125 in. longer than the United States Springfield. The magazine is practically a duplicate of the United States Springfield and uses the same cartridge clip in loading, which carries five cartridges.

The rear sight is located on the top rear end of the receiver, increasing the sight radius 9.548 in. over that of the Springfield, which has the rear sight located on top of the breech end of the barrel. The location of the sight on the receiver brings it closer to the eye.

The bolt lever is shown projecting at the right. In operating the bolt, this lever is brought to a vertical position and pushed out or in. Cartridges placed in the magazine are pushed upward to the feeding mechanism

Copyright, 1917, McGraw-Hill Publishing Co., Inc.

by means of the spring shown. The bolt moves backward and forward, as moved by the operator, and rotates in the well of the body. It carries either a cartridge from the magazine or one placed by hand in front of it into the chamber and supports the head of the cartridge when fired. The bolt plug unites the parts of the bolt mechanism, and its rotation with the bolt is prevented by lugs on its sides coming in contact with the body.

The hook of the extractor engages in the groove of the cartridge case and retains the head of the latter in the countersink of the bolt until the case is ejected. The safety catch, when pushed forward, causes the mechanism to become inoperative. When drawn rearward, the end of the locking bolt enters a hole in the shank of the bolt lever and locks the bolt. At the same time the inner end of the spindle of the safety catch engages a cam cut in the cocking piece and draws the latter slightly to the rear, out of contact with the sear, and locks the striker.

The Bolt Mechanism

The bolt mechanism operates as follows: To open the bolt, raise the handle until it comes in contact with the left side of the body and pull directly to the rear until the top locking lug on the bolt strikes the bolt stop. Raising the handle rotates the bolt and separates the locking lugs from their locking shoulders in the body, with which they are brought in close contact by the gas pressure. This rotation causes the cocking cam of the bolt to force the striker to the rear, drawing the point of the striker into the bolt, rotation of the cocking piece being prevented by the rib on its lower side projecting through the slot in the bolt plug into its groove in the body. As the bolt plug remains longitudinally stationary with reference to the bolt, this rearward motion of the striker starts the compression of the mainspring, since the rear end of the latter bears against the front end of the barrel of the bolt plug, and its front end against the collar near the front of the striker. When the bolt strikes the body, the locking lugs have been disengaged, the striker has been forced about ¼ in. to the rear and the nose of the cocking piece catches in a notch at the terminus of the cam on the bolt. During the rotation of the bolt a rearward motion has been imparted to it by its extracting cam coming in contact with the extracting cam on the body, so that the cartridge will be started from the chamber. The bolt is then drawn directly rearward, the parts being retained in position by the nose of the cocking piece remaining seated in the notch in the bolt. To close the bolt, push the handle forward until the extracting cam on the bolt bears against the extracting cam on the body.

Ejection of the Shell

During the forward movement of the bolt the sear engages the cocking piece, the compression of the mainspring is completed and the nose of the cocking piece disengaged from the notch in the bolt, permitting the bolt handle to be turned down to the locked position. After firing, when the bolt is drawn rearward, the ejector is forced by its spring to the right, into the path of the cartridge, the rear end of which strikes the ejector and is ejected to the right from the body.

It will be noticed that in this system of bolt mechanism the seating of the cartridge in the chamber and the starting of the empty case from the chamber are entirely done by cams, the compression of the mainspring being accomplished partly by cams and partly by the pushing forward of the bolt. The arm may be cocked only by raising the bolt handle, pulling the bolt rearward and again closing, there being no knob on the cocking piece whereby it can be pulled back by hand.

In firing, unless the bolt handle is turned fully down, the upward projecting stem on the front portion of the sear strikes the under side of the bolt and prevents pulling the sear out of engagement with the cocking piece. When the bolt handle is turned fully down, this stem enters a slot in the under side of the bolt, permitting the complete disengagement of the sear from the cocking piece. This prevents the possibility of a cartridge being fired, and causing injury to the user, before the bolt is fully closed.

Charging the Magazine

The magazine may be charged either by cartridges held in a clip, or one at a time. To fill the magazine, the bolt is drawn fully to the rear, the cartridges are inserted at the top and the bolt again closed, the top cartridge being pushed thereby out of the magazine and into the chamber. When the bolt is again drawn rearward, the second cartridge in the magazine rises in front of the bolt, and so on until the magazine is emptied. As the bolt is closed, the top cartridge is held up during its passage forward by the pressure of those below. The last one in the magazine is held up by the magazine platform, the rib of which directs it into the chamber.

The magazine chamber is made wider than a single cartridge, but not wide enough for two, so that the cartridges lie in it staggered, three on one side and two on the other, when the magazine is full. There is no magazine cutoff on this arm; and in order to use it as a single loader when the magazine is full, it is necessary to place a cartridge in the chamber by hand and then depress the column of cartridges in the magazine with the thumb while the bolt is pushed forward over the head of the top cartridge. The arm can be readily used as a single loader with the magazine empty. In magazine fire, when the last cartridge has been fired and the bolt drawn fully back, the magazine platform rises and holds the bolt open to show that the magazine is empty.

U.S. AUTOMATIC MACHINE RIFLE—CALIBER 30, MODEL 1909

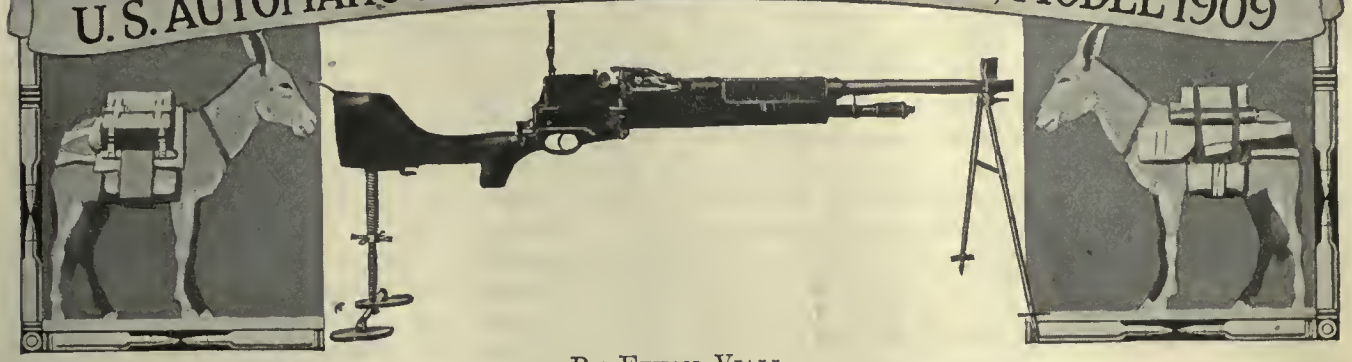

By Ethan Viall

SYNOPSIS—*This type of automatic rifle is air-cooled, but the radiating surface is not covered as in the Lewis gun. The feeding strips also differ from most others, which as a rule use belts. Sufficient details are given to insure a clear understanding of the mechanical action.*

THE automatic machine rifle, caliber .30, model of 1909, belongs to that type of automatic arms known as the gas operative. The power that is used to operate the mechanism is obtained from a small portion of the powder gases that enter through a port in the barrel after the bullet has passed. After the first shot the rifle is self-operative, until the ammunition in the feed strip is exhausted or until the trigger is released.

The ballistics of the automatic machine rifle, caliber .30, model of 1909, are similar to those of the service rifle. The bullet suffers a slight decrease in muzzle velocity due to the gas used in operating the rifle, but for general purposes the data quoted for the service rifle are sufficiently accurate.

In firing, the action of the mechanism is as follows: When the rifle is fired and the bullet has passed the gas port in the barrel a part of the powder gas passes into the chamber of the gas-nozzle ring, and enters the gas cup of the actuator, forcing the latter to the rear. The actuator in recoiling compresses the actuator spring, the cam surface cut in its upper portion engaging the lug of the fermeture nut, causing the latter to rotate so as to disengage its threads from those of the breechblock. At this part of the recoil the firing pin, which has been drawn back by the actuator, engages its upper lug in the ramp of the receiver. The firing pin then rotates on its axis and its upper lug comes to rest in the transverse cut of the breechblock, thus locking the latter to the actuator. The large lug of the actuator strikes against the shoulder of the breechblock, drawing the latter to the rear and thereby completing the opening of the breech. The claw of the extractor engages the groove of the cartridge case and draws it from the chamber. During the recoil of the breechblock the head of the cartridge case strikes against the ejector, throwing the case out of the rifle through the ejection opening in the receiver. When the actuator is partly recoiled the cam surface cut on its right side engages the upper lug of the feed piece, causing the latter to rotate from right to left on its axis. The feed arm of the feed piece engages its feed lug in the central opening of the feed strip, forcing the latter into the rifle and placing a cartridge in the loading position in front of the chamber. The pawl of the feed-piece spring engages in the lateral openings of the feed strip, thereby holding the latter in place and preventing it being drawn to the right when the feed arm of the feed piece, having advanced the feed strip one notch, returns to its original position by sliding over the feed strip in order to engage in the next hole. Finally, when the actuator is almost recoiled (supposing the rifle to be set for single shots), the sear engages in the cocking notch of the actuator and the latter is held back ready for the next shot.

The Trigger Action

When the trigger is pulled the sear is disengaged from the actuator, which, now being free, is thrown forward, due to the force exerted by the actuator spring. During this movement the actuator carries forward the breechblock, to which it is connected by means of the large lug of the firing pin. The breechblock strikes the cartridge, forces it into the chamber, and the claw of the extractor engages the groove of the cartridge case. As soon as the breechblock engages the fermeture nut the large lug of the firing pin engages in the ramp of the receiver, causing the firing pin to rotate so as to disengage this lug from the transverse cut of the breechblock. The firing pin is then free and may move forward. The actuator continues its forward movement and its cam face engages the lug of the fermeture nut, rotating the latter so as to cause its threads to engage with those of the breechblock. The breech is now closed and locked. The firing pin striking the primer fires the piece. During this forward movement of the actuator, the small cam surface cut on its right side engages the lower lug of the feed piece, causing it to rotate from left to right. The feed arm is actuated by this movement, and its feed glides over the feed strip and engages in the next opening of the latter, ready to feed the feed strip another notch into the rifle when the actuator again recoils.

The maximum fire obtainable with this arm is about 400 shots per minute. The rapidity of fire can be regulated to some extent by the regulator. The weight of the complete rifle is 30 pounds.

The ammunition used in this rifle is the same as that provided for the United States rifle, caliber .30, model of 1903. It is fed into the rifle by means of feed strips,

Copyright, 1917, McGraw-Hill Publishing Co., Inc.

nolding 30 cartridges each. The cartridges are located in the feed strips by means of a loading tool. The feed strips are made of sheet steel, spring tempered. On each strip are punched three rows of large clips, which hold the cartridges longitudinally, and one row of small clips, which align and hold the cartridges transversely. Ten feed strips are packed in each ammunition box.

The parts of the rifle are assembled into the following groups: The barrel group, the receiver group, the firing-mechanism group, the feed-mechanism group, the locking-mechanism group, the guard group, the stock group, the elevating-mechanism group, the hand-guard group, the barrel-rest group and the rear-sight group.

The Barrel Group

The barrel group contains the barrel, radiator, gas-nozzle ring, front-sight carrier, gas-cylinder support, regulator and front sight, front-sight cover, front-sight screws and cover-screws.

The barrel is chambered and rifled the same as the barrel for the United States rifle, caliber .30, model of 1903. The rear portion of the barrel is turned down to provide seats for the radiator and the gas-nozzle ring, and the front end for the seat for the front-sight carrier. In rear of the radiator seat are the locking lugs, two interrupted annular rings divided into three sectors, which engage in similar lugs of the locking nut and secure the barrel to the receiver. On the lower exterior surface of the barrel and in the rear of these locking lugs is a small lug which fits in a slot in the receiver. This small lug assures the alignment of the receiver and the barrel, also of the gas-nozzle ring and the actuator. The rear end of the barrel is turned down for the fermeture nut, which fits over the end of the barrel in assembling. On the upper surface of the rear end of the barrel is a small bevel cut which guides the cartridge into the chamber, and on the left side is the clearance cut for the claw of the extractor and extractor housing on the breechblock. A gas orifice or port is drilled through the underside of the barrel at the seat for the gas-nozzle ring.

The radiator is about 7½ in. in length and has cut on its exterior surface a series of deep grooves. The center of the radiator is bored out to a diameter somewhat less than that of its seat on the barrel and is shrunk in place and secured by the radiator pin. The bottom of the radiator is slabbed off for clearance. To its rear end, near the bottom, is assembled the locking-nut stop. The purpose of the radiator is to aid in the rapid radiation of the heat developed during firing.

Details of Gas-Nozzle Ring

The gas-nozzle ring is assembled to the barrel in front of the radiator and is shrunk in place and secured by the gas-nozzle ring pin. A small hole is drilled from the bottom of the gas-nozzle ring to connect with the gas port in the barrel. The exterior of the hole is closed by the orifice screw. The rear end of the lower portion of the gas-nozzle ring is shaped to form a nozzle and the front end is shaped to form a gas chamber. The nozzle is of circular shape to fit the gas cup of the actuator, and through its center is drilled a small hole into the gas chamber, intersecting the vertical hole drilled from the bottom of the gas-nozzle ring to the gas port in the barrel. The interior of the gas chamber is bored out and tapped near the front end for the regulator piston, and its exterior is graduated to aid in adjusting the regulator sleeve. On the rear upper face of the gas-nozzle ring is a horizontal lug on which the front stiffening piece of the hand guard rests when the latter is assembled.

The front-sight carrier is secured to the front of the barrel by the sight-carrier pin. On the upper part of the front-sight carrier is a dovetailed transverse slot for the front sight. In front of this slot is drilled and tapped a hole for the front-sight screw. On the underside of the front-sight carrier is a pivot which provides the means for the attachment of the barrel rest. On the front of the pivot is a recess into which the plunger of the barrel rest enters and secures the latter in position.

The gas-cylinder support, designed to prevent injury to the gas-nozzle ring during transportation, is assembled to the gas chamber of the gas-nozzle ring, and is secured by the gas-cylinder support pin, the ring on its lower part slipping over the gas chamber and the U-shaped upper part resting against the barrel.

Regulator Has Several Parts

The regulator consists of the regulator sleeve secured to the regulator piston by the regulator sleeve pin. The regulator piston is a cylindrical bar having on its rear end three annular piston rings which fit the gas chamber of the gas-nozzle ring. The purpose of these rings is to check the escape of gas to the front and to collect dirt, etc. The center section of the regulator piston is threaded to fit the thread in the gas-nozzle ring; its front end has a square head to aid in adjusting, disassembling and assembling. The regulator sleeve fits the cylindrical part of the regulator piston in rear of the square head and is pinned thereto. The regulator sleeve covers the piston back to and including the thread on the center section, sufficient space being had between the regulator piston and the regulator sleeve to permit the front portion of the gas-nozzle ring entering with a reasonably close fit. A tongue is milled in the barrel of the regulator sleeve and provided with a small projection on the inside, near the rear, which engages in a longitudinal groove on the underside of the gas-nozzle ring and prevents the sleeve from rotating after adjustment. The front end of the regulator sleeve is knurled, so that it can be more easily turned by the hand.

Purpose of the Regulator

The purpose of the regulator is to increase or decrease the size of the gas chamber of the gas-nozzle ring, thus controlling the velocity of the rearward movement of the actuator in order to allow for adjustments for various powder pressures, or for a desired increase or decrease in the rapidity of fire.

The front sight has on its upper portion a thin leaf slightly beveled to the front, and on each side is cut a circular groove to better define the sight proper. On the lower portion is a dovetail lug which engages in the dovetail groove of the front-sight carrier. This method of assembling the front sight and front-sight carrier permits of adjustment for deflection, and after the rifle is targeted the hole in the front-sight carrier for the

front-sight screw is extended into the front sight and the front-sight screw inserted. Over the front sight is placed the front-sight cover, secured by the cover screws.

The receiver group consists of the receiver, ejector bushing, rear feed guide, front feed guide, bottom plate, feed-piece housing cover and rear-sight fixed base; these parts constitute a receiver when issued, and are permanently attached to the receiver by rivets or screws. In assembling, components are assembled as follows: Closing spring, ejector, ejector spring, ejector cap, cartridge stop, cartridge-stop spring, cartridge-stop holder, cover plate, cover-plate washer, cover-plate screw, feed piece, feed-piece spring, windage screw, rear sight, telescopic sight bracket, fermeture nut and locking nut.

The Receiver

The receiver is a large steel forging, which contains the firing, feed and locking mechanisms, and also provides means for the assembling of the barrel, the guard, the hand guard and the rear sight. In the front end of the receiver is drilled a large hole which is the seat for the fermeture nut and the barrel. A slot on the lower side of this hole is for the purpose of locating the barrel and for assembling the fermeture nut. In rear of this slot is a recess for the lug of the fermeture nut. The front end of the receiver is threaded on the exterior for the locking nut, which secures the barrel to the receiver.

In rear of the threaded section is drilled a small hole, into which the end of the locking screw enters. On the top and directly in the rear are permanently assembled, by means of the feed-guide assembling screws, the front and rear feed guides, between which slides the feed strip during the firing. The front feed guide contains a narrow slot, in which the feed strip slides, and a large opening on the right for the cartridges. On top and at the right are two undercut slots, slightly beveled, into which is assembled the feed-piece spring. On the left is drilled and tapped a hole for the cover-plate screw. The rear feed guide has a narrow slot for the feed strip and also the cartridge opening on the right. On the left is a dovetailed groove for the cover plate and on the right the seat for the feed piece. This seat consists of a hole drilled vertically in the rear feed guide with an opening in its rear for assembling the feed piece. A large lug to the left of this hole, on which the feed piece slides during the firing, and a smaller lug on the right inclose the seat. On top to the right of dovetail groove is an opening under large lug through which the feed-piece spring pawl passes in assembling.

Cover Plates and Screw

The feed guides are braced on the left by the cover plate, which is secured to the front feed guide by the cover-plate screw and to the rear feed guide by the dovetail slot. The cover-plate screw is held securely by means of a split washer under head of screw, preventing its working loose from vibration in firing. On the front of the rear feed guide, just below and to the right of the dovetail slot, is assembled the cartridge base stop, which limits the movement of the cartridges to the left. In front of the rear feed guide is a tongue which enters between the feed strip and the cartridge and forces the latter downward. To the bottom and the front half of the receiver is securely riveted the bottom plate. The latter has on its lower surface two locking lugs, into which fit the trunnions of the guard. On top of the receiver and directly in rear of the feed guides is an undercut dovetail groove, in which is assembled the rear-sight fixed base, the latter being secured in position by the fixed base screw. The rear-sight fixed base contains the pivot lug for the movable base, the undercut for the windage screw and the lip on the front end of the movable base, and a lug on the rear end, which forms the undercut for the lip on the rear end of the movable base.

Wind-Gage Graduations

Upon its rear upper surface are two zero marks for the wind-gage graduations. On the left side of the receiver is the ejection opening. Above this opening is drilled and tapped the seat for the cartridge stop. In the rear of the ejection opening is the dovetail seat for the telescopic sight bracket, the latter being secured to the receiver by three sight-bracket screws. On the right side of the receiver is the feed-piece housing cover, which is attached to the bottom plate by the hinge pin. The former is held in its closed position by the closing spring which is inserted in the housing of the bottom plate. In the bottom of the housing of the bottom plate is drilled a small vertical hole in which is inserted the lower end of the feed piece. The ejector bushing is driven into a seat directly below the rear feed guide and has an opening on its left end for the ejector, while on the right are four small lugs, recessed to receive the lugs of the ejector cap.

The interior of the receiver has in its front section the seat for the fermeture nut, which is beveled in the rear to insure that the fermeture nut is always centered.

Within the rear section on the sides are the breechblock guide slots, while on the top and to the left is the guide for the firing pin which, ending in two cams, causes the firing pin to rotate in and out of its recess in the breechblock.

In the rear and bottom part of the receiver are the locking-lug seats for the guard. On the left of the receiver near the rear end is a small hole, drilled and tapped, into which is screwed the locking screw for securing the guard to the receiver. A small slot in front holds the locking screw in place. Two beveled undercut grooves in the front of the receiver provide seats for the assembling of the hand guard.

The Firing-Mechanism Group

The firing-mechanism group consists of the actuator, actuator spring, breechblock, firing pin, extractor and extractor spring. The actuator is located below and parallel to the barrel and is the piston which drives the mechanism of the rifle. It has on its upper surface a long straight cut and in the rear two diagonal cam cuts in which moves the lug of the fermeture nut. In the rear of these cams is cut a deep recess in order to reduce the weight of the actuator. In rear of this recess is a large lug, the center section of which is cut away for the lower lug of the firing pin. On the front end of the actuator is the gas cup, which fits over the nozzle end of the gas nozzle ring. On the right side of the actuator are two cam surfaces, upon which move the upper and lower lugs of the feed piece in recoiling and

counter-recoiling. Near the front end of the upper cam surface is a dismounting notch for the feed piece. On the left side of the actuator is the clearance cut for the trigger and on the bottom is the sear notch in which the sear engages when the rifle is cocked. On the lower surface, at the rear end is a slight ramp on which the sear rides near the end of recoil. On the right and left sides, and also on the lower surface of the actuator, are guides or bearing surfaces to control the movement of the actuator during recoil and counter-recoil.

The Actuator and Spring

The actuator is hollow nearly its entire length, the rear portion forming a housing for the actuator spring. About midway between the ends of the actuator is secured the actuator bushing. This bushing, which is threaded and screwed in position and secured with a pin, serves as the front seat for the actuator spring and also forms a seat for the lugs on the front end of the cocking handle when the latter is used to retract the actuator.

The actuator spring is a long spiral spring located in the interior of the actuator, with its front end resting against the actuator bushing and its rear end against the actuator spring seat in the guard. As the actuator recoils, this spring is compressed and the energy stored up is used to move the actuator forward at the end of the recoil.

The breechblock contains the firing pin, extractor and extractor spring. The breechblock rests on the bottom of the guide slots in the receiver, the large lug on the actuator entering a long longitudinal slot in the rear part of the breechblock. At the rear end and left side of this long slot is a deep recess into which the upper lug of the firing pin rotates whenever the breechblock is in motion. In front of this long slot the breechblock is cut away as clearance for the cartridge stop, while at the top and rear end of the slot is a small ramp to aid in disassembling and assembling the firing pin. On the right and left sides of the breechblock at the rear are guides that move in the guide slots of the receiver. On the front section of the breechblock are interrupted threads divided into three sectors, which engage those of the fermeture nut and securely lock the former to the latter during firing.

Extracting Mechanism

On the right side of the breechblock is a long clearance cut for the ejector. On the left-hand side of breechblock at the front end is the housing for the extractor; under this housing at the end of the breechblock is a stud, which acts as a seat for the curved surface on the bottom of the extractor at the rear of the extractor claw, preventing extractor from pitching too far toward center of breechblock to readily pass over cartridge case. On the inside of the housing a bevel cut is the working point for the bevel cut on top of the extractor when firing the rifle. The rear end of the housing forms a seat for the shoulder on the extractor after the extractor is worn on the bevel surface and on the bottom, thus increasing the life of the extractor. At the rear of the housing is a slot for the extractor and extractor spring; at the rear end of this slot is the extractor spring seat. On the left side back of the extractor spring seat the breechblock is cut away to fa-

DETAILS OF UNITED STATES AUTOMATIC MACHINE RIFLE, CALIBER 30, MODEL 1909

The view above shows the details of the principal working parts, with the proper name for each

cilitate the assembling and dismounting of the extractor and extractor spring.

At the front end of the breechblock on the upper rim a shallow seat is cut for carrying the cartridge into the chamber. The ends of rim on each side of ejector groove are slightly closed toward center of the breechblock to insure a good grip of cartridge case. The front end of the breechblock is counterbored for the head of the cartridge, and in the center of this head space is drilled a small hole for the firing-pin point. The interior of the breechblock is bored out for the barrel of the firing pin.

The firing pin is seated within the breechblock. The front portion is cylindrical, terminating at the front end of the firing-pin point, and has on its rear end a small and a large lug. The small lug is on the underside and rests, when assembled, in the recess of the large lug on the upper part of the actuator. This small lug causes the firing pin to move to the rear in the first motion of recoil. The large lug is on the upper side and has on its top two cam cuts, which move in the cam cuts in the receiver and serve to rotate the firing pin in and out of the recess in the breechblock. The front shoulder of this upper lug rests against the front of this recess during counter-recoil and carries the breechblock forward, the upper lug on the actuator bearing against the rear end of the barrel of the firing pin. The bottom and rear end of the upper lug is beveled to permit assembling and disassembling.

The extractor is an irregular bar having on the underside of its forward end a claw and on the upper side of the forward end an incline which seats against the underside of extractor housing of the breechblock, when passing over rim of cartridge case. At the rear end of the extractor is a pivot on which the extractor spring seats and forces the extractor downward over the cartridge head. When the breechblock strikes the cartridge in loading, the extractor is forced backward until the claw drops into the cannelure of the cartridge.

The extractor is assembled to the breechblock by slipping the extractor spring over the pivot on the rear of the extractor, inserting the front end of the extractor in the opening in rear of the extractor housing and gradually forcing the extractor and spring into place with the dismounting tool. The position of the extractor is determined by the small bevel cut on top of the extractor, the convex cut on underside of extractor housing and shoulder on the extractor. When in action the pivot on the extractor is bent slightly, so the pressure of the extractor spring forces it into proper location. The extractor and spring may be dismounted either by use of the dismounting tool or by engaging a small screwdriver behind the extractor spring in the small slot provided in the extractor seat of the breechblock.

The Feed-Mechanism Group

The feed-mechanism group consists of the feed piece, the feed-piece spring, the cartridge stop, the cartridge-stop spring, the cartridge-stop holder, the ejector, the ejector spring and the ejector cap.

The feed piece is of irregular shape, having at its upper end a feed arm, on the end of which is a pointed lug which engages in the central opening of the feed strip. On the top of the feed piece is a small lug, which holds the feed-piece spring in position. On the feed arm, near this lug, is a small cut into which the feed-piece spring stud drops when the feed arm is moved to the left. Near the lower end on the shaft of the feed piece are two lugs, one above the other, that move on the cam surfaces of the actuator and give rotation to the feed piece. When the last cartridge in a feed strip has been fired the feed piece drops down, due to pressure of the feed-piece spring, and the lower lug then prevents forward movement of the actuator. The lower end of the feed piece is cross-milled to prevent the finger slipping when the feed piece is raised. Between the lugs and the feed arm a portion of the shaft is made flat, in order to facilitate assembling. The feed piece when assembled in the rifle is held in a vertical position by the opening in the bottom of the housing on the bottom plate and the circular opening in the rear feed guide on the receiver.

Feed-Piece Spring Is Made of Sheet Steel

The feed-piece spring is an irregularly curved spring of sheet steel. On its front end is riveted the feed-piece spring button, for use in the disassembling and assembling of the spring, and at the rear and left side is riveted the feed-piece spring pawl. The latter is pointed on its left side; and as the feed strip moves to the left, the feed-piece spring pawl engages in the rear openings of the strip, thus preventing the feed strip from moving to the right. At the same time the pawl forces the cartridge slightly downward out of the feed strip. On the right side, near the rear, is riveted the feed-piece spring stud, while directly in rear of this stud is a small opening through which passes the small lug of the feed piece. As the feed piece rotates, the upper surface of the feed arm strikes against this spring stud and slightly raises the feed-piece spring, thus allowing the pawl to ride over the feed strip. The feed-piece spring is assembled to the receiver by forcing it into the under-cut grooves on the right side of the front feed guide.

The Cartridge Stop

The cartridge stop is a short cylindrical piece with a blunt conical point, and is seated in the receiver just above the ejection opening. It is held in position by the cartridge-stop spring and the cartridge-stop holder, the latter containing a small opening through which the end of the cartridge stop projects. The holder is also threaded for the purpose of assembling it to the receiver. The principal function of the cartridge stop is to limit the movement of the cartridges to the left and to properly align them. It also indicates, in loading, whether or not the feed strip has been fully inserted.

The ejector is assembled in the ejector bushing of the receiver and is held in position by the ejector spring and the ejector cap. The ejector cap is circular in shape, having on its circumference four small lugs which engage in corresponding slots in the ejector bushing. Special attention should be paid to the assembling of the ejector cap, being sure the small lugs on the sides of the cap are properly located in the slots provided for them in the ejector bushing; failure to properly locate these lugs will result in the ejector cap being forced outward against the feed piece and prevent the forward movement of the firing mechanism. On the top

of the ejector cap are cut two slots at right angles to each other, into which fit the ejector key used in dismounting and assembling. In the center of the cap is a small hole which allows the end of the ejector to protrude.

The Locking-Mechanism Group

The locking-mechanism group is made up of the locking nut, the fermeture nut and the locking screws. The locking of the mechanism by the locking nut is more permanent in its nature, while that of the fermeture nut is a continuous locking and unlocking for each round fired.

The locking nut is cylindrical in shape, having two interrupted annular rings of three sectors each on the inside to provide means for locking the barrel to the receiver. In rear of these locking rings is cut the thread for assembling the locking nut to the receiver. Two small recess cuts are made on the front end of the locking nut for dismounting wrench, and also a large cut for clearance and stops for the locking-nut stop on the radiator.

After the barrel is locked in position, the locking nut is secured by one of the locking screws, which is inserted in the small hole drilled and tapped on the left side near the rear end of the locking nut, the end of the locking screw entering a small hole on the left side of the receiver directly in the rear of the threads. The other locking screw is used for locking the guard to the receiver. In front of the locking-screw seat in the locking nut is a small lug with a shallow slot which secures the locking screw in position. On the right side of the locking nut is the hand-guard stud, which holds the hand guard in place while the barrel is being removed. The rear of the locking nut has seven slots, which insure a tight fit on the receiver.

The fermeture nut is cylindrical in shape and has on its underside a large lug which moves in the cam cuts on the upper surface of the actuator. The front end of the fermeture nut is counterbored to receive the barrel, while directly in rear are interrupted threads divided into three sectors for locking the breechblock. The left sector of the fermeture nut is enlarged to allow passage of the extractor housing of the breechblock. An enlarged recess is provided as clearance for the extractor housing as the fermeture nut rotates. Between the lower and right-hand sectors is a deep cut which provides a cavity into which primers may drop should they become dislodged from the cartridge case during firing.

Function of the Fermeture Nut

On the top of the fermeture nut there is a long longitudinal cut from the rear, providing clearance for the cartridge in loading; near the left rear end is a semicircular cut, providing clearance for the front clip of the feed strip; and on the top and right is the clearance for the feed strip. The rear shoulder of the fermeture nut is beveled to enter the corresponding bevel in the receiver. The function of the fermeture nut is to lock the breechblock at the instant of firing and to unlock it immediately after firing. The fermeture nut is located in the forward part of the receiver, directly in rear of the barrel, and is held by a shoulder on the barrel and a similar shoulder in the receiver, so as to prevent any longitudinal movement but to permit of rotation about its axis.

The guard group consists of the guard, actuator-spring seat, latch spring, cocking handle, sear, sear spring and trigger. The guard, when assembled, closes the rear end of the receiver and supports the stock. It is secured to the receiver by trunnions on its front end which enter the locking lugs on the bottom plate, and also by locking lugs on each side in the upper part of the guard near the rear, which enter seats on the interior of the receiver. It is secured in its seat by one of the locking screws, which enters the guard through the locking-screw hole of the receiver. Within the guard are the recess and seat for the sear, and in rear of this a long slot for the trigger. Under the latter slot is the trigger bow. In the upper part of the guard is a longitudinal hole in the top and bottom of which are two slots, in which the actuator-spring seat is placed. The latter is held in position by two large lugs on its perimeter and by two spring-seat pins which are assembled to the guard directly in front of the actuator-spring seat. Through the center of the actuator-spring seat is drilled and slotted a small hole with two small lugs 180 deg. apart. Through this hole passes the shank of the cocking handle, the lugs sliding in the longitudinal grooves of the latter. Three semicircular grooves cross the rear surface of the actuator-spring seat, by means of which the cocking handle is locked into its three positions. In rear of the actuator-spring seat is the locking-lug seat of the cocking handle. Under the opening for the actuator-spring seat is a rectangular opening for the tongue of the trigger. An arrow is stamped over the cocking-handle opening to aid in setting the latter in the desired position. On the rear of the guard are a short tang and a long tang, by means of which it is assembled to the stock. The latch spring is a flat steel spring assembled near the bottom of the long tang by the spring screw.

Cocking Handle Is a Member of the Guard Group

The cocking handle, consisting of the shank and knob riveted together, is located within the actuator and extends to the rear through the actuator-spring seat opening of the guard.

The front end of the cocking-handle shank extends into the actuator and terminates in a double-locking lug. In retracing the actuator by hand this lug bears against the actuator bushing. The rear portion of shank is provided with grooves which engage the two lugs on the interior of actuator-spring seat.

The cocking-handle knob has two locking lugs which serve to lock the guard to the receiver. These locking lugs are made with two projections which engage in the notches of the actuator-spring seat and thereby determine the position of "safety" or the kind of fire desired. On the rear of the cocking-handle knob is a circular disk, on the face and near the perimeter of which are stamped arrows which show the various firing positions. The position for firing automatically is marked "A," that for firing semiautomatically is marked "R," and that for safety is marked "S." An arm extends out from this disk with a ball handle by means of which the cocking handle is rotated into these positions and also assists in dismounting and assem-

oling. The disk of the cocking-handle knob is retained in position by means of two conical surfaces on its front face which engage in corresponding surfaces on the rear end of receiver. The disk of the cocking-handle knob has two notches cut therein. With the knob set at A, the position of the lower notch permits the tongue of the trigger to pass through, thereby allowing the trigger to be pulled directly to the rear. The hook on the forward end of the trigger engages the cocking arm of the sear, holding the cocking toe on the sear below the sear notch on the actuator. This position of knob will therefore give continuous or automatic fire.

With the knob set at R, the position of upper notch, which is provided with a cam surface, forces the tongue of the trigger downward as the trigger is pulled to the rear, thereby causing the trigger to release the sear for each shot. This position of knob will therefore give single shots. With the knob set at S, neither of the notches is opposite the tongue of trigger, and the latter can not, therefore, be pulled, and this position of knob is therefore known as the "safety position." With the knob set at C and D, the cocking handle can be drawn to the rear. This position of knob is used when it is desired to cock or draw back the actuator by hand and is also used when the mechanism is to be dismounted. To set for the different positions, the cocking handle is rotated until the particular letter corresponding to the position desired comes opposite an arrow marked on the guard.

The sear is made with a knurled button head and a spindle on which is the cocking toe, which engages in the sear notch of the actuator. The cocking toe has on its under side a deep recess; the spindle is made hollow and the head countersunk in order to reduce its weight. Underneath the cocking toe, assembled and riveted to the spindle, is the sear-spring lever, by means of which the sear spring is attached to the sear. Between the cocking toe and the knurled button head is the cocking arm, which stands in an upright position when the sear is assembled in the guard. On its top is a small cut in which the hook of the trigger arm engages. On the spindle are two flat cuts by which the sear is dismounted and assembled.

The trigger is of irregular shape, having a trigger arm with a hook on its forward end which engages in the cut on the cocking arm of the sear. This arm extends to the rear sufficiently far to limit the motion to the rear of the trigger, and is connected to the body of the trigger by a curved arm which offsets the trigger arm to the left, so that it will clear the actuator. The body of the trigger has a circular bevel cut in the front end where the sear-spring pin is assembled. From the bottom of the body extends the finger piece which passes through the slot in the guard. On the rear of this body is a tongue having on its upper surface a small ramp. This ramp, when the trigger is pulled to the rear, slides into slots cut in the disk on the cocking handle, which permits the trigger to move straight to the rear or causes it to tilt slightly downward or prevent it moving at all. These are the positions of automatic A, semiautomatic R, and safety S, respectively.

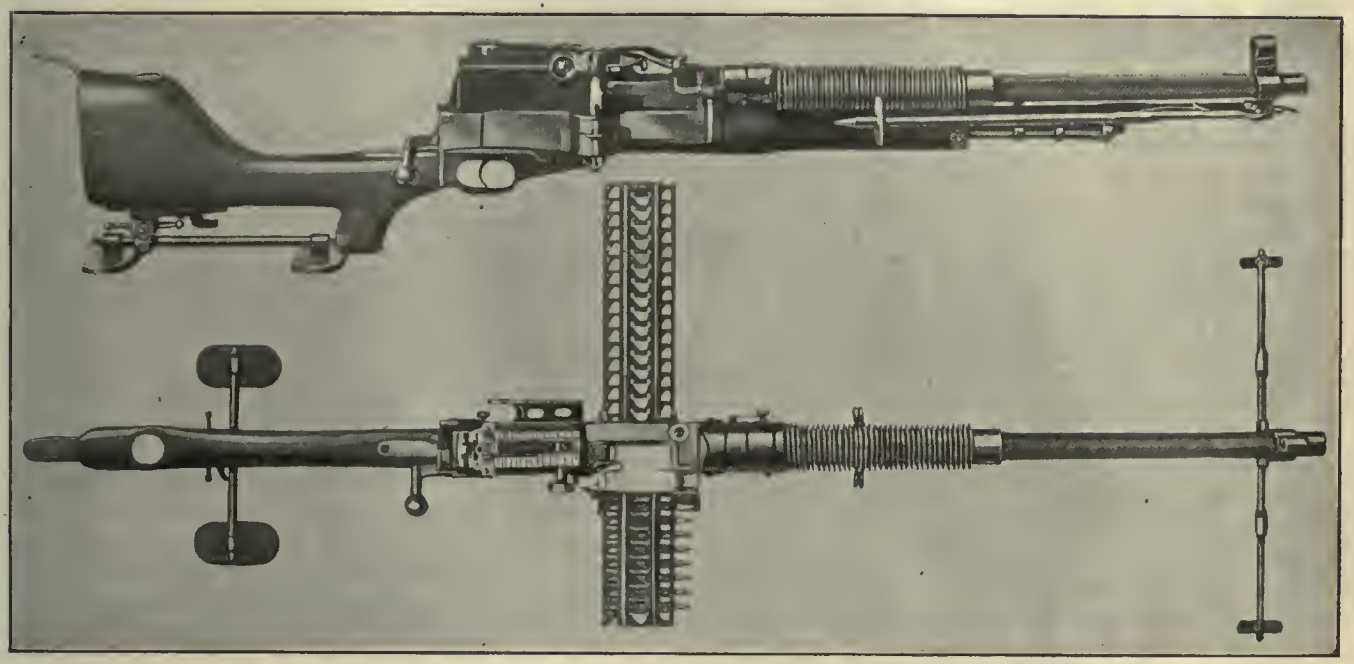

SIDE AND TOP VIEWS OF THE UNITED STATES AUTOMATIC MACHINE RIFLE

The Stock Group

The stock group consists of the stock, latch plate, elevating-screw tube and butt plate. The stock is made of well-seasoned black walnut, cut down in front so as not to interfere with the sighting. It has a pistol grip and is recessed in front for the tangs of the guard, a small hole being drilled at an angle about midway in the recess for the lower tang of the guard for the guard screw, and a larger hole being drilled perpendicularly through the stock near the rear end of the recess for the upper tang for the stock bolt. In the bottom and rear of this grip is a small recess for the end plug, a shallow groove for the latch spring, and the seat for the latch plate, the latter being secured by the latch-plate screw, a transverse hole being drilled for that purpose. In the rear end of the stock is assembled the elevating-screw tube with cap, in a hole drilled for this purpose, and the lower end then spun out over the

washer. In the bottom and rear of the stock are drilled two holes for the slide-guide pins and two smaller transverse holes, through the above holes, for the slide-guide-pin pins. Between the large holes and in front of the elevating-screw-tube opening is cut a small recess for the slide spring. On the front end of the stock is a small tenon which extends into the guard, taking the shock of recoil in firing.

The butt plate has two side tangs and is secured to the butt of the stock by two butt-plate wood screws and one butt-plate screw which passes through the tangs, holes being drilled in the rear end of the stock for the wood screws and a smaller hole drilled through the stock near its rear end for the butt-plate screw. On the upper end of the butt plate is a long tang for supporting the weight of the rifle on the shoulder when firing without the elevating mechanism.

The Elevating-Mechanism Group

The elevating-mechanism group consists of the inner elevating screw, the outer elevating screw, and the elevating-screw slide. The inner elevating screw consists of the elevating-mechanism guide rod, the end plugs, the elevating-mechanism feet and the inner elevating screw. The elevating-mechanism feet are flat pieces, oblong in shape, having on the top a large lug to which the elevating-mechanism guide rod is assembled. On the underside is a large recess, in the center of which is a small conical lug to prevent slipping. The end plugs are notched on the top so as to engage in the latch plate on the stock and thereby secure the elevating mechanism when in the traveling position. On the elevating-mechanism guide rod is assembled the inner elevating screw, and to its ends are riveted, by means of the elevating-mechanism foot pins, the end plugs and the elevating-mechanism feet. The body of the inner elevating screw is hollow, in order to reduce its weight, and has cut on its exterior a right-hand thread. At the lower end is a square head, through which a small hole has been drilled for the elevating-mechanism guide rod.

The outer elevating screw has on the exterior of its body a left-hand thread extending nearly to the bottom. On the lower end are four radial arms by means of which the outer elevating screw is rotated. On the interior of the body, near the bottom, is cut a right-hand thread to fit the corresponding thread on the inner elevating screw. Below and above this thread the interior is counterbored for clearance.

The elevating-screw slide is designed to lock the elevating mechanism when firing, and consists of the elevating-screw slide, the binder, the binder lever, the binder-lever pivot and the binder spring. To the elevating screw slide are assembled the parts just mentioned. Slightly in the rear of its center is the elevating screw opening, the rear end of which forms a half nut, which engages in the thread of the outer elevating screw. In front of this opening is a dovetail groove for the binder. In the rear end of this groove is assembled the elevating screw slide pin against which rests the binder spring, while in the front part is drilled a small hole for assembling the spring. In front of the binder slot is also drilled a hole into which is driven the binder lever pivot. Near each end of the elevating screw slide are the slots for the two slide guide pins, which secure the elevating screw slide to the stock. After the slide guide pins have been assembled the slide guide-pin pins are driven transversely through the stock and through a small hole in the slide guide pins, thereby securing the latter in position. In the recess of the stock under the elevating screw slide is assembled the slide spring.

The binder has on its upper side a dovetail lug containing a recess for the binder spring and the rear end is made to fit the body of the outer elevating screw. The binder is assembled to the elevating screw slide by means of the dovetail lug engaging in the corresponding groove on the slide.

The binder lever has on its left side a circular cam surface which moves against the front end of the binder. In the center of the circular cam surface is drilled a hole for the binder lever pivot, and to the right extends the lever arm, which is curved to the front so as to fit the finger. The rear of this arm is cross-milled to aid in operating the clamping device. A small lug on the upper surface of the binder lever limits the motion of the lever arm to the rear.

The binder lever pivot is the axis for the binder lever, and has its upper end turned down so as to have a driving fit in the pivot hole of the elevating screw slide, while its lower end forms an eccentric about which the binder lever rotates, the purpose of the eccentric being to take up the wear between the binder and the binder lever. On the bottom or head of the pivot is stamped an arrow which indicates the high point of the cam.

The outer elevating screw can be quickly inserted into or removed from the stock by drawing the elevating screw slide to the rear by the binder lever. In the traveling position the elevating mechanism is secured in front by the end plug engaging the latch plate on the stock and in the rear by the clamping device.

The Hand-Guard Group

The hand-guard group consists of the hand-guard body, front and body stiffening pieces, assembling plates, leg catches, and leg catch springs. The hand-guard body is made from a drawn-steel tube or from sheet steel pressed to shape and brazed. It is reinforced at the front end by the front and the body stiffening pieces which are securely riveted and brazed to the hand-guard body. In the forward part of the hand-guard body are punched a number of small holes which permit the powder gases to escape after impinging on the actuator. On the rear end of the hand guard are riveted the two assembling plates which seat in the undercut grooves in the front of the receiver. On each side of the hand guard are riveted the leg catches, under which the leg-catch springs are assembled. These catches support the front legs of the barrel rest when in the traveling position. When assembled the hand guard is held in position by the undercut grooves in the front of the receiver and the horizontal lug on the upper part of the gas nozzle ring. The purpose of the hand guard is to protect the gunner from escaping gases and also to provide protection from the moving actuator, thus insuring that all moving parts of the rifle are inclosed.

The barrel-rest group is made up of the following principal parts: The barrel-rest head, the plunger, the connecting piece male, the connecting piece female, the front legs, the front-leg feet, and the separators. The

barrel-rest head is a steel piece which serves as a sleeve to the connecting pieces, male and female, and into which the plunger, plunger ring and plunger spring are assembled. In the body of this head are two holes, one being a small, vertical hole for the pivot on the front sight carrier and the other a larger transverse hole for the male and female connecting pieces. On the top at each side the body of the head is cut away for the lug on the top of the front leg. In front of the pivot hole is drilled a longitudinal hole in which are assembled the plunger and plunger spring. The plunger secures the barrel seat to the pivot at the bottom of the front sight carrier. The plunger is held in place by the plunger ring, the latter being assembled through a hole in the front part of the plunger.

The connecting piece, female, is drilled and tapped on one end to match the thread which is cut on the body of the connecting piece, male. The outer ends of both connecting pieces are slotted for the front legs. The connecting pieces are assembled in the barrel-rest head, the front legs are then inserted into the slots and riveted in position by the front-leg axis.

The front leg is a long bar having at the top a flat lug. A notch is cut across this lug which bears against the connecting piece, and the barrel-rest head when the front legs are extended, and a hole is drilled through this lug for the front-leg axis. Above the center of the front leg is a section, larger in diameter than the remainder of the bar, in which is cut a deep slot for the separators, and at right angles to this slot is drilled the separator axis hole. At the lower end of the front leg is riveted, by the foot rivet, the front-leg foot, the latter being made with a flat plate, which prevents the front leg from sinking in soft ground.

The separators which hold the front legs in the extended position are riveted to the front legs by the separator axes. The separators are secured to each other by the separator bolt. The separator bolt is secured by the separator nut and the latter by the separator split pin. A small lug on the end of each separator enters a slot in the other separator and holds the legs extended.

The Rear-Sight Group

The rear-sight group is made up of the following principal parts: The movable base, the base spring, the leaf, the elevating screw, the slide, the half nut, the slide cap, the drift slide, the aperture disk and the windage screw. The movable base has on its upper surface two ears in which are the holes for the joint pin which serves as a hinge for the leaf. On the rear end of the movable base are the wind-gage graduations, each point of which corresponds to a lateral deviation of 4 in. for each 100 yd. Both ends have lips which fit the undercuts of the fixed base, the front lip having also a worm gear for engaging the thread of the windage screw. The base spring fits in the spring seat of the movable base.

The leaf is graduated from 0 to 2800 yd. On the right side of the sighting opening in the leaf are the groove and seat for the elevating screw, which is a long, thin screw, extending from the bottom of the sighting opening to the top of the leaf, where it is secured in the elevating screw head by the elevating screw pin. This elevating screw allows minute corrections for elevation and also holds the slide in position on the leaf by means of a half nut which is seated in the slide and the half-nut spring, the latter forcing the half nut against the thread on the elevating screw. The outer end of this half nut is knurled, and by pressing in on the knurled head the half nut can be released from the elevating screw and the slide quickly raised or lowered.

The rear face of the slide is cut out for the leaf, and the drift slide and the right half are made with a seat for the half-nut spring and the half nut. The right and left ends are drilled and tapped for the small slide-cap screw and the large slide-cap screw, which secure the slide cap to the slide. The front face of the slide is slotted and recessed for the pivot.

The slide cap has a circular cut in its upper surface which forms a recess for rotating the aperture disk, and also apertures for sighting and for reading the graduation on the leaf. The center is slotted for the pivot. On the right and left sides are drilled the holes for the small and large slide-cap screws. On the rear face at the bottom of the slide cap is the open sight.

The drift slide moves in the drift slots in the leaf. At the top is a small open sight, while just below are two openings, the upper for the pivot and circular lug on the aperture disk and the lower for a sighting aperture. The drift slide is held in place by a lug on its front face, which bears against the slide and by the lug which contains the open sight. This latter lug extends to the rear and bears against the top of the slide cap. On the lower edge of the open-sight lug is another small lug, which engages in the notches on the perimeter of the aperture disk, locking the latter in the desired position.

The aperture disk is a circular piece containing five sight openings, namely: Four peepholes, 0.04, 0.06, 0.08, and 0.10 in. in diameter, and one large aperture which contains an open sight. A circular lug on the front face engages in the central opening of the drift slide, thus causing the aperture disk to conform to the movement of the former. This lug is drilled and tapped for the pivot spring and the pivot. The purpose of the pivot spring is to force the aperture disk to the rear, so that one of the notches, which are cut on its perimeter, will engage in the small lug and prevent rotation.

The windage screw consists of the windage screw, the windage screw knob, the windage screw collar, the windage screw spring, and the windage screw pin. It is seated in the front part of the fixed base.

Preparing the Rifle for Firing

1. Remove rifle from the pack.
2. Free the front legs from the leg catches on the hand guard. Carry the legs forward until they are at right angles to the barrel, and then by a quick movement separate the legs to their full extent. Place the legs so that the muzzle points in the desired direction and force the feet into the ground.
3. Disengage the elevating-mechanism feet from the latch plate on the stock and turn them so that they will lie at right angles to the direction of fire.
4. Raise the rear-sight leaf. Cock the rifle by rotating the cocking-handle knob to the vertical position and then drawing the latter to the rear until the sear engages in the sear notch of the actuator.

5. Push the cocking handle forward, turn to the right and set at S, safety, until ready to fire.

6. Remove the feed strips from the ammunition box and place conveniently for loading.

Firing

1. Set rear sight for range and deflection.

2. Raise the feed piece to its highest position.

3. Load by inserting the loaded feed strip into the feed guides and push the former to the left until the first cartridge is against the cartridge stop, which is shown by the protrusion of the left end of the cartridge stop from the holder. Under normal conditions the rifle will be operated by two men, one doing the firing and the other doing the loading.

4. Unlock the elevating mechanism by rotating the binder lever to the right and rear. Raise or lower the stock to approximately the proper elevation. Release the elevating-screw slide, adjust the outer elevating screw to the proper elevation, and clamp by pushing the binder lever forward.

5. Turn cocking handle to R, repeater, or A, automatic, and fire the piece by drawing the trigger directly to the rear. By releasing the trigger while firing, with the cocking handle set at A, the firing can be stopped. The rate of fire can be controlled to some extent by the proper adjustment of the regulator. Upon normal conditions and for accurate firing the regulator should be so adjusted that there will be a minimum vibration. The maximum effect of the gas on the actuator occurs with the regulator set at O.

There is no normal setting for the regulator in the sense that settings for all guns under any conditions may be alike. The amount of lubrication, wear of parts, stiffness of springs, resizing of feed strips, temperature and various other conditions demand that varying adjustments for gas be made accordingly, regardless of settings for other guns or even of previous settings for the same gun. *Use only sufficient gas for the proper operation of the mechanism, and no more.* The proper setting will ordinarily be found anywhere between (first) the smallest setting that will give sufficient ejection of fired cases without cutting of the ejector into their heads, and (second) the largest setting which will still give enough travel to the actuator to prevent automatic firing with the cocking handle at R.

6. The barrel should be cooled by means of the cooling sponge after about 300 rounds of continuous firing. The rifle may be fired 1000 rounds without cooling, without serious injury to the barrel, but this should be avoided as far as possible.

The Lewis Machine Gun

By E. A. Suverkrop

SYNOPSIS—*The Lewis automatic machine gun, which has proved its worth in the present war, is a gas-operated device with a positive air-cooling system. The magazine is of the rotating-drum type, with a capacity of 47 cartridges. Its net weight is 26 pounds 12 ounces, while equipped with tripod mount and magazine it weights 30 pounds 2⅛ ounces.*

THE barrel is surrounded by, and throughout its length is in direct metallic contact with, an aluminum radiator. The radiator has high longitudinal radial fins, and it is inclosed in a steel radiator casing that is open at both ends and extends forward beyond the muzzle of the barrel. The barrel mouthpiece, secured to the barrel by a left-handed thread, contains a cup-shaped aperture designed to direct the muzzle blast into the forward extension of the radiator casing so as to induce suction of air from breech to muzzle inside the radiator casing and along the surface of the fins. Near the barrel muzzle and in its under side is a port through which powder gas at barrel pressure is admitted during the time required for the bullet to pass from the port to the muzzle. The powder gas passes into a gas chamber and thence into a gas cylinder beneath the barrel and parallel with it, in which it drives a piston rearward. The piston is pinned securely to the rack, which is provided with teeth on its lower surface meshing with teeth in the periphery of the gear.

The receiver is secured to the barrel by a large square thread and is pierced longitudinally by two bores, one above the other. These bores are connected by a narrow slot from the rear of the receiver almost to its front end. The piston travels in the lower bore of the receiver, which forms a rearward extension of the gas cylinder under the barrel. The upper bore in the receiver forms the boltway in which the bolt travels. The bolt is suspended on and operated by the striker post at the rear end of the rack. The striker is pinned in the striker post, which fits into a cam slot in the bottom of the bolt. This slot is cut away toward the axis of the bolt for the striker, and the face of the bolt is pierced axially from this slot to permit the striker to reach the primer of the cartridge in the chamber. Suitable delays in the action, after locking the bolt and before firing, and after firing and before unlocking, are provided by the longitudinal portion of the slot for the striker post in the bottom of the bolt. Locking and unlocking are accomplished by the cam angles at the rear of the slot in the bolt. Breech closure is by rotary locking, the breech bolt having four locking lugs that are turned in the corresponding locking recesses in the receiver. Under the receiver at its front end is fitted the gear case, which contains the gear and the mainspring. The latter is of the ribbon type and is wound up on the opening, or rearward, stroke of the action by the meshing of the teeth of the gear with the corresponding teeth under the rack. The spring tension so obtained is the means for the closing stroke of the action by rotating the gear in the opposite direction and so driving the rack, which is part of the piston, forward.

Above the receiver and pivoted on the magazine post is the feed-operating arm. It is driven by the upper lug of the feed-operating stud (attached to the rear of the bolt and with its upper lug traveling in a slot through the upper surface of the receiver), which engages a groove under its curved rearward extension so as to swing the feed-operating arm to the left during the opening movement of the bolt and to the right during its closing movement. The feed pawl on the feed-operating arm engages and rotates the magazine, and the cartridge opening in the feed-operating arm receives and guides the cartridge delivered to it.

The feed cover is secured to the top of the receiver. At the rear end it carries the rear sight base, and

under its front edge are fitted the stop and rebound pawls and their spring. The function of the stop pawl is to engage with an outer projection of the magazine pan, which is rotated by the feed pawl on the operating arm, and prevents too great a movement. The rebound pawl engages with another projection of the magazine pan and prevents its rotation in the reverse direction, so that the magazine is accurately indexed and positively locked by each cycle of operation. A forward projection at the left side of the feed cover carries the cartridge guide, to which the feed-operating arm delivers the cartridge in loading.

The bolt carries two extractors lying in recesses in its top and side, and the ejector is pivoted in a recess in the receiver at the left of the boltway. The piston is operated by hand by the charging handle, which is fitted in it at the rear of the receiver when the buttstock is removed and which travels in the slot in the left side of the receiver. The safety is a plate sliding vertically in ways on the left side of the receiver. In its upper edge are two recesses designed to engage with the charging handle, one in its foreward (uncocked) and the other in its rearward (cocked) position. To put the gun when cocked on safe, raise the safety and pull the trigger. The charging handle engages in front of the recess in the safety and prevents its accidental movement. This locks the gun against operation or discharge. To put the gun in action, draw back the charging handle to cock and press the safety down. The safety also, when raised, closes the slot in the left side of the receiver, in which the charging handle travels, and prevents sand, mud, dust, etc., from getting into the action.

The trigger is contained in the guard, which is a pistol-grip form. It is attached to a sear which, when the trigger is released, engages a notch in the under side of the rack and holds the action open at the very beginning of the closing stroke. The buttstock is usually of a form similar to a rifle buttstock, but a spade grip may be supplied. Either rifle buttstock or spade grip is attached by interrupted thread to the boltway in the rear of the receiver. The butt-tang or spade-grip tang locks up the entire rear end of the receiver and takes the thrust of the recoil of the piston.

The Magazine

The magazine is a circular steel drum in which the cartridges are arranged radially, bullet ends toward the center. The magazine center is of aluminum. It has a deep spiral groove in it, in which the bullet ends of the cartridges engage and by which they are controlled. When the magazine is latched in place on the magazine post, the mazakine center is keyed to the magazine post and held stationary. The magazine pan carrying the separator pins and the cartridges is rotated around the center during the operation of the gun, so that the spirally arranged column of cartridges is driven down the groove of the magazine center until each cartridge is successively reached by the feed-operating arm.

The action of the gun is as follows: Commencing with the gun in the "ready to feed" position, a filled magazine being latched on the magazine post and the charging handle having been drawn fully to the rear by hand so that the sear engages the rack and holds it back, the trigger is pressed. This releases the rack, which is driven forward by the spring-actuated rotation of the gear.

The striker post, by pressure of its neck against the left side of the cam slot in the bolt, drives the bolt (which cannot be cammed around because of its lugs traveling in the correspondingly shaped grooves in the boltway) straight forward in the boltway. The feed-operating stud carried forward with the bolt cams the feed-operating arm to the right, the feed pawl slipping over a projection on the rim of the magazine and engaging behind it. The spring stud on the feed-operating arm presses the stop pawl back to prevent its intercepting a projection of the magazine. The head of the bolt now reaches the head of the ejector, which it presses back into the ejector cut, causing the rear of the ejector to be pivoted out into the boltway behind the bolt. The face of the bolt now strikes the base of the cartridge, which is held ready for it in the loading ramps of the receiver, and it drives the cartridge before it into the chamber. The extractors spring over the rim as soon as the cartridge seats. Just as the cartridge seats, the locking lugs of the bolt clear the front of the cruciform part of the boltway formed by their guide grooves an reach their locking recesses. The bolt face now lies against the rear end of the barrel and the head of the cartridge, and the striker post still pressing against the left side of the cam slot in the bolt now cams the bolt to the right, turning the locking lugs fully into the locking recesses of the receiver. As the bolt locking is completed, the striker post enters the longitudinal front part of its cut and carries the striker against the primer of the cartridge in the chamber, firing the cartridge.

The Effect of Firing

Firing develops the power for another cycle of operations. As soon as the bullet has passed the gas port near the muzzle of the barrel, gas under pressure is driven through the gas port into the gas-chamber gland and chamber and through the hole in the gas-regulator cup onto the head of the piston, driving it rearward in the gas cylinder. Driving the rack teeth back over the gear teeth with which they mesh rotates the gear and extends the mainspring during the entire opening movement. During the first 1⅛ in. of rearward travel the striker post moves back with a longitudinal part of its cut in the bolt, withdrawing the point of the striker from the face of the bolt, the bolt remaining locked and stationary. In the next ⅜ in. of travel the striker post, driven still farther rearward in the bolt, strikes with its right side the cam surface in the right side of its slot in the bolt, causing the bolt to rotate from right to left, turning the locking lugs out of their recesses. The striker post now reaches the rear of its cut in the bolt, and its further travel carries the bolt directly back with it; the empty shell is held in the grip of the extractors till the feed-operating stud strikes the rear of the ejector.

The top lug of the feed-operating stud, traveling in the groove in the under side of the feed-operating arm, cams the feed-operating arm so that it swings across the top of the receiver from right to left. The feed pawl, acting against one of the outer projections of

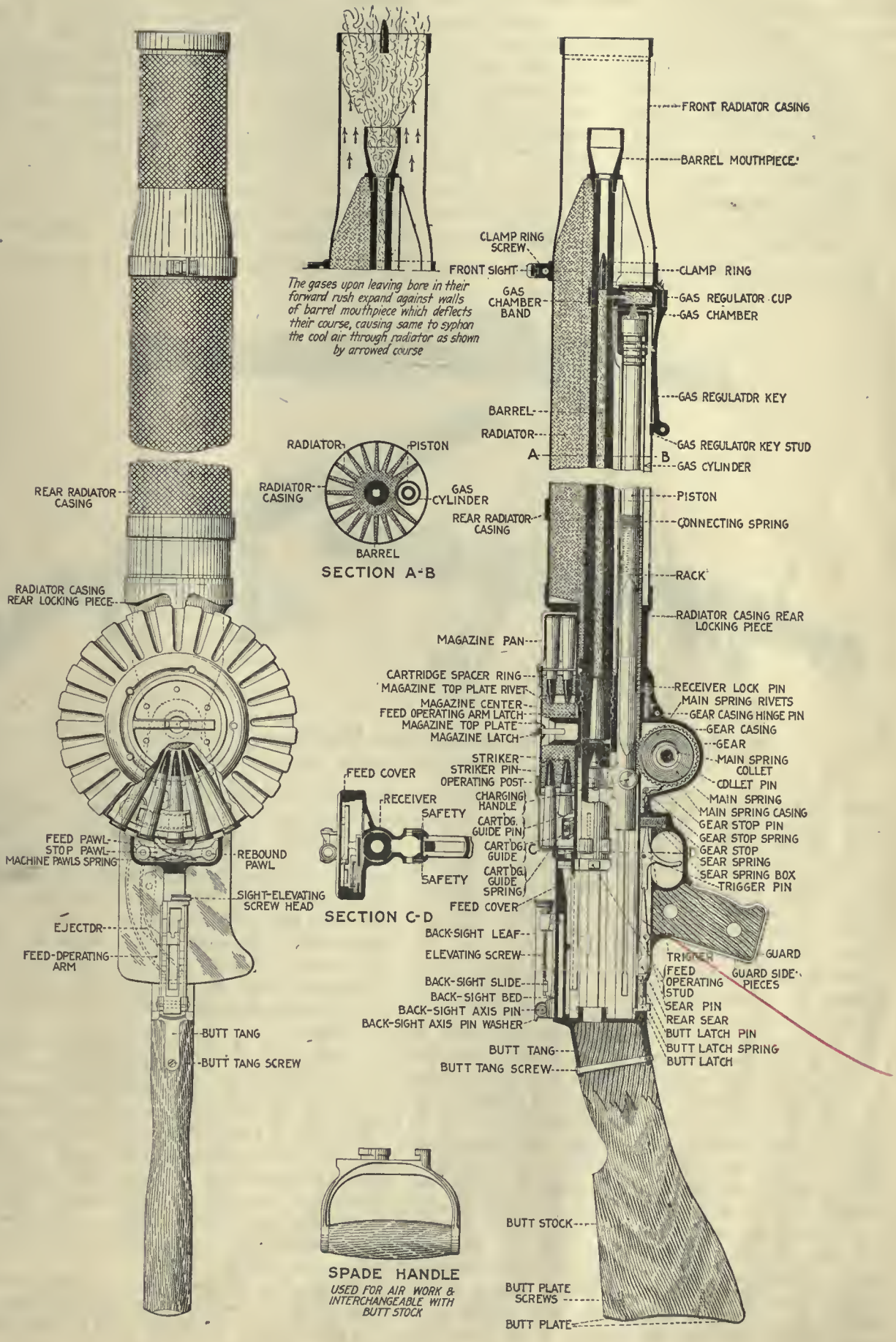
The gases upon leaving bore in their forward rush expand against walls of barrel mouthpiece which deflects their course, causing same to syphon the cool air through radiator as shown by arrowed course
FRONT RADIATOR CASING
BARREL MOUTHPIECE
CLAMP RING SCREW
FRONT SIGHT
CLAMP RING
GAS CHAMBER BAND
GAS REGULATOR CUP
GAS CHAMBER
GAS REGULATDR KEY
BARREL
RADIATOR
GAS REGULATOR KEY STUD
A
B
GAS CYLINDER
RADIATOR
PISTON
RADIATOR CASING
GAS CYLINDER
BARREL
SECTION A-B
REAR RADIATOR CASING
PISTON
REAR RADIATOR CASING
CONNECTING SPRING
RACK
RADIATOR CASING REAR LOCKING PIECE
RADIATOR CASING REAR LOCKING PIECE
MAGAZINE PAN
CARTRIDGE SPACER RING
MAGAZINE TOP PLATE RIVET
MAGAZINE CENTER
FEED OPERATING ARM LATCH
MAGAZINE TOP PLATE
MAGAZINE LATCH
RECEIVER LOCK PIN
MAIN SPRING RIVETS
GEAR CASING HINGE PIN
GEAR CASING
GEAR
MAIN SPRING COLLET
COLLET PIN
MAIN SPRING
MAIN SPRING CASING
GEAR STOP PIN
GEAR STOP SPRING
GEAR STOP
SEAR SPRING
SEAR SPRING BOX
TRIGGER PIN
FEED PAWL
STOP PAWL
MACHINE PAWLS SPRING
REBOUND PAWL
SIGHT-ELEVATING SCREW HEAD
EJECTDR
FEED-OPERATING ARM
FEED COVER
RECEIVER
SAFETY
STRIKER
STRIKER PIN
OPERATING POST
CHARGING HANDLE
CART'DG. GUIDE PIN
CART'DG. GUIDE
CART'DG. GUIDE SPRING
SAFETY
SECTION C-D
FEED COVER
BACK-SIGHT LEAF
ELEVATING SCREW
BACK-SIGHT SLIDE
BACK-SIGHT BED
BACK-SIGHT AXIS PIN
BACK-SIGHT AXIS PIN WASHER
TRIGGER GUARD
FEED OPERATING STUD
GUARD SIDE PIECES
SEAR PIN
REAR SEAR
BUTT LATCH PIN
BUTT LATCH SPRING
BUTT LATCH
BUTT TANG
BUTT TANG SCREW
BUTT TANG
BUTT TANG SCREW
BUTT STOCK
BUTT PLATE SCREWS
BUTT PLATE
SPADE HANDLE
USED FOR AIR WORK & INTERCHANGEABLE WITH BUTT STOCK

the magazine pan, carries the magazine around sufficiently to drive the first cartridge down into the cartridge opening in the feed-operating arm by the rotation of the magazine pan and interior separators around the stationary, spirally grooved magazine center. The cartridge opening of the feed-operating arm, with the cartridge it has just received, now commences to pass under the upward projecting arms of the feed cover, which carry the cartridge guide; and these arms commence to control the cartridge as soon as it leaves the magazine. Further leftward travel of the feed-operating arm brings the cartridge under the cartridge guide and its downward spring tension. At this point, the spring stud on the feed-operating arm clears the feed" position. If pressure has been maintained on the trigger, the closing stroke will instantly be repeated; and automatic operation of the gun will continue until the cartridges in the magazine are exhausted or pressure is removed from the trigger.

Feed is absolutely positive and unaffected by the position of the gun. The cartridge is under complete mechanical control during every stage of feeding. The functioning of the gun is unaffected by pointing it straight up or straight down or turning it on its side or upside down. Ejection is also positive.

The forms of gas port, regulator cup, cylinder and piston permit functioning the gun by a materially smaller volume of gas and at much lower pressure than

THREE VIEWS OF THE LEWIS MACHINE GUN

stop pawl, which is then pressed forward by its spring and prevents further rotation of the magazine.

The lug on the left of the feed-operating stud now strikes the rear end of the ejector, driving it into its slot and pivoting the head of the ejector out so that it strikes the side of the empty shell, which has still been carried by the extractor, and throws it through the ejector port out of the receiver to the right.

Toward the end of the rearward travel of the rack, the bent (downward projection of the lower surface of the rack whose space forms the cocking notch) rides over the nose of the sear, temporarily depressing it against the tension of the sear spring, which immediately rises again. The rear end of the rack then strikes the butt tang, terminating the opening stroke. The feed-operating arm is now at the extreme left, the cartridge has been brought over the cartridge opening in the top of the receiver against which the cartridge guide presses it, the rebound pawl engages an exterior projection of the magazine so as to prevent backward rotation, and the mainspring is in full tension.

If after its first pressure the trigger has been instantly released, the piston and rack will be intercepted by the engagement of the nose of the sear with the cocking notch or bent in the lower edge of the rack, suspending the operation of the gun in the "ready to

in gas-operated mechanisms of previous design. As a result, shock and strain of parts are minimized, and retraction of the breech mechanism by hand is facilitated.

The gun may be entirely dismounted without other tools than a cartridge and a small spanner. Removing the buttstock and withdrawing the rack, piston and bolt leave the barrel and cylinder ready for cleaning. This permits inspection of the barrel or insertion of the cleaning rod into the barrel from either end.

Semi-automatic fire (single shots) or automatic fire may be obtained at will without extra parts or special adjustment.

Vibration of the barrel is so damped and broken up by the radial support afforded the barrel by the mass and structure of the radiator that single shots are fired on the same line of sight as that of full automatic fire.

The muzzle blast, directed by the barrel mouthpiece onto the interior of the radiator casing in front of the muzzle to induce the air current through the radiator, exerts a forward pull on the radiator casing which neutralizes the recoil to such an extent that the gun may be fired from the shoulder with accuracy and without inconvenience.

The absence of recoil and vibration permits satisfactory use with a very light mount or with no mount. The bipod mount furnished with the gun weighs only

1 lb. 14½ oz. and is intended to remain attached to the gun during transportation. It does not interfere with carrying, operation or cleaning and is adapted to satisfactory use under widely varying conditions. Mounts especially designed for naval and aërial use may be supplied, and the gun may be adapted to any existing form of tripod, if desired.

The gun is absolutely mobile. Besides its ability to function normally at any angle or in any position, it may be carried, loaded and locked by one man, who can commence firing as quickly and easily as with the Model 1903 service rifle.

A magazine may be placed on the magazine post and latched, or may be unlatched and removed with one hand. The magazine latch is conveniently operated by the thumb of the hand that puts the magazine on the magazine post or removes it from the post. No delicate adjustment is necessary in putting the magazine on the post and preparing to fire, and it may be done with as much speed in total darkness as in daylight.

The Vickers Machine Gun Model of 1915

By Ethan Viall and E. A. Suverkrop

THE mechanism and appearance of the English and American models of the Vickers machine guns are practically the same, but different types of sights are used. Examples of the English guns are shown in the headpiece, but the illustrations in the body of this article and the text itself apply directly to the American model. The machine gun, model of 1915, opposite views of which are shown in Figs. 1 and 2, belongs to that class of automatic guns in which the force of recoil is utilized for operation. After the first shot the gun is self-operative, until the ammunition in the cartridge belt is exhausted or until the trigger is released. The force of recoil opens the breech, extracts the empty case, and inserts and fires the next cartridge. The gun, without water in the jacket, weighs 32½ lb., with water in the jacket, 42 lb.; weight of tripod, 36 lb. The gun is adjusted to fire 500 shots per minute.

The ammunition used in this gun is the same as that provided for the United States rifle, caliber 0.30, model of 1903. It is fed into the gun by means of cartridge belts, holding 250 cartridges each. The cartridges are loaded in the belts by means of a belt-filling machine.

The belt is formed of two pieces of flax webbing connected by brass strips and eyelets between adjacent cartridges, every third strip projecting 0.95 in. beyond the bullet edge of the belt to guide the latter through the feed box and belt-filling machine and to prevent side motion of the belt in the ammunition box. The webbing is made double thick along the bullet edge by turning ½ in. over a cotton cord, which regulates the distance which the cartridges may be inserted in the belt. A brass handle 4 in. long is attached to each end of the belt.

In firing, the action of the mechanism is as follows: The barrel and lock move to the rear a short distance. At the end of this recoil the lock is drawn back from the chamber, thus opening the breech and at the same time drawing a loaded cartridge from the belt and extracting the empty case from the chamber. During the last part of the motion of the lock the empty case and the loaded cartridge are lowered until the latter is in line with the chamber and the former drops to the ground. Under the influence of a spring, which the movement of recoil has extended, the lock is then pressed forward, the fresh cartridge is pushed into the chamber, the belt is fed forward one round, and the carrier and barrel finally returned to the firing position. During the recoil the firing pin is cocked, and unless the trigger has been released the sear is struck at the conclusion of the movement described above, and the gun is again fired. Continuous fire is obtained, therefore, simply by keeping the trigger pressed down after firing the first round.

Detailed Description of the Gun

The gun consists of the following principal parts: The barrel, trunnion block, water jacket, condensing apparatus, water-jacket cap, steam tube, filling and drain plugs, casing, handle block, recoil mechanism, lock mechanism, firing mechanism, feed box, muzzle attachment and sights. Details of the mechanism are shown in Fig. 3, and of the action in Figs. 4 and 5.

The Barrel

The barrel is chambered and rifled the same as the United States magazine rifle. On its exterior, near the muzzle and breech ends, are turned two cylindrical bearings which rest in corresponding supports in the trunnion block and water-jacket cap, and on these bearings the barrel slides back and forth in action. Both bearings are packed with asbestos to prevent water leaking from the water jacket. On the breech end of the barrel are formed two trunnions, by which the two recoil plates are attached to the barrel. The muzzle end is threaded

for the barrel disk. To prevent rusting from the water in the water jacket, the exterior of the barrel is copper plated.

The trunnion block is a steel casting, carrying at its lower end a lug, through which passes the trunnion pin of the tripod. The trunnion pin secures the gun to its mount and forms the axis about which the gun is moved in elevation. The front end of the casting is cylindrical and is threaded to receive the rear end of the water jacket. Under the circular section a drilled hole furnishes a seat for the rear plug of the inside tube and

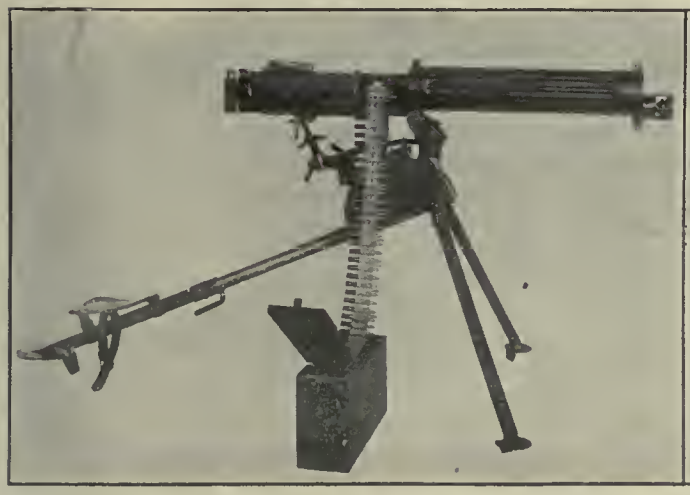

FIGS. 1 AND 2. OPPOSITE VIEWS OF VICKERS MACHINE GUN AND TRIPOD

directly in rear of this circular section the block is rectangular in shape and serves as the front support of the casing inclosing the lock and recoil mechanisms. A horizontal hole is drilled through the rectangular part of the trunnion block and serves as the rear support for the barrel, and back of this in the bottom plate is the opening through which the cartridge cases fall.

The Water Jacket

The water jacket consists of a piece of drawn-steel tubing threaded on the exterior at each end. The rear end screws in the trunnion block and the front end in the water-jacket cap. Near the rear end and on the upper right-hand side is a drilled and tapped hole for the filling plug, and near the front on the bottom a second hole is drilled and tapped for the water plug, through which the water in the jacket may be drawn off.

The adjustment of water jacket and trunnion block brings the barrel, when in position, below the center of the water jacket. By this arrangement a sufficient space above the barrel is obtained for the insertion of a steam exhaust consisting of an inside tube and an outside slide. The inside tube has two holes cut in its upper side, one near each end. A steam vent running down through the water-jacket cap is connected with the inside tube by means of a hole in the front plug. By this arrangement, no matter whether the piece be horizontal or in maximum depression or elevation, steam can always escape, as the outside slide will automatically cover the lower opening in the tube, preventing water from entering it and will leave the other hole open for the passage of steam from the jacket through the tube and water-jacket cap hole to the condensing apparatus. From the arrangement of this tube and slide, if the piece be left horizontal in filling and the stopper closing the steam-escape hole in the water-jacket cap be removed, water will issue from the water-jacket cap hole as soon as the water jacket has been filled above the level of the tube. This is an indication that the jacket is sufficiently full of water. Should the stopper not be removed, the jacket may of course be filled up to the level of the filling hole. This will do no harm, but will result, after firing a number of rounds sufficiently to develop steam pressure, in the blowing off of hot water through the water-jacket cap hole which will continue until the level of the water in the jacket has been reduced sufficiently to allow the free escape of steam to the condensing apparatus or to the open air, depending on the conditions under which it is operating.

The Condensing Apparatus

The condensing apparatus consists of a hose and a water box nearly full of water. In place of a water box, a pail, can, or a hole in the ground that will hold water, may be used. The hose leads from the steam outlet of the water jacket into the water, thereby condensing the steam as it comes in contact with the water.

When a container is used, the condensed steam and water may be returned to the water jacket of the gun and used over again.

The Water-Jacket Cap

The water-jacket cap is a steel casting which screws on the front end of the water jacket. It contains a threaded seat for the stuffing-box follower, which forms the front support for the barrel and also a threaded seat for the front plug on the inside tube. On the front of the cap is screwed the follower and on top is screwed the front sight. The water-jacket cap tube for the escape of steam, mentioned above, is screwed into the cap and runs from the front plug hole of the inside tube diagonally down to its opening at the underside of the cap. On the top of the cap are stamped the name, model and serial number of the gun for identification purposes.

The Filling Plug

The filling plug consists of a tapped hole in the trunnion block, a water plug, and a chain, hook and eyebolt for securing the plug to the trunnion block. The con-

struction is such as to allow the easy unscrewing of the plug for insertion of the nozzle of the filling cup. When the nozzle is withdrawn the plug is screwed again into place.

The Casing

The casing consists of the right and left outside plates, the bottom plate, slide and two covers, which are all made of steel. The outside plates are slotted to permit the free movement of the projecting parts of the recoil mechanism and to guide them in recoil. They are drilled for the pins and rivets by which they are attached to the handle block, trunnion block, covers and bottom plate. The bottom plate is of channel cross-section, the side flanges providing a support for the outside plates. The space beneath the flanges serves as a sliding seat for the slide. On the underside are the lugs to which the head of the elevating screw is pinned. The covers are hinged to each other and to the side plates, and are held closed by a spring catch at the rear end and a rotating bolt at the front end. On the underside of the rear cover the cover guides are riveted for guiding the carrier in recoil. On top of the front cover is riveted the rear sight. On the underside of the rear cover the trigger bar is guided in a groove.

The Handle Block

The handle block is a steel casting which closes the rear end of the casing and carries the handles by which the gun is held during firing. Between these handles is pivoted the trigger, which consists of a straight lever, on the upper end of which a thumbpiece is riveted. The trigger is pointed to engage the safety catch. The upper end of the trigger engages a projection on a catch which is pivoted between the handles and prevents accidental movement of the trigger. The handle block is pivoted about a bolt passing through its lower end and the two side plates. The upper end is held in place by a T-headed pin passing through it from the left side plate and screwing into the right side plate.

On the inside of the handle block the trigger lever is pivoted, the lower end of which engages a pawl which in turn is pivoted to the trigger. Between the upper end of the trigger lever and the safety catch is a compression spring which keeps these parts in constant contact. The upper end of the trigger lever engages the rear end of the trigger bar between two projections on its lower side.

The Recoil Mechanism

The recoil mechanism consists of the recoil plates, crank, roller handle, fusee, crosshead, dead stop, crank-slot filler pieces, recoil spring, recoil-spring tension screw and spring box.

The recoil plates are two parallel steel plates which embrace the trunnions of the barrel at their front ends, and at their rear ends include and furnish bearings for the crank. On their inner surfaces are formed guides in which the lock frame slides back and forth in action.

The crank consists of a shaft which extends through the side plates on both sides and carries at its center, between the recoil plates, a slotted arm to which the crosshead is pinned and about which pin the crosshead rotates. Its right end is hexagonal in shape and carries the roller handle secured to it by a pin. On the left end is a short arm called the fusee, to which is pinned the link chain for connecting the recoil spring with the fusee. The crosshead is a short piece pivoted at the rear end to the arm on the crank and secured at its front end to the side levers of the locking mechanism by a bayonet joint. It serves simply as a link to connect the crank arm with the side levers. On its shank near the center is screwed the crank-adjusting nut. By inserting thin washers between the shoulder on the shank and the nut the position of the side levers with reference to the crosshead can be varied. This causes a change in the location of the lock frame, and by this means an accurate adjustment of the head space required by the cartridges can be obtained. The dead stop is a steel cam pivoted on the right side plate and serves to limit the movement of the roller handle in counter recoil. The recoil-spring is a helical tension spring inclosed in the spring box attached to the left side plate by means of two small studs in front and one in the rear. The rear end of the spring is held by two short links to the fusee and the front end is secured to the box by means of the tension screw threaded to the recoil-spring nut and passing through a hole in the spring box. The tension of the recoil spring is regulated with the tension screw which is turned by a sliding pin handle.

The Lock Mechanism

The lock mechanism is contained between the recoil plates and consists of the lock frame, filler piece, carrier, gib, gib spring, gib-spring plate, side levers and pins, lifting levers, firing pin and striker point, mainspring, tumbler and pin, safety sear and pin, and hand sear and pin. All these parts are contained in or assembled to the lock frame. The latter is a steel forging having at its front a narrow vertical face about 3.25 in. long in which are cut the guide ribs which mount the carrier. The filler piece is located in the center of the narrow vertical face. On the bottom part of the lock frame are formed two horizontal ribs on each side that support the lock in the recoil plates and are the bearings on which it moves during recoil. Above these ribs the frame is slotted out horizontally to form a seat for the firing pin. The top of these ribs forms a seat for the lifting levers.

The carrier has a vertical sliding motion on the front face of the lock frame. Its face is provided with flanges which, with the gib projecting through from the rear, embrace the base of the cartridge case in the operations of withdrawing it from the belt, inserting it in the chamber and extracting it after firing. Near the bottom a conical hole is drilled to permit the passage of the point of the firing pin.

The side levers consist of a fork-shaped shank, the solid end of which is bored out to fit the crosshead, while each arm of the forked end terminates in a lever extending upward and to the rear. The fork embraces the lock frame, and the piece is pinned to the latter at the front end of the fork.

The lifting levers consist of two plates pivoted near one end on a pin. This pin passes through the rear part of the lock frame, the levers lying outside the frame.

The firing pin is a rectangular-shaped forging, whose front end has the case-hardened striker point secured to it by a screw. On the sides are formed parallel shoulders, by which the pin is supported in the lock

frame. The top edge is cut away irregularly, forming a shoulder, against which the mainspring abuts, and also a bearing for the tumbler. The latter, an L-shaped piece, is pivoted to the lock frame at the angle. The shorter arm fits the notch in the upper edge of the firing pin and serves to retract and hold the firing pin in the cocked position. The longer arm is pushed up by the side lever shank as the latter is raised in recoiling, thus forcing the shorter arm to retract and cock the firing pin.

The mainspring is a leaf spring placed vertically in the upper part of the lock frame, the longer end engaging a boss on the firing pin and the shorter abutting against the hand sear. The latter is a straight lever secured near the lower end by a pin passing through the sides of the lock frame, and about which it rotates. The lower end engages a notch on the tumbler, and the upper end fits into the long slot of the trigger bar and is engaged by the front end or shoulder of the slot. In the firing position the side-lever shank is horizontal in prolongation of the crosshead. The carrier is therefore dropped to its lowest position by the lifting levers, so that the firing-pin hole is opposite the corresponding hole in the lock frame. Upon firing, the carrier first receives the shock of recoil, distributes it along its bearing surfaces to the lock frame, which in turn transmits it to the side levers, side-lever shank, crosshead, crank, recoil plates, fusee, and finally through the recoil spring to the casing and mount.

The Firing Mechanism

The firing mechanism consists of the trigger, trigger spring, trigger-lever safety catch and trigger bar. As described above, the trigger is a straight lever secured near its lower end to the handle block by a pin, about which it rotates. The upper end engages the safety catch, which holds it to the rear until it is released by lifting the catch and is pressed in. The trigger bar is a long, narrow plate lying in the channel of the rear cover plate. It contains one long slot. The trigger spring is a small helical spring mounted on a stud in the front face of the safety catch and tends to separate the trigger and trigger lever. It presses the upper part of the trigger to the rear, so that the trigger bar can move forward under the action of the mainspring transmitted through the hand sear and permit the latter to engage the shoulder on the tumbler when the piece is cocked. In continuous firing, as the trigger bar is held back by the trigger, the hand sear will never be able to engage the shoulder on the tumbler, but, being kept out of engagement, will allow the firing pin to move forward again as soon as the cycle of movement which ends with its cocking or retraction is completed.

The Feed Box

The feed box is a hollow steel casting extending transversely through the casing near its forward end. On the right side it projects beyond the casing, and its lower edge is curved to facilitate the feeding of the cartridge belt. On the front edge of the feed box a vertical bearing is provided in which is seated the arbor of the feed-box lever. This lever is held in place by the feed-box bearing cap, which slides into place after inserting the lever. At the end of the lower arm of the lever is a stud which engages in a slot near the front end of the left recoil plate. In the end of the upper arm of the lever is a stud which takes a slot on the top of the feed-box slide. The feed-box slide is a flat steel

SERIAL LIST OF COMPONENT PARTS

(Numbers before components refer to numbers shown in Figs. 3 and 4.)

4A Trunnion block
5A Outside plate, rigbt
5B Outside plate, left
6A Bottom plate
6B Bottom plate slide
6C Bottom plate slide stop
6D Slide catch head
6E Bottom plate slide catcb
6F Roller bracket
6G Outside plate filling piece
6H Front cover stop
7A Water-jacket cap
7B Steam outlet tube
7C Trunnion block distance piece
7D Stuffing box
8A Water jacket
8B Outer steam tube
8C Steam tube plug
8D Inner steam tube
8E Steam tube socket
8F Water-jacket trougb
9A Barrel
10A Recoil plate, left band
10B Recoil plate, right band
11A Crank
11B Crossbead
11C Fusee link (rear)
11D Fusee link (front)
12A Roller handle
12B Dead stop plunger
12C Roller handle knob
12D Dead stop
12E Dead-stop bracket
12F Roller
13A Lock frame
13B Filling piece
13C Hand sear
13D Tumbler
13E Firing pin
13F Safety sear
13G Distance piece for lock frame
13H Striker point
14A Side lever
14B Lifting lever, right hand
14C Lifting lever, left hand
14D Carrier
14E Gib
14F Gib spring plate
15A Handle block
15B Handle grip
15C Oil reservoir cap
15D Reservoir cap washer
15E Handle block oil reservoir
15F Brusb bolder
15G Brush
16A Trigger lever
16B Trigger pawl
16C Safety catcb
16D Thumb piece
16E Handle block pin
16F Trigger
17A Rear cover
17B Trigger bar
17C Rear cover catch
17D Rear guide stud
18A Front cover
18B Front cover catch cap
18C Front cover catch snib
18D Cover guide, right hand
18E Cover guide, left hand
18F Front cover catcb bracket
18G Front cover catcb
19A Feed box
20A Bottom pawl, left band
20B Bottom pawl, right band
20C Bottom pawl connecting plate
20D Feed-box lever
20E Feed-box slide
20F Cartridge guide and stop
20G Feed-box bearing cap
20H Upper pawl, left hand
20J Upper pawl, right band
21A Front sight
21C Deflection leaf
21E Front-sight carrier
22A Sight cam
22B Rear sight bracket
22C Rear sight stem
22D Catch button
22E Slide
23A Watcr plug
23B Water-plug top piece
23C Stem covcring
23D Water-plug fastening link
23E Water-plug fastening ring
23F Water-jacket cap bose connection
23G Stcm
23H Eyebolt
23J Securing S hook
23K Securing chain (6 links)
23L Securing cbain (12 links)
24A Spring box
24B Spring-box fixing (front)
24C Spring-box fixing (rear)
24D Fusee
24E Recoil-spring hook
24F Recoil-spring nut
25A Sleeve
25B Front disk
25C Muzzle attachment securing chain
25D Securing chain ring
25E Muzzle gland
25F Front disk cap
25G Barrel disk
25H Barrel-disk clamping screw
25K Follower
26B Locking pin
26C Side-lever pin
26D Trigger pin
26E Bottom pawl rivet
26F Rivet
26G Rivet
26H Bottom and outside plate rivet
26J Bottom and outside plate rivet
26K Dead-stop bracket and outside plate rivet
26L Carrier supporting spring rivet
26M Fusee rivet
26N Chain-link rivet
26P Lock-frame rivet
26Q Adjusting washer (thick)
26R Adjusting washer (tbin)
26S Stem washer
26T Tension screw bandle wasber
26U Water plug washer
26V Belleville washer
26W Deflection-screw washer
26X Roller washer
26Y Side lever-pin bushing
27A Deflection-screw wasbcr pin
27B Rear-sight stem pin
27C Dead-stop pin
27D Slide-catch pin
27E Trigger-pawl pin
27F End-link pin
27G Crank pin
27H Crank-pin fastening link
27J Upper-pawl pin
27K Filling-piece pin
27L Safety-sear pin
27M Trunnion block and outside plate pin
27N Rear rivet for rear sight
27P Front rivet for rear sight
27Q Cartridge guide and stop rivet
27R Cartridge guide rivet
27S Spring box rear stud
27T Spring box front stud
27U Tumbler pin
27V Hand-sear pin
27W Muzzle attacbment stop pin
27X Bottom pawl pin
27Y Trunnion block and outside plate rivet
27Z Tension-screw handle
28A Handle block hinge pin
28B Cover-hinge pin
28C Rear-cover catch hinge pin
28D Front-plug screw
28E Steam tube front plug
28F Front-sight carrier screw
28G Hose-connection screw
28H Safety-catch pin
28J Recoil spring tension screw
28K Screw-securing crank bandle
28L Deflection screw
28M Trunnion block and outside plate screw
28N Cover-hinge pin nut
28P Sight-cam securing screw
28Q Dead-stop plunger stop
28R Adjusting nut
28S Trigger-bar spring plunger
29A Carrier supporting spring, left hand
29B Carrier supporting spring, right hand
29C Gib spring
29E Rear cover catch spring
29F Bottom-pawl spring
29G Bullet-guide spring
29H Upper-pawl spring
29J Mainspring
29K Safety-sear spring
29L Recoil spring
29M Dead-stop plunger spring
29N Trigger-lever spring
29P Trigger-bar spring
29Q Front-cover catch snib spring
29R Catch-button spring
29S Slide-catch spring
B1A Trunnion pin
B1B Trunnion pin collar
B1C Trunnion pin adjusting nut

plate seated in grooves in the feed-box casting, which permit it to have a transverse movement. At its right-hand end, on the underside, are formed two lugs. These

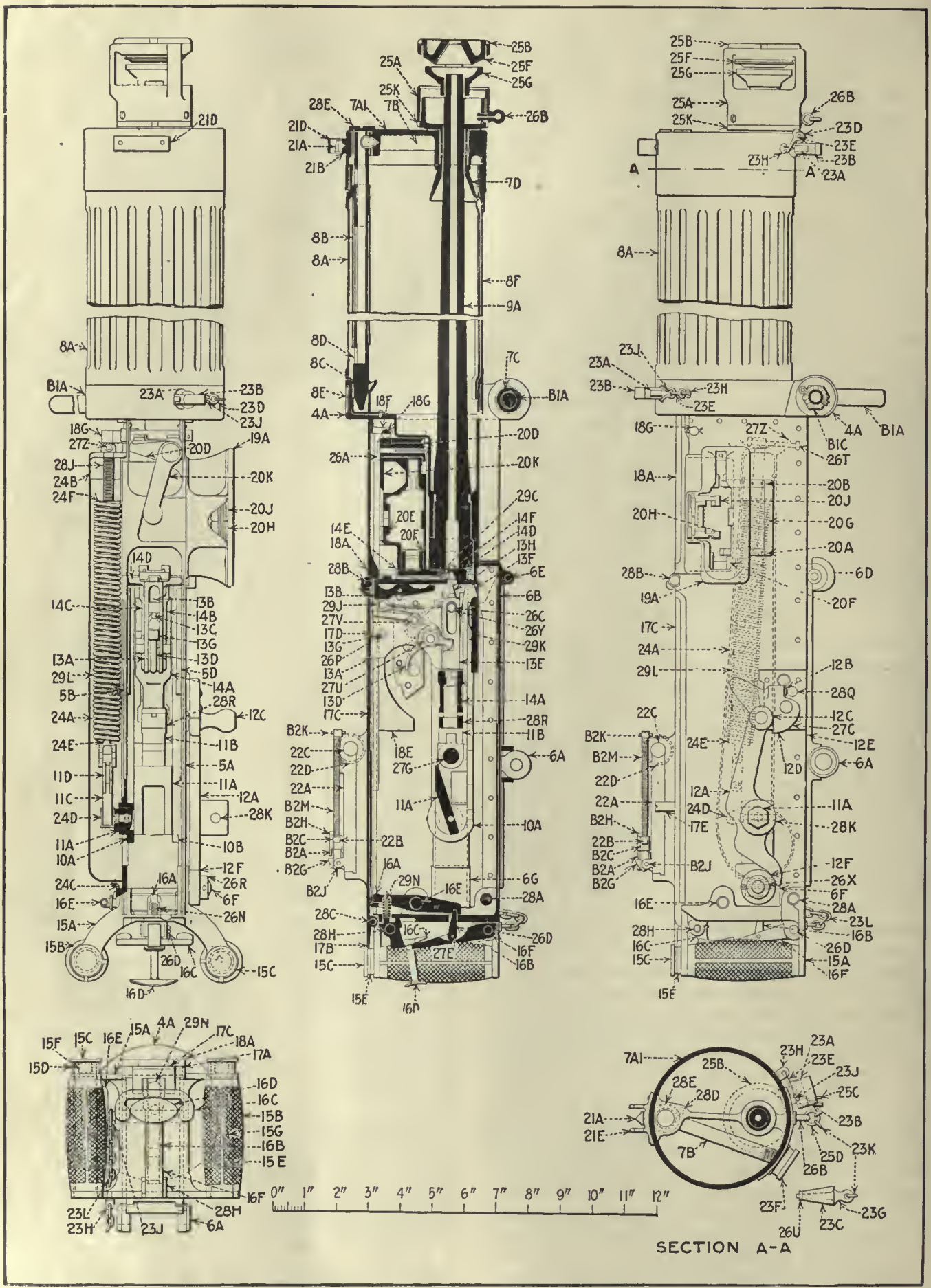

FIG. 3. GENERAL ARRANGEMENTS AND SECTIONAL VIEW OF GUN

lugs are drilled for the upper pawl pin, which serves as an arbor for the upper pawls. The long arms of the pawls are pressed downward by a double leaf spring consisting of two parallel leaves joined at the base and secured to the underside of the slide by an undercut lip.

Beneath the curved lower edge of the right-hand end of the feed box are formed two lugs drilled to take the bottom pawl pin. The bottom pawls are mounted on this pin as an arbor, their long arms projecting through slots in the bottom of the feed box. The shorter arms are slotted at the end in which a finger plate connecting the two arms is riveted for easy manipulation by the fingers. The pawls are kept in position by a peculiar shaped double leaf spring mounted at the center of the pawl pin.

The action of the feed box is as follows: During the recoil of the parts the slot near the front end of the left recoil plate pulls the stud on the end of the lower arm of the lever to the rear. This causes a counterclockwise revolution of the vertical arbor of the lever, resulting in throwing of the feed-box slide plate from left to right by the upper arm, so that the pawls on the underside of the slide plate are pushed back and engage in rear of the next cartridge in the belt. During the counter recoil the movement is reversed, resulting in the feeding of the next round in the belt to the position for engagement with the carrier grooves. The under pawls prevent the movement of the belt from left to right unless depressed from beneath by hand.

The muzzle attachment consists of the follower, barrel disk, front disk, disk cap and sleeve, which are steel forgings whose functions are to regulate the effect of recoil on the system. The barrel disk consists of a hub which screws on the muzzle of the barrel and carries a disk concaved to the front. The follower is secured to the water-jacket cap by a screw thread. Through the front disk a hole is drilled just large enough to permit passage of the bullet, while the sides of the sleeve are cut away as much as possible to allow free escape of the powder gas. The front disk cap can easily be removed when heavily coated with the products of combustion by unscrewing the front disk and prying it out, after which a new cap may be inserted.

Sights

The front sight, complete, is composed of the front sight, front-sight carrier and front-sight carrier screw.

The front sight is a forged-steel piece dovetailed into the front-sight carrier, thus allowing lateral adjustment of the sight. It is shaded by the front-sight cover.

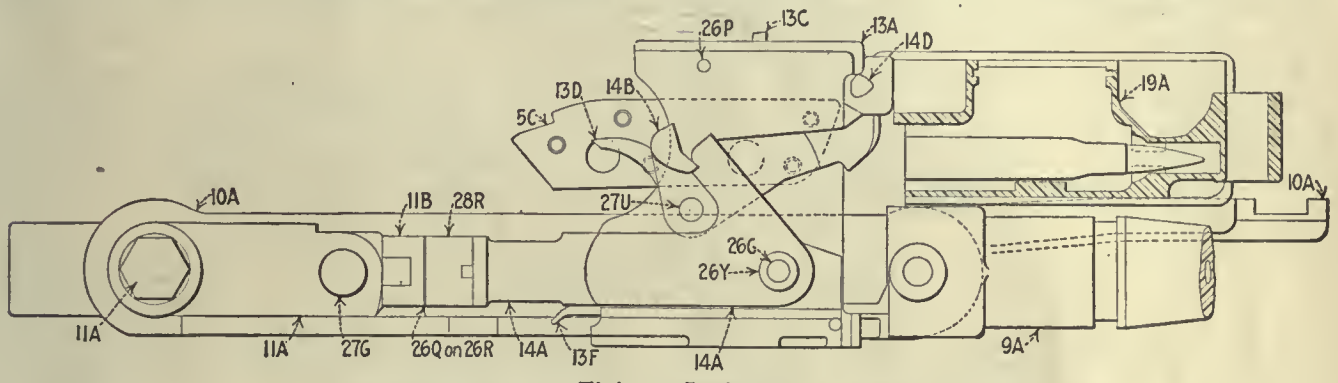

Firing Position

Lock, barrel and recoil plates fully home. Firing pin cocked on to handsear and carrier engaging with two live cartridges, one in barrel, one in feed box.

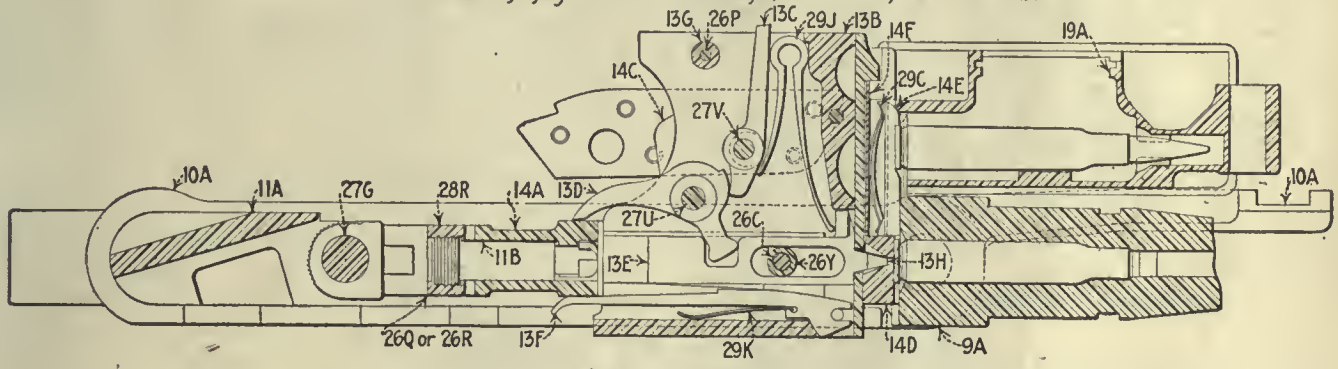

Fired Position

Lock, barrel and recoil plates fully home. Firing pin released and the carrier engaging with a live cartridge in the feed box, and with the empty case in the barrel

FIG. 4. THE ACTION IN FIRING AND FIRED POSITIONS

The rear-sight group is made up of the following principal parts: The movable base, the base spring, the leaf, the elevating screw, the slide, the half nut, the slide cap, the drift slide, the aperture disk and the windage screw.

The movable base has on its upper surface two ears, in which are the holes for the joint pin which serves as a hinge for the leaf. On the rear end of the movable base are the wind-gage graduations, each point of which corresponds to a lateral deviation of 4 in. for each 100 yd. Both ends have lips which fit the undercuts of the fixed base, the front lip having also a worm gear for engaging the thread of the windage screw. The base spring fits in the spring seat of the movable base.

The rear face of the leaf is graduated from 0 to 2600 yd. and its right edge is graduated in mils. On the right side of the sighting opening in the leaf is the groove and seat for the elevating screw, which is a long, thin screw, extending from the bottom of the sighting opening to the top of the leaf, where it is secured in the elevating screw head by the elevating screw pin. This elevating screw allows minute corrections for elevation and also holds the slide in position on the leaf by means of a half nut which is seated in the slide and the half-nut spring, the latter forcing the half nut against the thread on the elevating screw. The pitch of the screw is such that one complete turn corresponds to a change of one mil. The outer end of this half nut is knurled, and by pressing in on the knurled head the half nut can be released from the elevating screw and the slide quickly raised or lowered.

The rear face of the slide is cut out for the leaf, and the drift slide and the right half are made with a seat for the half-nut spring and the half nut. The right and left ends are drilled and tapped for the small slide-cap screw and the large slide-cap screw, which secure the slide cap to the slide. The front face of the slide is slotted and recessed for the pivot.

The slide cap has a circular cut in its upper surface which forms a recess for rotating the aperture disk, and also apertures for sighting and for reading the graduation on the leaf. The center is slotted for the pivot. On the right and left sides are drilled the holes for the small and large slide-cap screws. On the rear face at the bottom of the slide cap is the open or battle sight.

The drift slide moves in the drift slots in the leaf. At the top is a small open sight, while just below are two openings, the upper for the pivot and circular lug on the aperture disk and the lower for a sighting aperture. The drift slide is held in place by a lug on its front face, which bears against the slide and by the lug which contains the open sight. This latter lug extends to the rear and bears against the top of the slide cap. On the lower edge of the open sight lug is another small lug, which engages in the notches on the perimeter of the aperture disk, locking the latter in the desired position.

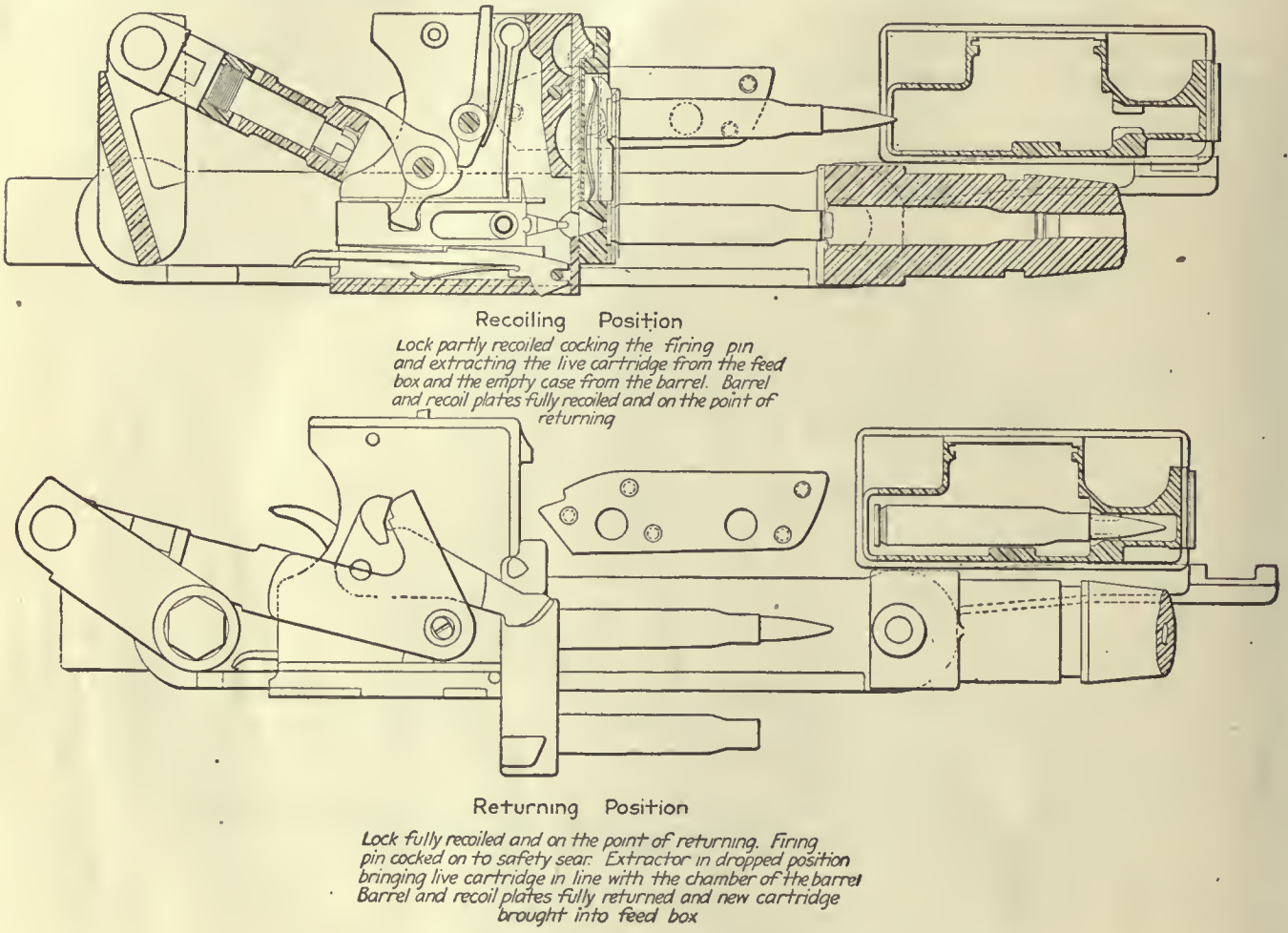

FIG. 5. THE ACTION IN RECOILING AND RETURNING POSITIONS

The aperture disk is a circular piece containing five sight openings, namely: Four peepholes, 0.04, 0.06, 0.08, and 0.10 in. in diameter, and one large aperture which contains an open sight. A circular lug on the front face engages in the central opening of the drift slide, thus causing the aperture disk to conform to the movement of the former. This lug is drilled and tapped for the pivot spring and the pivot. The purpose of the pivot spring is to force the aperture disk to the rear, so that one of the notches, which are cut on its perimeter, will engage in the small lug on the drift slide and prevent rotation. By pressing inward, the aperture disk can be released and rotated until the desired aperture is opposite the sighting openings, located in the drift slide.

The windage screw consists of the windage screw, the windage screw knob, the windage screw collar, the windage screw spring and the windage screw pin. It is seated in the front part of the fixed base.

Description of the Tripod

The tripod consists of the following principal parts: Front legs, trail, seat and seat bracket, pintle and pivot, top carriage, body, traversing mechanism and elevating mechanism.

The Front Legs

The front legs consist each of a short length of drawn steel tubing carrying at the upper end the link by which it is attached to the adjusting arc and at the lower end a flattened shoe. One end of the link is turned to fit snugly in the bore of the tubing and riveted thereto in two places. The upper end of the link terminates in three teeth which fit into a circular rack when adjusted for firing. When it is desired to fold the tripod for transportation or to extend the front legs forward in carrying by hand, the slot in the link permits the clamp to be loosened from its seat on the drum and the teeth to be disengaged from the adjusting arc, swung around, reëngaged, and clamped.

The Trail

The trail consists of two lengths of steel tubing, called the outer and inner trail tubes. The inner tube fits into and is riveted to a socket, which is also riveted between two semicircular side plates, and at its front end carries two adjusting arcs for the front legs. The outer trail tube forms the trail clamp and holds the attachment for the seat.

The inner tube is turned to fit closely the bore of the outer tube, in which it has a sliding motion. This motion may be stopped and the inner tube clamped in any position by means of the trail sleeve clamp which is riveted to the top end of the outer tube. The sleeve is split for a short distance back from the end, so that by tightening the clamp the lugs are brought nearer together and the inner tube firmly gripped.

The key inserted in the trail sleeve works in a longitudinal slot cut in the surface of the inner tube on the underside and prevents the tube from turning. To the rear end of the outer tube is attached a shoe similar to those on the front legs. This construction of the trail permits adjustment of its length to uneven surfaces and shortening to a minimum length for transportation. A pair of leg clips fastened to the outer tube serves to bind securely to the trail the front legs when the tripod is folded.

The Seat

The seat is of sheet steel pressed to shape. Its front end is pivoted to fit the seat sliding collar which slides on the trail tube. The rear end is pivoted to the seat link, which in turn is pivoted to the seat link collar attached to the outer trail tube.

The seat link collar is of steel and riveted near the end of the outer tube. On the underside of the seat are two lugs of the hinge drilled and riveted to it, the action of which is described below. For transportation the seat slides forward by means of the seat sliding collar to which it is pivoted. The rear of the seat folds down close to the trail and the top of the seat link rests on the trail. In action the seat is slid backward and automatically stops by the contact of the seat link with the seat link collar.

The Pintle

The pintle is a hollow steel forging which furnishes the points of attachment for the legs and trail, the pivot for transverse movement of the gun and top carriage, and the seat for the traversing arc.

In the rear of this casting are machined two surfaces inclining outward to which the traversing arm is riveted. The upper end is turned to form a bearing for the top carriage, traversing pivot and yoke. The rear end of the traversing arm furnishes pivot bearings for the elevating nut, while on the underside is the clamp for the traversing arc, the rear edge of which is turned to an arc struck from the center of the pintle axis and fits into a corresponding groove in the rear of the traversing arm, thus preventing the latter from jumping. The top surface of this seat is machined to form a flat bearing surface for the rear ends of both the top carriage and the traversing arm.

The top and front of the pintle is turned to form a vertical bearing for the top carriage and traversing arm. In the upper part of this bearing is pivoted the yoke.

The Top Carriage

The top carriage is a steel forging consisting of a hub bored out to fit over the pintle and an arm projecting downward and to the rear, to which the traversing arc is riveted. This arm is also gibbed to the top carriage guide by means of the groove engaging the circular lip on the latter. On top of the hub is the pivot yoke drilled and slotted transversely for the trunnion pin. The gun rests between the cheeks of this yoke supported by and rotating on the trunnion pin. One end of this pin is bent to a sharp angle to form a handle, while the other is threaded to receive the adjusting nut. The cheeks of the pivot yoke are reamed out and slotted to the size of the ends of the pin. On mounting the gun the pin is dropped through the slots of the pivot yoke and secured by rotating the handle, thereby tightening the cam.

The web at the rear of the top carriage is cut away just in rear of the hub for the top carriage clamp link, and a hole is drilled through the horizontal web for the top carriage clamp bolt, the head of which is fitted with a lever handle. The eccentric portion of the clamp bolt is fitted with a bushing into a link connecting to a hinged plate. By rotating the clamp bolt this plate is raised to engage the notches under the top carriage guide, thereby locking the top carriage to the body.

The Body

The body consists of the side plates, top carriage guides, trail socket, distance pieces and adjusting arcs of the front legs.

The Traversing Mechanism

The traversing pivot is drilled for the passage of the pivot stud and counterbored slightly as a seat for the shoulder on it.

The traversing arm is a steel casting to one end of which is riveted the pintle and rests upon the shoulder formed at the base of the latter. Slightly in rear of this bearing a curved slot is cut, through which the traversing arc passes, and in rear of this slot the arm is bent downward. At the rear end is formed a yoke in which is pivoted the elevating nut.

In front of the elevating nut is fitted the traversing clamp, which consists of a claw, a bushing and clamp handle. By swinging the handle one way or the other the claw engages the under surface of the traversing arc thereby clamping the arm stationary with the traversing arc.

On each side of the traversing arm a traversing stop is fitted to the traversing arc. This stop is fitted with a plunger, a spring and a screw and hooks over the rear of the traversing arc. On the plunger are found teeth to engage the teeth formed under the edge of the traversing arc. By pinching this stop between the thumb and forefinger of either hand it may be disengaged and set at any desired position on the traversing arc. When these stops are placed on the extreme ends of the traversing arc, the traversing arm may be swung 22½ deg. either side of center. By releasing the elevating gear an all round training may be obtained but without any clamp.

The Elevating Mechanism

The elevating mechanism consists principally of the outer elevating screw, the inner elevating screw, the elevating nut, hand wheel, the elevating clamp, the elevating nut pin and the elevating pin.

The outer elevating screw is a steel cylinder, on which is screwed at the upper end the handwheel, with six knobs, with which the screw can be turned by hand. A right-hand screw thread is cut on the exterior of the body and a left-hand thread is cut for a short distance on the interior of the body. The remainder of the bore is reamed out to a diameter large enough to clear the inner screw when in place.

The inner elevating screw is a steel forging, at the upper end of which a T-shaped head is formed, which is drilled transversely. This head fits between lugs on the bottom plate of the gun and is secured to them by the elevating pin. The pin has a spring at one end which is held in place by riveting.

On the body of the screw is cut a left-hand thread corresponding to that on the interior of the outer screw. The lower end is drilled and tapped axially for a stop screw, which, by closing the end of the thread, limits the upward movement of the inner screw when it comes in contact with the bottom of the interior thread in the outer. The elevating nut is a long nut, carrying at its lower end a lug drilled to take the elevating-nut pin by which it is hinged to the top carriage and at its upper end a second lug for the elevating clamp. The bore of the nut is threaded for the outer elevating screw for its whole length. The threaded part is slotted longitudinally through the center of the clamp lug. One side of the latter is reamed to take the body of the clamp and the other is threaded. The clamp itself consists of a bent handle and a body partly smooth and partly threaded. It is inserted through the reamed portion of the lug on the nut and screws through the threaded portion, being kept in place by a collar and pin on the projecting end. By screwing in the clamp still farther the two portions of the lug are brought closer together, thus causing the nut to grip the outer elevating screw tightly and prevent any movement of the latter.

As the inner elevating screw is prevented from turning by its attachment to the gun and the elevating nut likewise by its attachment to the carriage, it follows that rotation of the outer screw will cause it to move either up or down in the nut and at the same time force the inner screw in the same direction. The elevating mechanism gives a range in elevation of 16 degrees.

By disengaging the T-head of the elevating screw from the bottom cover plate the gun may be swung around a complete circle. By swinging it around 180 deg. the gun may be elevated to 75 deg., but without any elevating clamp.

INDEX

(*Indicates Illustrations.)

Action, Lewis machine gun, 316
Enfield, description of, 304
of rifle, 10
U. S. machine gun, 305
Actuator, the, U. S. machine gun, 308
Allen alteration, 8
Alteration, Allen, 8
Annealing, 10
American musket, origin, 5
Armories, first, U. S., 7
private, U. S., 7
Arquebus, 1
Artillery, early use of, 1

Ballistics, U. S. machine gun, 305
Bands, turning for, *261
Barrel cleaning rods, 235
handles, 236
cooling, U. S. machine gun, 314
Enfield, length, 303
groove, U. S. machine gun, 306
operations, 14–24, 40
rolling, 11–25
cams for, 25
steel in Enfield, 303
straightening, 18
Vickers machine gun, 320
Base, fixed, 31, 40
spring, details, 197
operations, 196
Bayonet, catch, 292
Enfield, 303
grip, 292, 294
guard, 292, 296
nut, 301
operations on, *283
rod, *3, 8
scabbard catch, 292, 298
screw, 302
spring, 302
washer, 302
Bayonets, milling on, *285
types of, U. S., *7
U. S. Army, 283
Bedding and drilling, machine, *246
for receiver, *255
machine, farrel, 245
details, *252
receiver, *256
stock, * 250
Body, tripod, Vickers machine gun, 327
Bolt action, Remington, 6
Chaffee-Reece, *6
details of, 81
forging, 82
lever, Enfield, 303
mechanism Enfield, 304
operations on, 81–105
Bore of a gun, 1
Breech closure, Lewis machine gun, 315
loader, Abraham Hall, *5
Chaffee-Reece, *3
Cookson magazine, 5
Hall, *2
John H. Hall, 5
Remington, 1870, *3
Breech loader, Springfield, 1865, *2
Ward-Burton, *3
loading cannon, 1
Broaching trigger hole, 164
Browning barrels, 33–35
solution, 33–34
Brush for cleaning rifle, 240
Bullet, Greener, *5
Burnside carbine, *6
Butt, boring out, *268
plate cap, details, 217
operations, 217
details, 212
operations, 212
fitting, * 260
U. S. machine gun, 312
swivel plate, details, 228
operations, 227

Caliber, *5
U. S. automatic, 305
Cannon, breech loading, invention of, 1
hand, 1
primitive Chinese, *1
vent, placing of, 1
Carbine, Burnside, *6
Colt repeater, *6
Gallagher, *6
Joslyn, *6
Kittridge, *6
Maynard, *6
Remington, *6
Sharp's, *6
Smith, *6
Spencer, *3
Starr, *6
U. S., magazine, *3
Carriage, top, Vickers machine gun, 327
Cartridge, center-fire, *5
chamber, 12–22
Enfield, 303
needle gun, 5
pin-fire, *5
rim-fire, *5
stop, U. S. machine gun, 309
Cartridges, first metal, *5
paper, 5
Casehardening, 80
Casing, Vickers machine gun, 322
Center-fire, cartridge, 5
Chaffee-Reece rifle, *3
Chamber for cartridge, 12–22
gages, 22
Charleville muskets, 5
Cleaning rods for barrel, 235
handles, 236
Cocking, handle, U. S. machine gun, 310
piece, details, 123
operations, 124
Colt carbine, *6
Component parts of rifle, 10
Condensing apparatus, Vickers machine gun, 321
Container for spare parts, 240
Cookson, John, breech loader, *5
Cooling barrel, U. S. machine gun, 314
Lewis machine gun, 315

Cover plates, U. S. machine gun, 307
Cut-off, details, 181
operations, 181
Cutting grasping grooves, *246

Derringer, Henry, 7
Details, Lewis machine gun, *31.
U. S. machine gun, *308
Vickers machine gun, *324
Deyse needle cartridge, 5
Drift slides, details, 209
operations, 209

Ejection of shell, Enfield, 304
Ejector details, 145
operations, 145
pin, details, 148
operations, 148
Elevating mechanism, U. S. machine gun, 312
Vickers machine gun, 328
Enfield barrel steel, 303
bolt lever, 303
cartridge, 303
rifle, 1917, *303
sight, 303
Extracting mechanism, U. S. machine gun, 308
Extractor, details of, 134
operations on, 134
Extractor collar, details of, 143
operations on, 143
Enfield, 304

Falcon and falconette, 1
Feed box, Vickers machine gun, 323
mechanism, U. S. machine gun, 309
piece, U. S. machine gun, 309
strips, U. S. machine gun, 306
Fermeture nut, U. S. machine gun, 310
Filling plug, Vickers machine gun, 321
Firing action, details of, Vickers machine gun, 325, 326
Lewis machine gun, 316
mechanism, Vickers machine gun, 323
group, U. S. machine gun, 307
pin rod, details, 121
operations, 122
sleeve, details, 130
U. S. machine gun, 313, 314
Fixed base and final barrel operations, 31–40
stud, 20
operations on, 26–31
Flintlock, 1
U. S., *2
Flintlocks, altered, 7
Floor plate, details, 173
operations on, 173
catch, details, 178
operations, 178
Follower, details, 184
operation, 185
Forsyth, percussion ignition, 5
Front sight, details, 189
operations, 190
cover, details, 234
operations, 235

Gage of a gun, 1
Gages for screw driver, 243
and tools for barrel, 14, 24, 40
for base spring, 197
of the bolt, 81–105
for butt plate, 212–216
cap, 216–217
Gages for butt swivel plate, 228
for cocking piece, 124–130
for cut-off, 182–183
for drift slide, 209–210
for ejector, 145–148
for extractor, 134–143
collar, 143–145
for firing pin rod, 121, 122
sleeve, 130
for fixed stud, 26–31
for floor plate, 173–177
catch, 178, 179
for follower, 185–186
for front sight cover, 234
for guard, 156, 167
for leaf, 198–201
for lower band, 224–225
spring, 226–227
swivel, 229–230
for magazine spring, 180
for movable base, 190–195
stud, 187–189
for receiver, 45–80
for safety lock spindle and plunger, 149
thumb piece, 151–154
for sear, 168–170
for sleeve, 106–118
for sleeve lock, 118–121
for slide, 204–206
cap, 206–208
for stocking swivel, 232
for striker, 131–133
for trigger, 171–173
for upper band, 218–223
for windage screw, 211
Gallagher carbine, *6
Gas-cylinder, U. S. machine gun, 306
nozzel ring, U. S. machine gun, 306
Greener bullet, 5
Guard, details, 155
operations, 155
forging for, 156
Gun lock, first, 1
rifling, 1

Hand finishing, handguards, *281
Handguard, bedding machine, *270
clearance for windage screw, *269
clip, details, 233
operations, 234
cutting for bands, *275
to finished length, *269
to length, *269
width, *269
finish turning, 269
grooving, *269
specifications, 269
turning, *269
between bands, *269
U. S. machine gun, 312
windage screw clearance, *275
Handle block, Vickers machine gun, 322

Joselyn carbine, *6

Kittridge, carbine, *6
Krag-Jorgensen rifle, *3, 8

Leaf, details, 198
operations, 198
Legs, Vickers machine gun, 327

Lewis machine gun, details, *317
views of, 318
Lock, Enfield rifle, *303
flint, 1
gun, first, 1
match, 1
Vickers machine gun, 322
wheel, 1
Locking mechanism, U. S. machine gun, 310
Lower band spring, details, 226
operations, 226
swivel, details, 228
operations, 229
Lower bands, details, 224
operation, 223

Magazine charging, Enfield, 304
Lewis machine gun, 316
mechanism, 173
Enfield, *303
rifle, U. S., *3
experimental, *3
spring, 179
details, 180
operations, 180
Mainspring, details of, 133
winding, 133
Match-lock, 1
early form, *1
Mauser system, 8
Maynard carbine, *6
primer, 7
Metal cartridges, first, 5
Movable base, details, 190
operations, 190
stud, details, 187
operations, 188
Musket, American, origin, *5
Charleville, *5
first use of, 1
Hall breech loader, 1831, *2
Springfield, *2
U. S., 1803, *2
U. S. 1805, *2
U. S. 1821, *2
U. S. 1825, *2
Muskctoon of 1842, *2

Needle gun, cartridge, *5
North, Simeon, 7

Oiler and thong case, 238
Operations on stock, 245

Paper cartridges, invented, *5
Parts, list of, Vickers machine gun, 323
of the rifle, 9, 10
Percussion, ignition, *5
Pin-fire cartridge, 5
Pintle, Vickers machine gun, 327
Pomeroy, Lemuel, 7
Primer, Maynard, 7
Profiling fixtures, *257

Quenching mediums, 30

Ramp, U. S. machine gun, 311
Rear sights, U. S. machine gun, 313
Receiver, bedding for, *255
Enfield, *303
Lewis machine gun, 315
operation on, 41, 43, 44–80
U. S. machine gun, 307
Recoil, Vickers machine gun, 322
Regulator, U. S. machine gun, 306
Remington, bolt action, *6
carbine, *6
breech loader of, 1870, *3
Rifle, Enfield sights, 303
mechanism, U. S., *4
Rifled musket, Springfield, 1855, *2
Springfield, 1863, *2
Rifles, U. S. early cost, 7
changes in, 7
Rifling the barrel, 20–24
gun barrels, 1
Rim-fire cartridge, 5
Rod bayonet, *3, 8
Rods for cleaning barrels, 235
handles, 236
Rolling barrels, 11–25
cams for, 25
Rough turn stock, *245

Safety lock and parts, details, 150
operation, 151
spindle and plunger, details, 149
operation, 149
Sawing stock blanks, 251
Screw driver, 241
Sear, details of, 168
operations on, 168
U. S. machine gun, 311
Seat, Vickers machine gun, 327
Shaping machine, stock, *245
Sharp's carbine, *6
Shell, ejection, Enfield, 304
Shots per minute, U. S. machine gun, 305
Sights, Vickers machine gun, 325
Size of stock, 13
Sleeve, details of, 106
operations on, 109
Sleeve lock, details, 118
operations, 118
Slide and cap of sight, details, 202
operations, 204
cap, details, 206
operations, 206
Smith carbine, *6
Smith & Wesson, 5
Snaphaunce gun, 1
Spare parts container, 240
Specification, 9–13
for handguard, 269
Spencer carbine, *3
Springfield, stock specifications, 244
Starr carbine, *6
Starr, Nathan, 7
Steel for forgings, 13
Steels used in rifle, 12
Stock, bedding, *250
centering, 251
first rough turn, *245
hand finishing, *266
shaping machine, 245
operations on, 245
roughing operations, 247
second rough turn, *245
spotting, *245
truck, *246
U. S. machine gun, 311
U. S. specification, 244
Stocking swivel, details, 232
operations, 232
Straightening barrel, 18

Striker, details of, 131
operations on, 132
seat, 85
Stud, fixed, 20
operations on, 26–31
Swivel plate, drilling for, *265

Thong brush, 240
and oiler case, 238
weight, 240
Thumb piece, safety lock, 151
Tools for hand guard clip, 233
Tools and gages for barrel, 14–24, 40
for base spring, 197
of the bolt, 81–105
for butt plate, 212–216
cap, 216–217
for butt swivel plate, 228
for cocking piece, 124–130
for cut-off, 182, 183
for drift slide, 209, 210
for ejector, 145–148
for extractor, 134–143
collar, 143–145
for firing pin rod, 121, 122
sleeve, 130
for fixed stud, 26–31
for floor plate, 173–177
catch, 178, 179
for follower, 185–186
for front sight cover, 234
for guard, 156–167
for leaf, 198–201
for lower band, 224–225
spring, 226–227
swivel, 229–230
for magazine, spring, 180
for movable bases, 190–195
stud, 187–189
for receiver, 45–80
for safety lock spindle and plunger, 149
thumb piece, 151–154
for scar, 168–170
for sleeve, 106–118
lock, 118–121
for slide, 204–206
cap, 206–208
for stocking swivel, 232
Tools and gages for striker, 131–133
for trigger, 171–173
for upper band, 218–223
for windage screw, 211
Trail, Vickers machine gun, 327
Traverse, Vickers machine gun, 327
arc, Vickers machine gun, 328
Trigger, action, U. S. machine gun, 305
details, 171
operations on, 171
Lewis machine gun, 316
Tripod, Vickers machine gun, *321, 327
Truck, stock, *246
Turning on milling machine, 87, 88
stock, 249
Types, bayonets, U. S. *7

U. S. automatic caliber, 305
machine rifle, 1909, 305
machine gun, details, 308
side and top views, *311
rifle mechanism, *4
Upper band, details, 218
operations, 218

Vent, common, 1
Vickers machine gun, 1915, *320
description of, 320
details of, 324
firing action, details of, *325, 326
and tripod, *321
weight, 320
Views of Lewis machine gun, 318

Ward-Burton breech loader, *3
Water jacket, Vickers machine gun, 321
cap, Vickers machine gun, 321
Waters, Asa, 7
Weight, Lewis machine gun, 315
of rifle parts, 12
U. S. machine gun, 305
Vickers machine gun weight, 320
Wheel-lock, invention, 1
Whitney, Eli, 7
Wind gage, U. S. machine gun, 307
Windage screw, details, 211
operations, 211

RETURN TO the circulation desk of any
University of California Library
or to the
NORTHERN REGIONAL LIBRARY FACILITY
Bldg. 400, Richmond Field Station
University of California
Richmond, CA 94804-4698

ALL BOOKS MAY BE RECALLED AFTER 7 DAYS

- 2-month loans may be renewed by calling (510) 642-6753
- 1-year loans may be recharged by bringing books to NRLF
- Renewals and recharges may be made 4 days prior to due date.

DUE AS STAMPED BELOW

SEP 9 1999

SENT ON ILL

MAR 1 8 2002

U. C. BERKELEY

12,000 (11/95)

FORM NO. DD6, UNIVERSITY OF CALIFORNIA, BERKELEY
BERKELEY, CA 94720

JAN 4 1932

GENERAL LIBRARY - U.C. BERKELEY
B000879604
YE 00352
UNIVERSITY OF CALIFORNIA LIBRARY