BEST AVIALABLE COPY

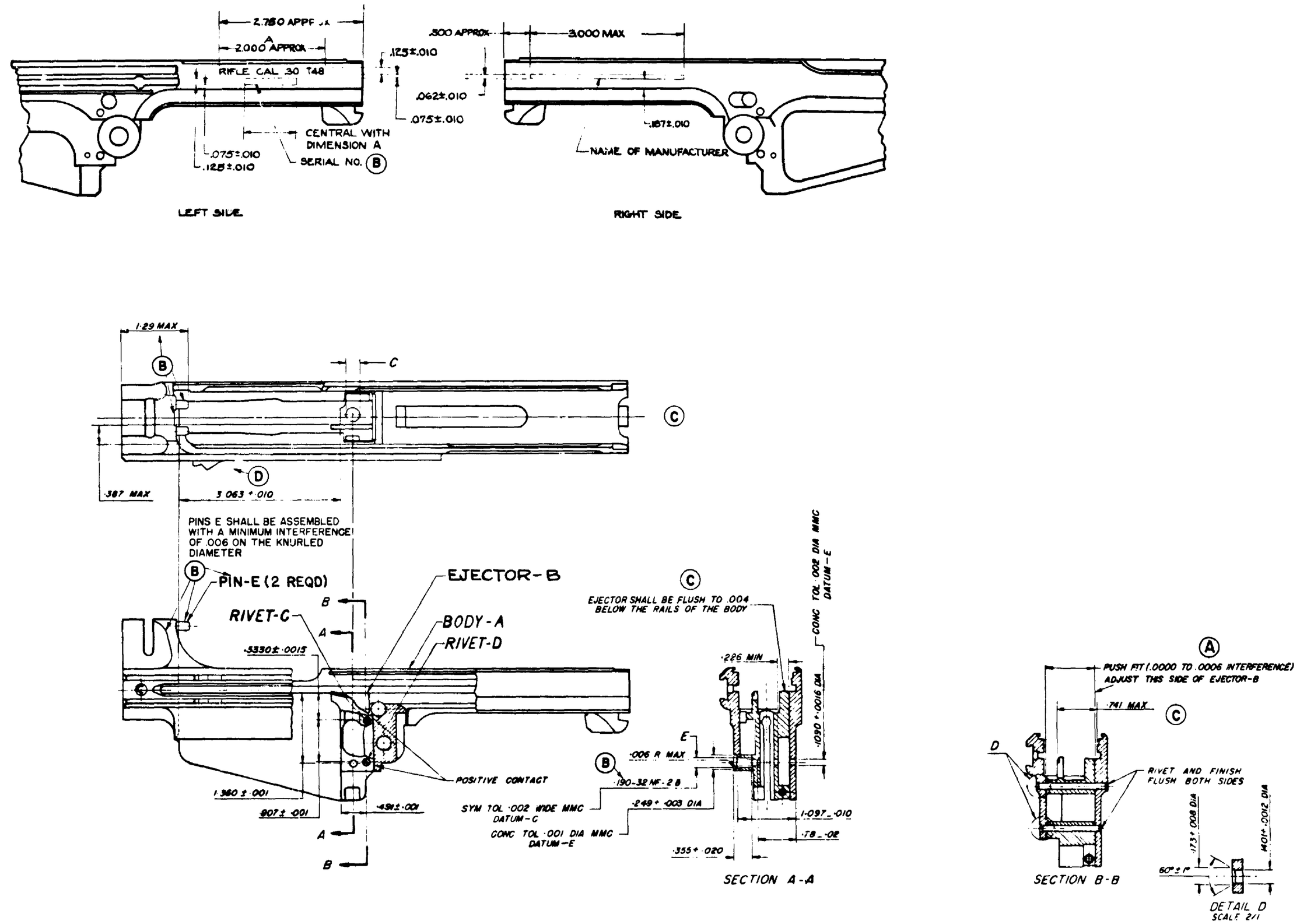

C 125 ALL OVER EXCEPT AS NOTED

NOTICE: THIS DRAWING SHALL NOT BE USED OR REPRODUCED EITHER WHOLLY OR IN PART EXCEPT WHEN AUTHORIZED IN CONNECTION WITH UNITED STATES GOVERNMENT PROCUREMENT.

SYM	DESCRIPTION	DATE	APPROVAL
E	SUPERSEDED BY F7268260 W/C 28 SEP 56	28SEP56	
D2	SEE ECO 23080	26SEP55	
C2	SEE ECO 22519	19MAY55	
B4	SEE ECO 22211	14MAR55	
A3	SEE ECO 22038	11JAN55	

REVISIONS

DWG B7266102 APPLIES

PART NO. 7267490

PHYSICAL PROPERTIES			
TP			
TD			
BL 2			
BA			
SH			
SH	SEE DETAILS		

		RIFLE, CAL
F7267487		30, T48
NEXT ASSY		USED ON
APPLICATION		
DO NOT	APPLY PART NO.	
DO	AS SPECIFIED	

TOLERANCES ON DECIMALS ANGLES ± FRACTIONS ±

MATERIAL: SEE DETAILS

HEAT TREATMENT: BEFORE RIVETING: SEE DETAILS

FINAL PROTECTIVE FINISH: AFTER RIVETING TYPE I, SPEC MIL-C-16232

ORIGINAL DATE OF DRAWING 7DEC54

DRAFTSMAN R.A.C. CHECKED RAD

TRACER R.A.C. CHECKED RAD

ENGINEER

SUBMITTED H. F. Lynch

APPROVED BY ORDER OF THE CHIEF OF ORDNANCE LT COL ORD CORPS

RECEIVER (RIVETED CONSTRUCTION)

SCALE 1/1 UNIT WT

SPRINGFIELD ARMORY ORDNANCE CORPS DEPT OF THE ARMY

DWG SIZE F 7267490

SHEET 1 OF 5

REF: DAD150-3879 CAL5505

F7267490